FRONT RUNNER

CARGO BED SLIDE - SMALL

ENG

SSBS022

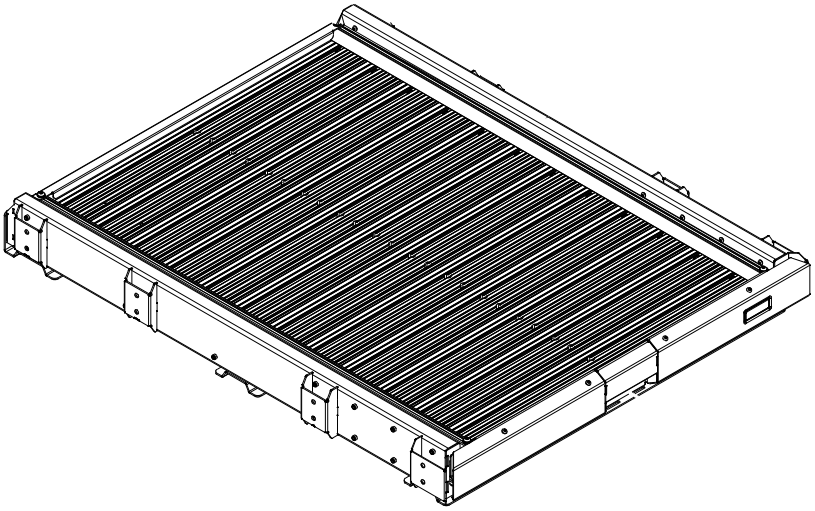

READ ME ! ⚠

Thank you for purchasing a Cargo Bed Slide - Small.

Before you start, take a moment to familiarize yourself with the Fitting Instructions and the included components.

Refer to Page 2 for a list of all the components, quantities and tools required.

IMPORTANT WARNING! ⚠

IT IS CRITICAL THAT ALL FRONT RUNNER PRODUCTS BE PROPERLY AND SECURELY ASSEMBLED AND ATTACHED TO YOUR VEHICLE. IMPROPER ATTACHMENT COULD RESULT IN AN AUTOMOBILE ACCIDENT, AND COULD CAUSE SERIOUS BODILY INJURY OR DEATH. YOU ARE RESPONSIBLE FOR ASSEMBLING AND SECURING ALL FRONT RUNNER PRODUCTS TO YOUR VEHICLE, CHECKING THE ATTACHMENTS PRIOR TO USE, AND PERIODICALLY INSPECTING THE PRODUCTS FOR ADJUSTMENT, WEAR AND DAMAGE. THEREFORE, YOU MUST READ AND UNDERSTAND ALL OF THE INSTRUCTIONS AND PRECAUTIONS SUPPLIED WITH YOUR FRONT RUNNER PRODUCT PRIOR TO INSTALLATION OR USE. IF YOU DO NOT UNDERSTAND ALL OF THE INSTRUCTIONS AND CAUTIONS, OR IF YOU HAVE NO MECHANICAL EXPERIENCE AND ARE NOT THOROUGHLY FAMILIAR WITH THE INSTALLATION PROCEDURES, YOU SHOULD HAVE THE PRODUCT INSTALLED BY A PROFESSIONAL INSTALLER OR OTHER QUALIFIED PERSONNEL.

NOTE: Front Runner will not be responsible for any damage caused by the failure to install the product according to these instructions.
Please call us if you have any questions about the installation of this product.

© 2026 FRONT RUNNER VEHICLE OUTFITTERS

1 GET ORGANIZED

IN THE BOX - BOTTOM FRAME

1	1 X	Side
2	10 X	M6 x 25 Hex Bolt
3	10 X	M6 x 19 x 1 Flat Washer
4	10 X	M6 x 30 x 1 Flat Washer
5	10 X	M6 Nyloc Nut
6	10 X	M6 Rivnut - Long

TOOLS NEEDED

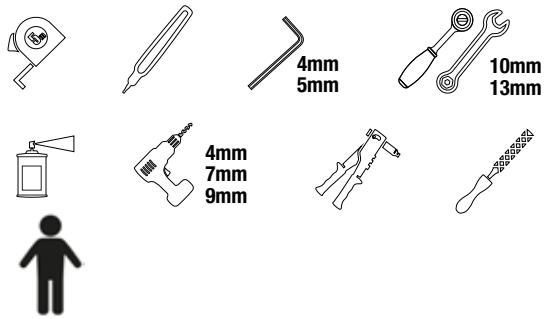

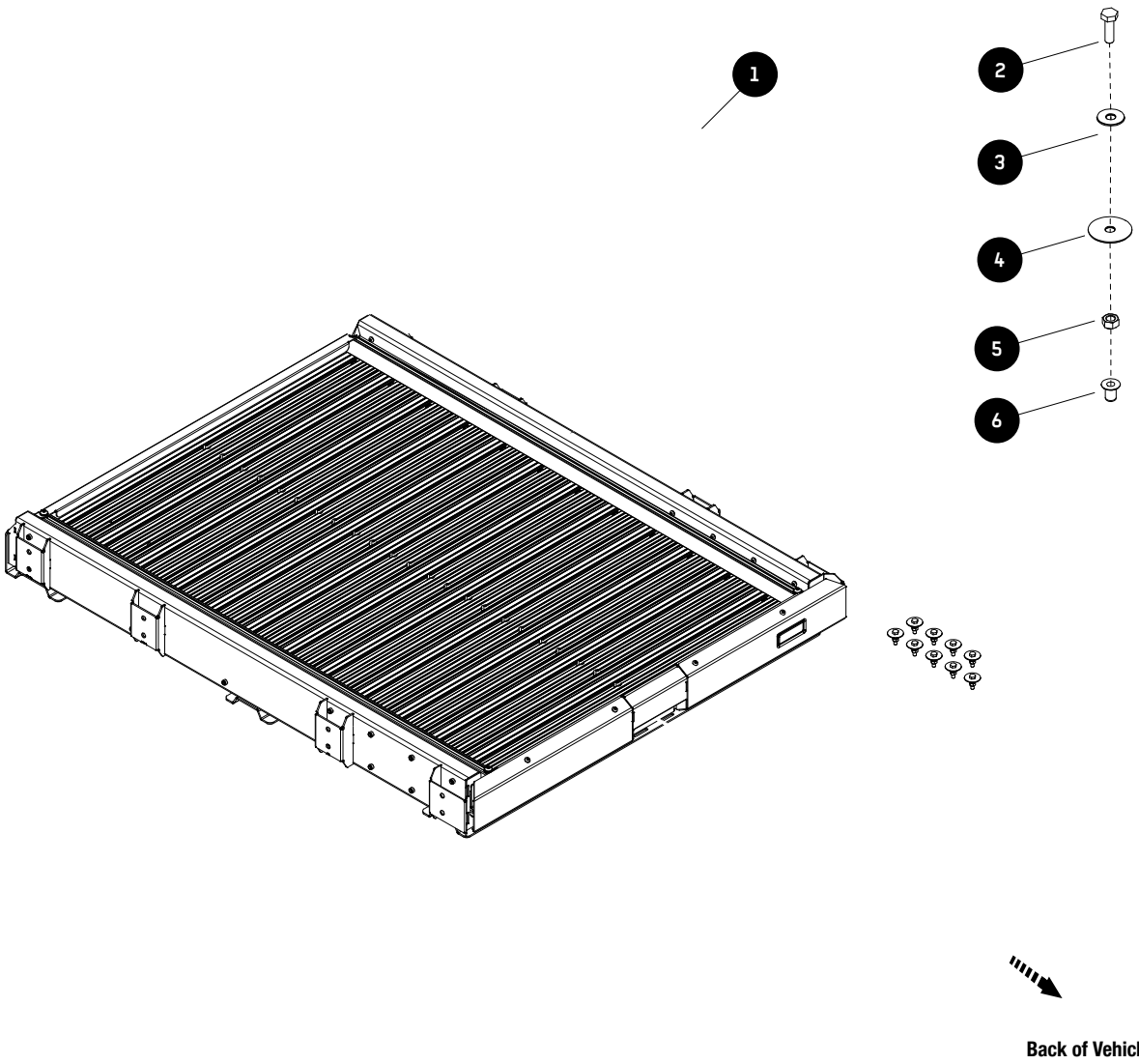

 © 2026 FRONT RUNNER VEHICLE OUTFITTERS

2 FIT & SECURE TO VEHICLE

2.1

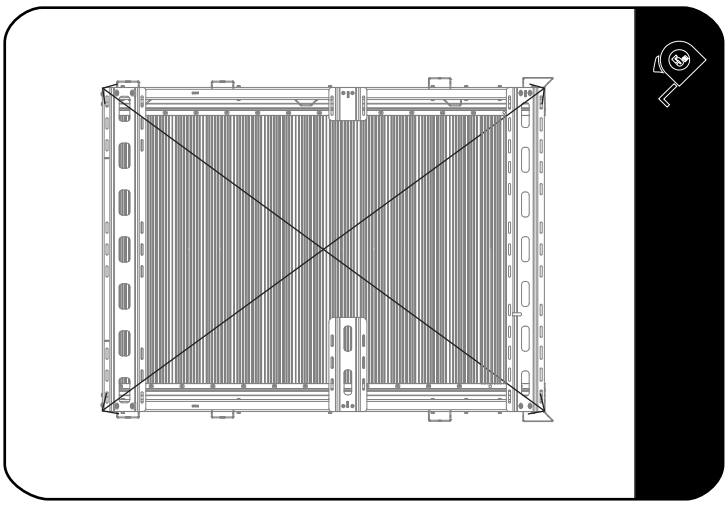

After unpacking and before starting the fitment, measure the Slide as shown. Ensure that the measurements are equal. Reference measurements measured to the same points on each side. If required, adjust the bottom frame.

2.2

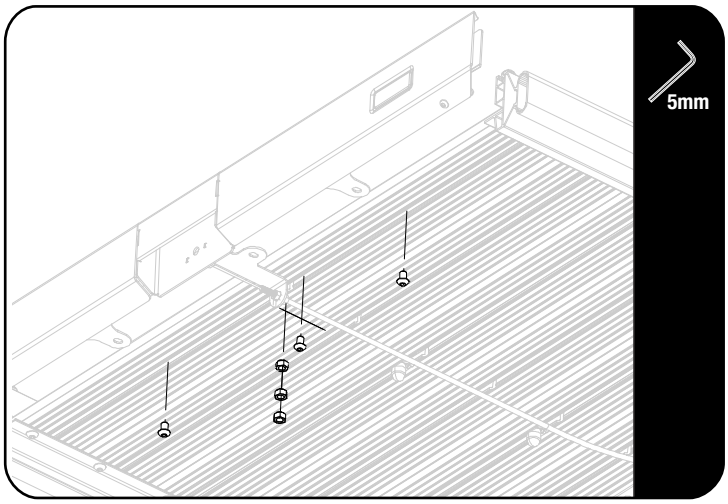

Open the slide and stop it in a locked position, with the brake pin engaged in a brake slot.

Gently remove the Front Mount Plate, without disconnecting the Cable and move aside.

2.3

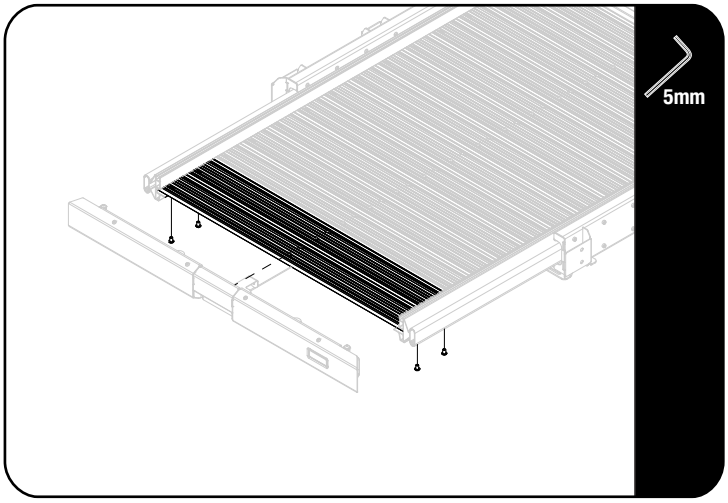

Loosen and remove the two front Slats from the Side Extrusions.

Refit the Front Mount Plate.

© 2026 FRONT RUNNER VEHICLE OUTFITTERS

5 FIT & SECURE TO VEHICLE

2.4

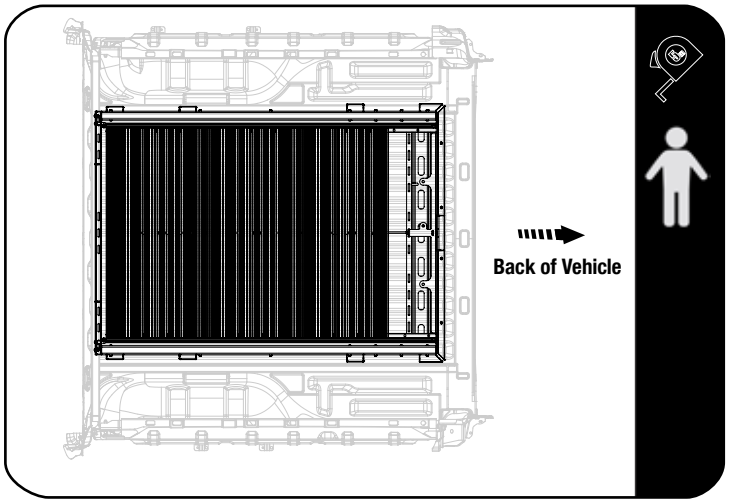

With the help of a friend, position the Slide centrally in the Load Bin, between the wheel arches.

Close the Tail Gate to ensure that it does not make contact with the slide.

Note that two Mounting Options are available. Carefully read through both options to decide which is better suited.

Before drilling, Ensure that no wires, spare wheels or other items are in the way.

2.5

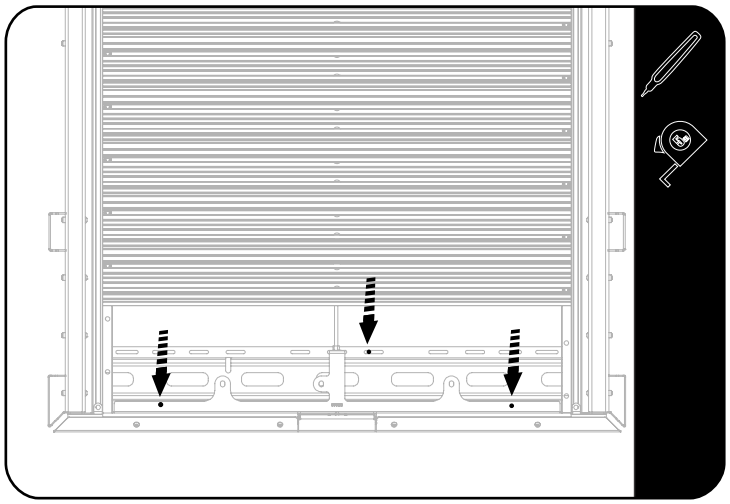

Without moving the Base Assembly, gently slide out the Slide Assembly - +-80mm -, by pulling the Handle to disengage the brake pin, to reveal the Front Strut.

Determine the best positions for the fasteners. Preferrably on top of a rib in the Load Bin and diagonally across from each other.

The Front Support Strut should have three sets of fasteners.

Mark the pre-determined holes as shown in the example.

2.6

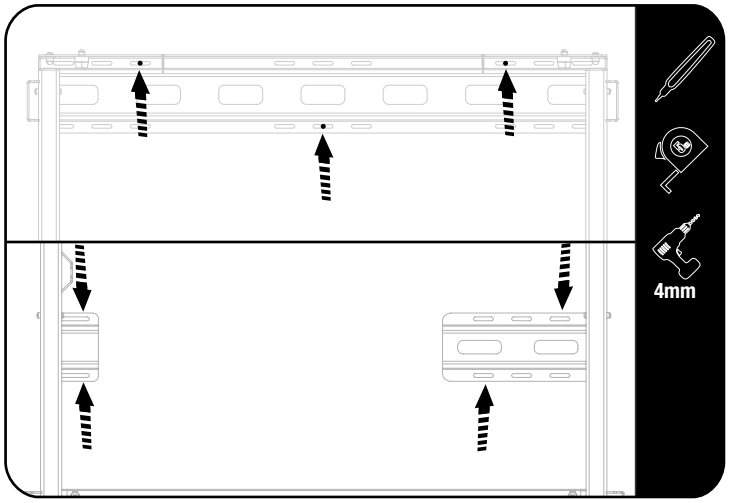

Without moving the Base Assembly, gently slide out the Slide Assembly - first to150mm and then to 900mm - to reveal the Back Stop Assembly and then the Mid Support Struts.

Determine the best positions for the fasteners. Preferrably on top of a rib in the Load Bin and diagonally across from each other.

The Back Stop Assembly should have three sets of fasteners.

The Mid Support Struts should have two sets of fasteners each.

Mark the pre-determined holes as shown in the example.

Remove the entire Assembly from the Load Bin and drill 4mm Pilot Holes where marked. Check the underside of the Load Bin before drilling to Ensure that no components are in the way.

© 2026 FRONT RUNNER VEHICLE OUTFITTERS

5 FIT & SECURE TO VEHICLE

2.7

OPTION 1: Rivnut Installation

Enlarge the Pilot Holes to 9mm, de-burr the holes using a file or countersink tool and apply Anti-Rust on each hole.

Insert and set each M6 Rivnut (Item 6) using a Rivnut Tool.

2.8

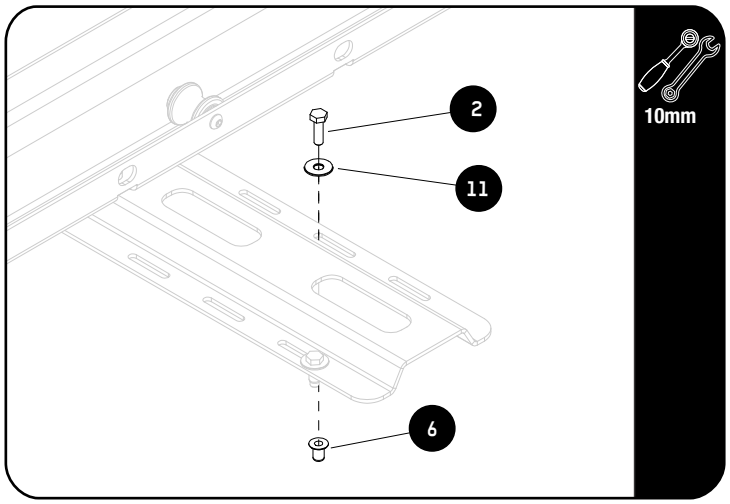

Place the Base Assembly back into the Load Bin, aligning with the Rivnuts.

Secure the Base Assembly using the M6 x 19 x 1 Flat Washers and M6 x 25 Hex Bolts (Items 2 & 3)

Assemble all the fasteners before fully tightening.

<u>Tightening Torque</u>:

M6 : 8-10Nm / 5.9 ft lb - 7.38 ft lb

2.9

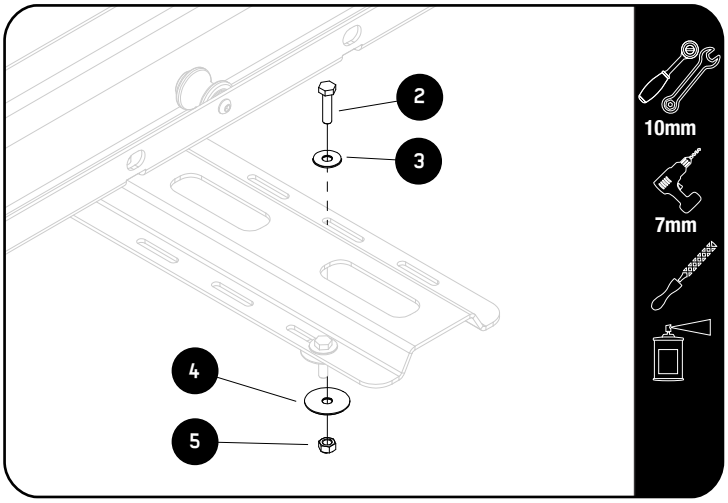

OPTION 2 : Nut & Bolt Installation

Enlarge the Pilot Holes to 7mm, de-burr the holes using a file or countersink tool and apply Anti-Rust on each hole.

Place the Base Assembly back into the Load Bin, aligning with the holes.

Secure the Base Assembly using one M6 x 30 x 1 Flat Washer, one M6 x 19 x 1 Flat Washer, one M6 x 25 Hex Bolt and one M6 Nyloc Nut (Items 2, 3, 4 & 5) per hole.

Assemble all the fasteners before fully tightening.

Note that the fastener order - from the top down - should be Hex Bolt, 19mm Washer, Strut, Load Bin, 30mm Washer, Nyloc Nut.

<u>Tightening Torque</u>:

M6 : 8-10Nm / 5.9 ft lb - 7.38 ft lb

© 2026 FRONT RUNNER VEHICLE OUTFITTERS

6 FINAL ASSEMBLY

2.10

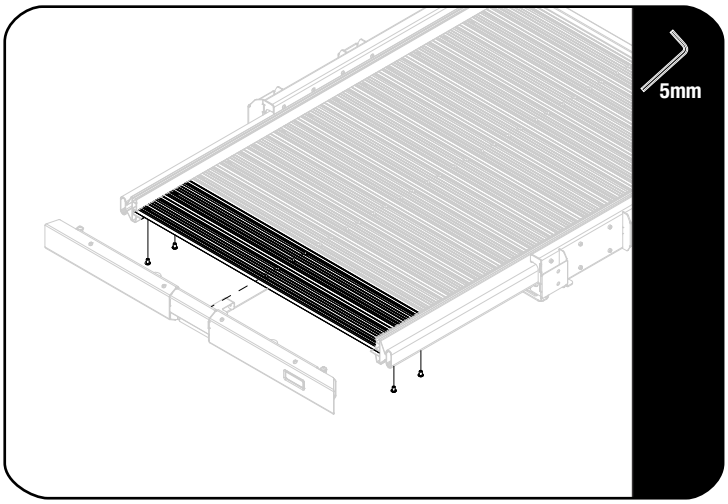

Gently remove the Front Mount Plate, without disconnecting the Cable and move aside.

Slide the two Slats removed in Step 2.2 back in the correct orientation into the Side Extrusions and secure.

Tightening Torque:

M8 : 15-20Nm / 11.06 ft lb - 14.75 ft lb

2.11

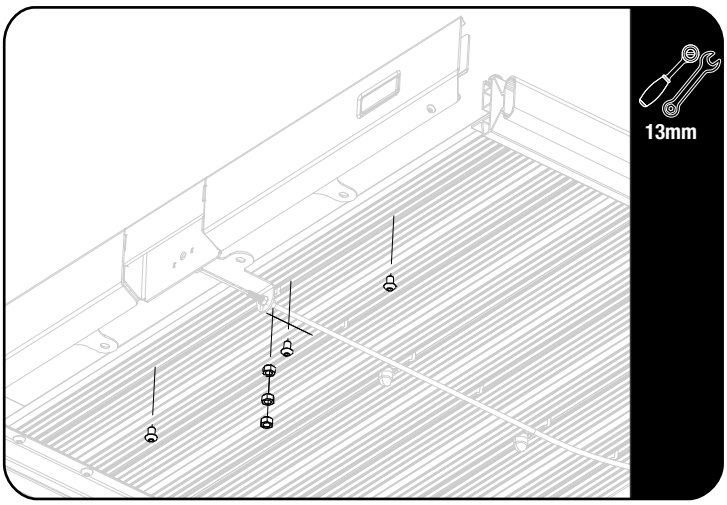

Looking from the rear behind the tailgate, refit the Front Mount Plate in the Side Extrusion (Silver)T-Slots and fully secure.

Tightening Torque:

M8 : 15-20Nm / 11.06 ft lb - 14.75 ft lb

© 2026 FRONT RUNNER VEHICLE OUTFITTERS

7 OPERATION

3.1

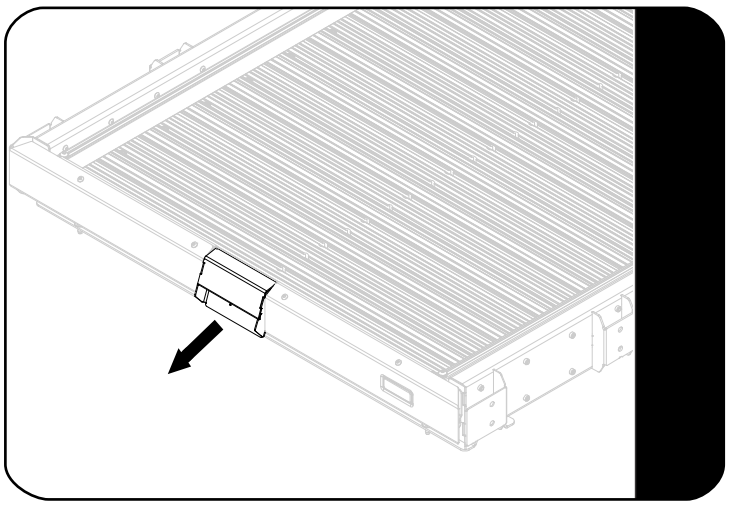

Pull the Handle upwards and towards you and keep it there to release the brake pin on the latch. In a smooth motion pull out the slide.

If released, the brake pin will find the closest brake slot in the Side Wheel assembly and stop the slide from moving any further, as shown in the next step.

3.2

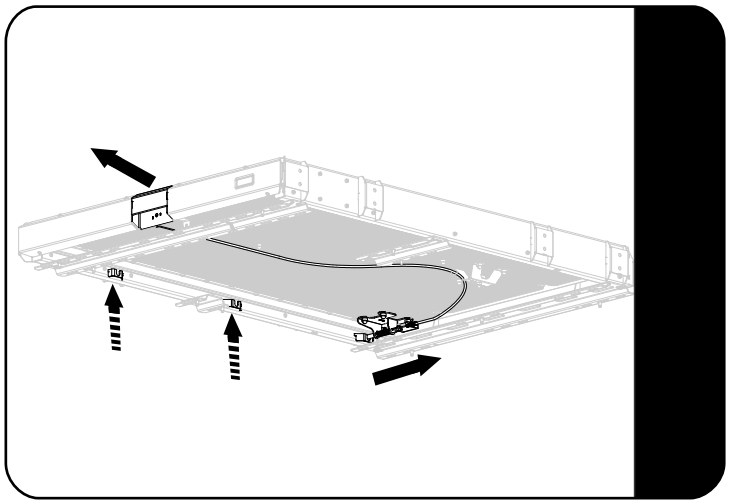

3.3

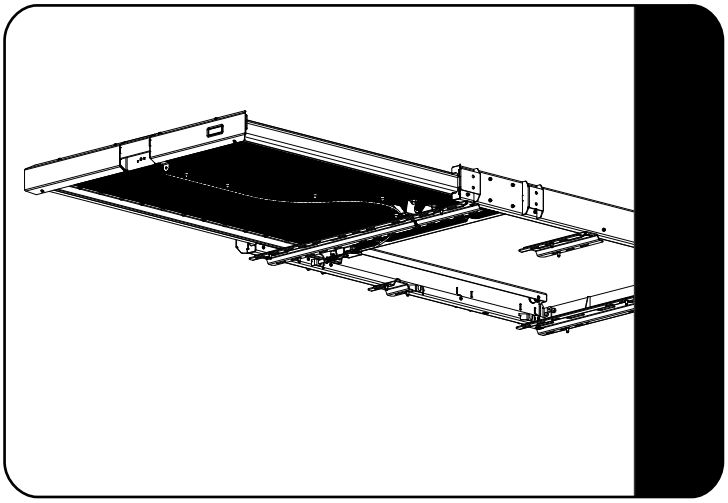

Fully Open position orientated to show the bottom.

© 2026 FRONT RUNNER VEHICLE OUTFITTERS

4 COMPLETION

4.1 Congratulations! You did it. Take a step back and admire your work!

5 TAKE A TRIP

After your first trip, check that all nuts, bolts, screws and fittings are tight. Re-tighten where needed.
You will find a small amount of settling has happend.

Before going on a trip, check if the nuts, bolts, screws or fittings need to be re-torqued.

6 INSTALL OTHER VEHICLE AND RACK ACCESSORIES

Now's the time to visit your favorite Front Runner dealer in person or online.

IMPORTANT!

FRONT RUNNER RACK KITS OFTEN HAVE A HIGHER LOAD RATING THAN THE VEHICLES THEY ARE MOUNTED TO. PLEASE REFER TO YOUR SPECIFIC VEHICLE MANUFACTURER FOR A RECOMMENDED ROOF RATING. FRONT RUNNER CANNOT BE RESPONSIBLE FOR IMPROPER LOADING BEYOND THE VEHICLE MANUFACTURER'S STATED LOAD CAPACITY.

Be sure to tag us. We love to see our gear in action! #FrontRunnerOutfitters

Share your adventures on:

© 2026 FRONT RUNNER VEHICLE OUTFITTERS