FRONT RUNNER

CARGO BED SLIDE KIT- MEDIUM

ENG

SSBS017

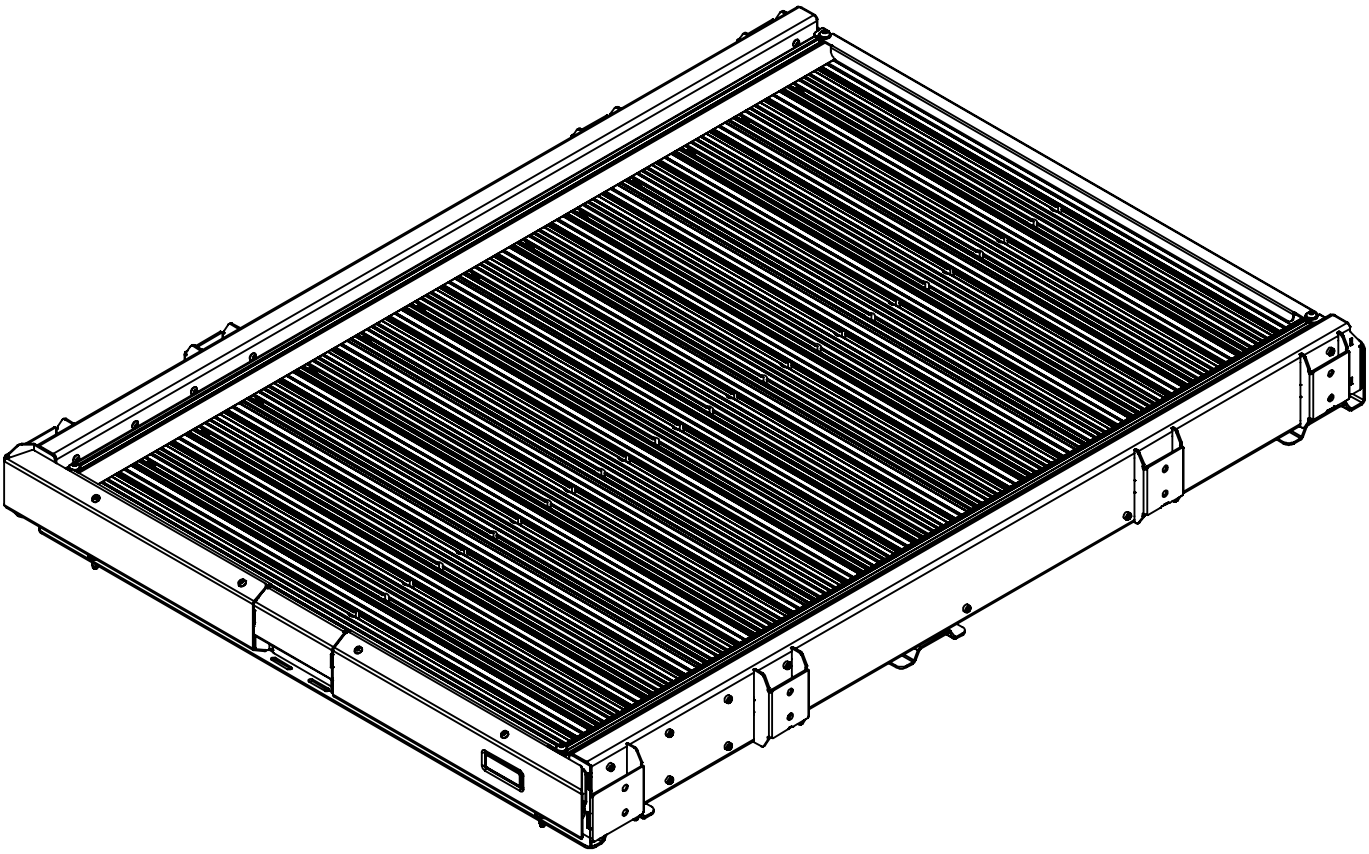

READ ME ! ⚠

Thank you for purchasing a Cargo Bed Slide - Medium.

Before you start, take a moment to familiarize yourself with the Fitting Instructions and the included components.

Refer to Page 2 for a list of all the components, quantities and tools required.

IMPORTANT WARNING! ⚠

IT IS CRITICAL THAT ALL FRONT RUNNER PRODUCTS BE PROPERLY AND SECURELY ASSEMBLED AND ATTACHED TO YOUR VEHICLE. IMPROPER ATTACHMENT COULD RESULT IN AN AUTOMOBILE ACCIDENT, AND COULD CAUSE SERIOUS BODILY INJURY OR DEATH. YOU ARE RESPONSIBLE FOR ASSEMBLING AND SECURING ALL FRONT RUNNER PRODUCTS TO YOUR VEHICLE, CHECKING THE ATTACHMENTS PRIOR TO USE, AND PERIODICALLY INSPECTING THE PRODUCTS FOR ADJUSTMENT, WEAR AND DAMAGE. THEREFORE, YOU MUST READ AND UNDERSTAND ALL OF THE INSTRUCTIONS AND PRECAUTIONS SUPPLIED WITH YOUR FRONT RUNNER PRODUCT PRIOR TO INSTALLATION OR USE. IF YOU DO NOT UNDERSTAND ALL OF THE INSTRUCTIONS AND CAUTIONS, OR IF YOU HAVE NO MECHANICAL EXPERIENCE AND ARE NOT THOROUGHLY FAMILIAR WITH THE INSTALLATION PROCEDURES, YOU SHOULD HAVE THE PRODUCT INSTALLED BY A PROFESSIONAL INSTALLER OR OTHER QUALIFIED PERSONNEL.

NOTE: Front Runner will not be responsible for any damage caused by the failure to install the product according to these instructions.
Please call us if you have any questions about the installation of this product.

© 2026 FRONT RUNNER VEHICLE OUTFITTERS

1 GET ORGANIZED

IN THE BOX - BOTTOM FRAME

1	1 X	Side Wheel Assembly - Braked
2	1 X	Side Wheel Assembly - Non-braked
3	1 X	Back Stop Assembly
4	1 X	Front Support Strut
5	1 X	Short Mid Support
6	1 X	Mid Support Strut
7	12 X	M6 x 12 Button Head Bolt
8	10 X	M6 x 16 Button Head Bolt
9	10 X	M6 Rivnut - Long
10	8 X	M6 x 12 x 1 Flat Washer
11	14 X	M6 x 19 x 1 Flat Washer
12	10 X	M6 x 30 x 1 Flat Washer
13	10 X	M6 x 20 Hex Bolt
14	10 X	M6 x 25 Hex Bolt
15	4 X	M6 Nut Cap
16	14 X	M6 Nyloc Nut

TOOLS NEEDED

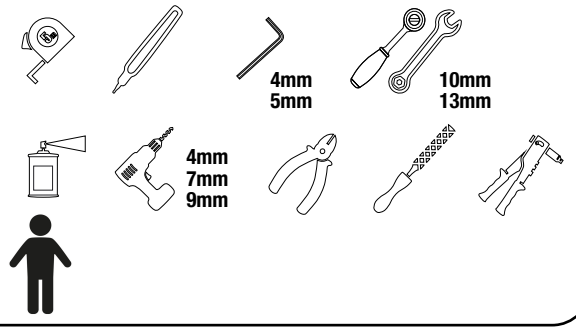

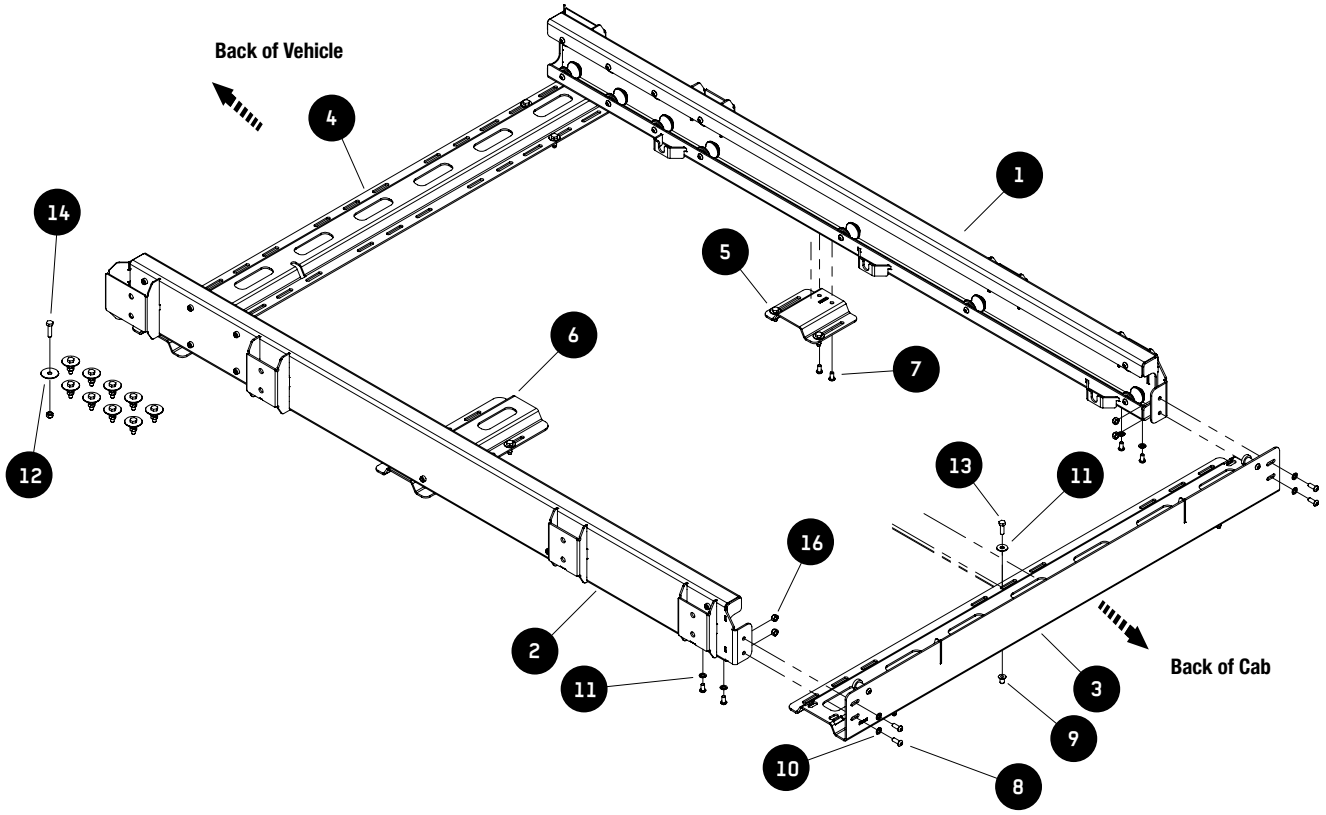

 © 2026 FRONT RUNNER VEHICLE OUTFITTERS

1 GET ORGANIZED

IN THE BOX - TRAY

1	2 X	Side Extrusion (Silver)
2	14 X	Slat (Black)
3	1 X	Front Mount Plate & Handle Assembly
4	1 X	Back Plate
5	1 X	Hard Stop Assembly
6	5 X	Cable Clamp
7	1 X	Latch Assembly
8	1 X	Measuring Jig - Long
9	1 X	Measuring Jig - Short
10	1 X	Cable (1.7m Long, 5mm Outer Tube 1.5mm Wire)
11	2 X	Cable Adjuster for 5mm Cable
12	1 X	Cable End Anchor
13	2 X	M6 Nut
14	33 X	M8 x 12 Button Head Bolt
15	4 X	M8 x 16 Button Head Bolt
16	1 X	M6 x 12 x 1 Flat Washer
17	4 X	M8 x 16 x 1.6 Flat Washer

IN THE BOX - TRAY

18	15 X	M8 x 16 Hex Bolt
19	15 X	M8 Nut Cap
20	53 X	M8 Nyloc Nut
21	5 X	Zip Tie (Cable Tie)
22	1 X	Thread Locker

TOOLS NEEDED

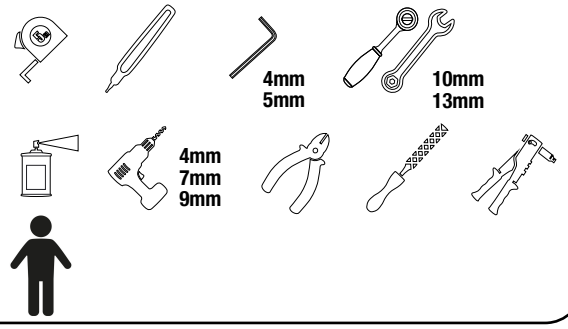

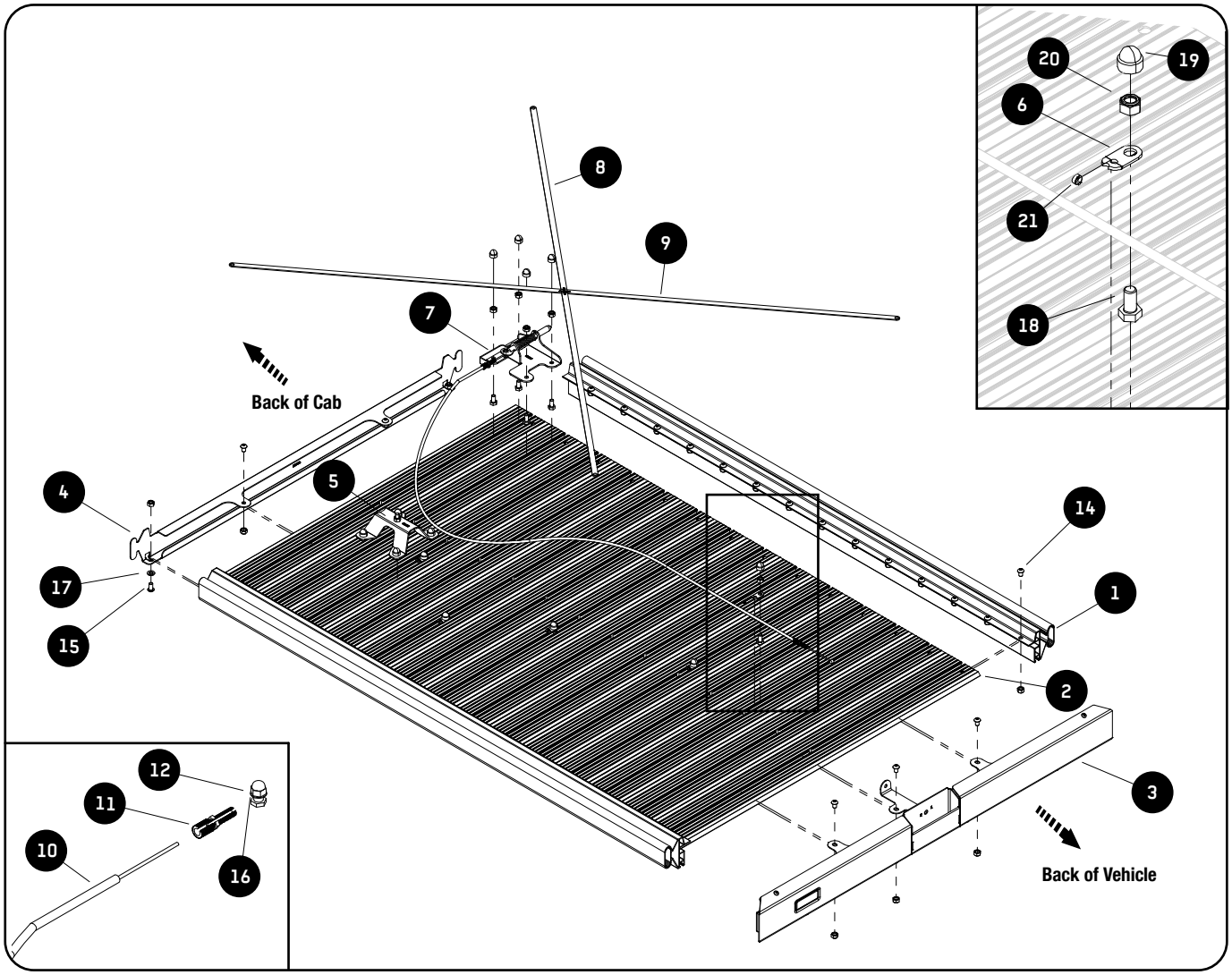

 © 2026 FRONT RUNNER VEHICLE OUTFITTERS

2 PRE-ASSEMBLY - TRAY

2.1

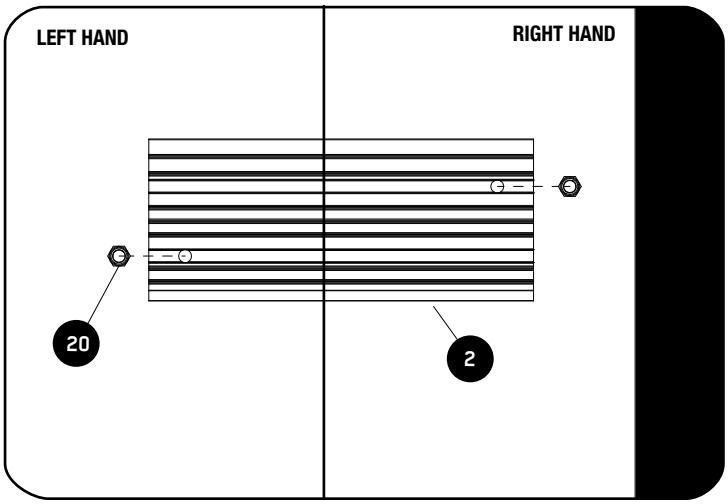

Assemble the Slat (Black) (Item 2) and one M8 Nyloc Nut (Item 20) - with the blue side of the nut facing you - on each side, by sliding the Nuts into the T-Slots diagonally, as shown.

2.2

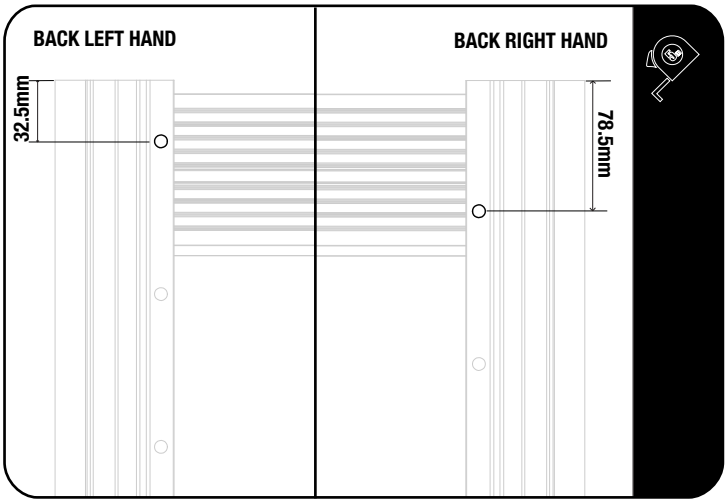

When assembling the Slats to the Side Extrusions (Silver) (Item 1), take note of the fastener orientation, as shown in the figure, viewed from the bottom.

2.3

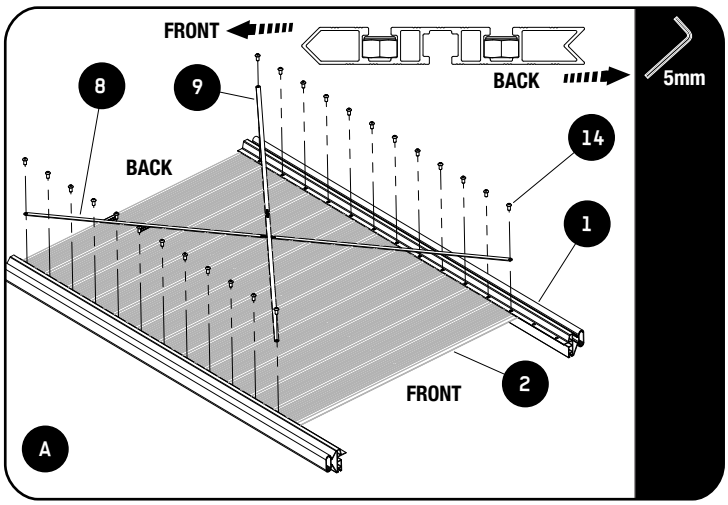

Assemble the back twelve Slats (Black) (Item 2) and temporarily fit the two Measuring Jigs - marked L & S - (Items 8 & 9) in the correct orientations and secure them to the Side Extrusions (Silver) (Item 1) using the appropriate holes, with one M8 x 12 Button Head Bolt (Item 14) per side - from the bottom, the order should be Bolt, Extrusion, Bottom of Slat, Nyloc Nut.

Tightening Torque:

M8 : 15-20Nm / 11.06 ft lb - 14.75 ft lb

© 2026 FRONT RUNNER VEHICLE OUTFITTERS

2 PRE-ASSEMBLY - TRAY

2.4

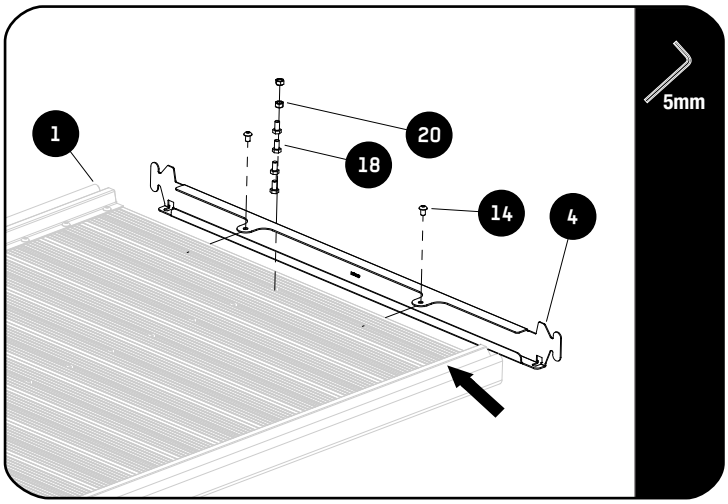

With the slide still in the upside down position, load four M8 x 16 Hex Bolts first - to be used in Step 4.5 - and two M8 Nyloc Nuts (Items 20 & 18) into the pocket in the T-Slot and align the Nuts with the holes on the Back Plate (Item 4) . Slide the Hex Bolts out of the way, as indicated by the arrow. Secure to the Slat using M8 x 12 Button Head Bolts (Item 14).

Fully tighten fasteners.

Tightening Torque:

M8 : 15-20Nm / 11.06 ft lb - 14.75 ft lb

2.5

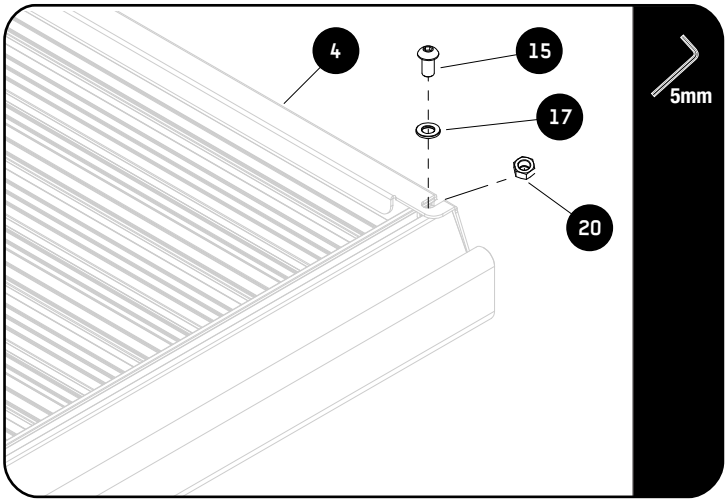

Flip the slide over and secure the Back Plate (Item 4) to the Side Extrusions (Silver) (Item 1) using M8 x 16 Button Head Bolts, M8 x 16 x 1.6 Flat Washers and M8 Nyloc Nuts (Items 15, 17 & 20).

Fully tighten fasteners.

Tightening Torque:

M8 : 15-20Nm / 11.06 ft lb - 14.75 ft lb

 © 2026 FRONT RUNNER VEHICLE OUTFITTERS

3 PRE-ASSEMBLY - BOTTOM FRAME

3.1

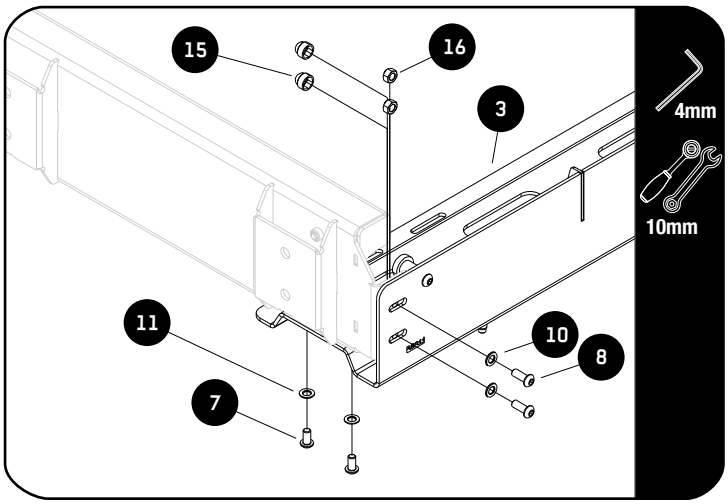

Assemble the bottom of the Back Stop Assembly (Item 3) to the bottom of each Side Wheel Assembly (Items 1 & 2) using two M6 x 19 x 1 Flat Washers and two M6 x 12 Button Head Bolts (Items 11 & 7), per side. Do not fully tighten.

Assemble the back of the Back Stop Assembly (Item 3) to the tabs on the Side Wheel Assemblies (Items 1 & 2) using two M6 x 16 Button Head Bolts, two M6 x 12 x 1 Flat Washers and two M6 Nyloc Nuts (Items 8, 10 & 16), per side.Do not fully tighten.

Take note of position of the M6 Nut Caps (Item 15) - do not fit them yet.

3.2

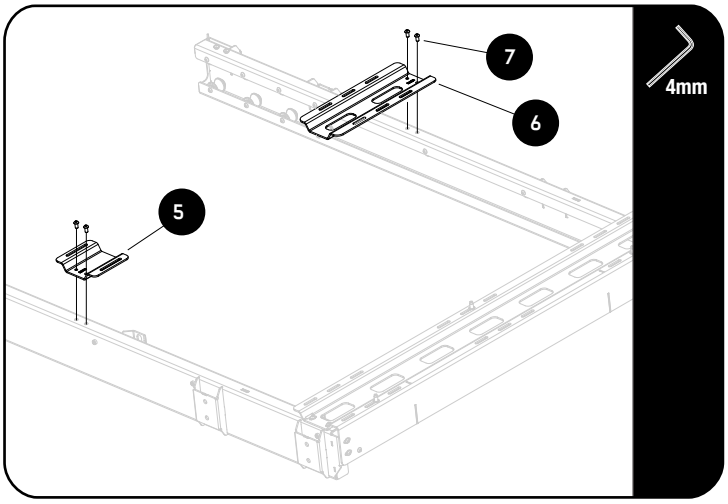

Flipping the frame over, the Short Mid- and Mid Support Struts (Items 5 & 6) to the Bottom Frame, using two M6 x 12 Button Head Bolts (Item 7) per side.

Do not Fully Tighten.

3.3

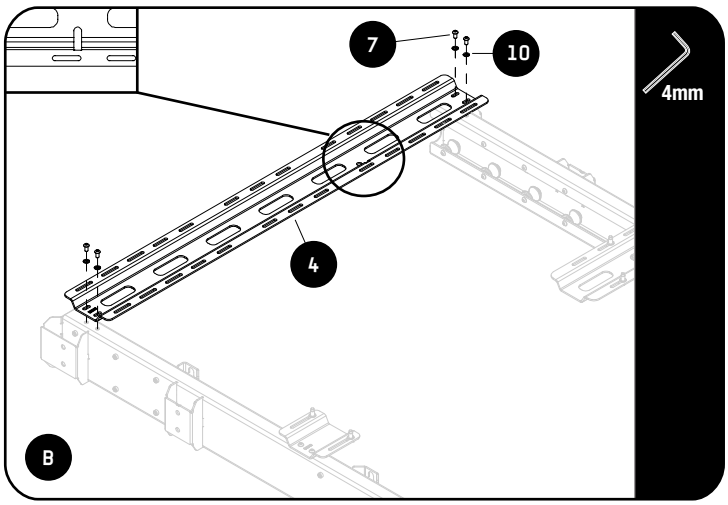

Secure the Front Support Strut (Item 4) to the Bottom Frame, using two M6 x 12 x 1 Flat Washers and two M6 x 12 Button Head Bolts (Items 10 & 7), per side.

Do not Fully Tighten.

Note the position of the Hard Stop Slot

© 2026 FRONT RUNNER VEHICLE OUTFITTERS

4 PRE-ASSEMBLY - SLIDE

4.1

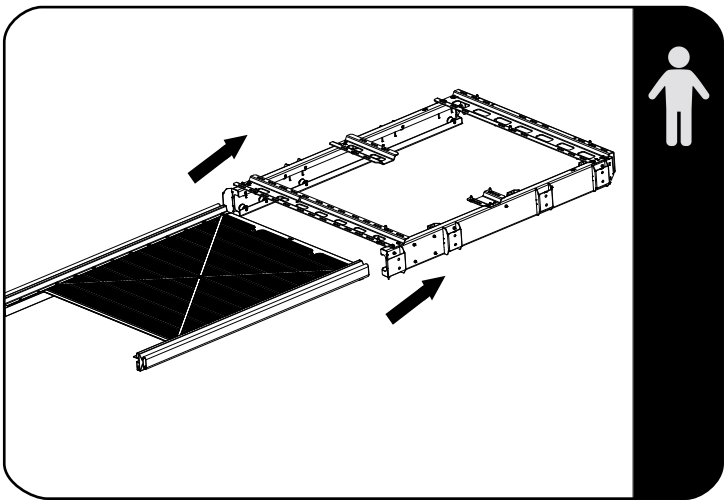

Assemble the Tray Assembly from Step 2.5 into the Bottom Frame Assembly from Step 3.3 - noting the shape of the wheels and the Side Extrusions.

4.2

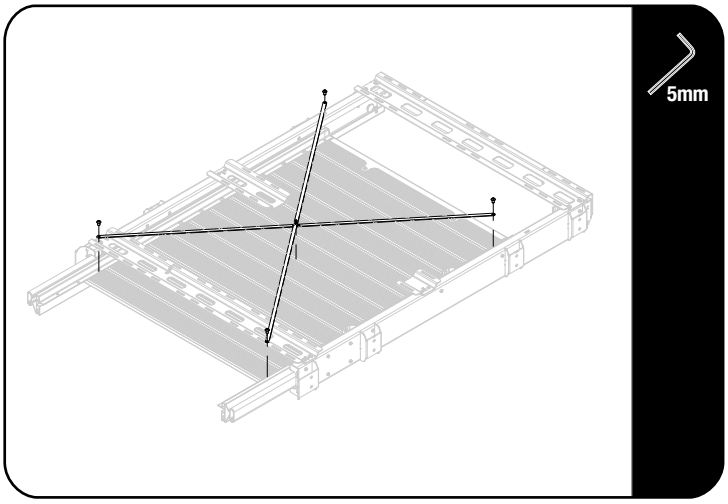

Before pushing the slide in completely, remove the two Measuring Jigs, refit the bolts and fully tighten the slats in place.

Push the slide into the fully closed position against the back stop.

Tightening Torque:

M8 : 15-20Nm / 11.06 ft lb - 14.75 ft lb

4.3

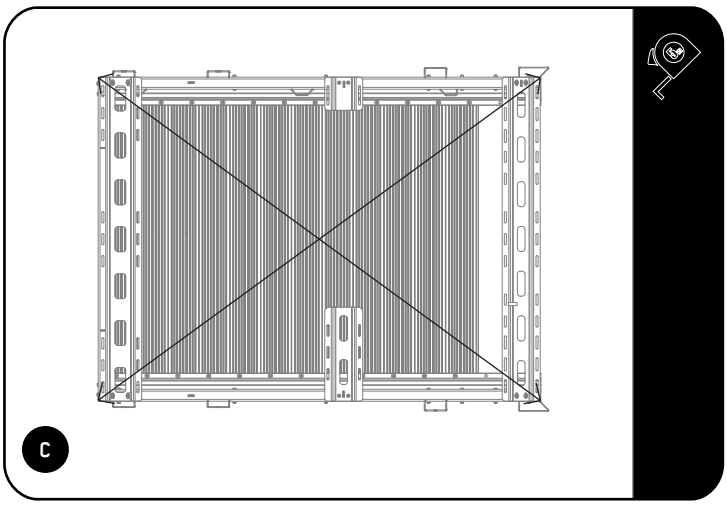

Measure the complete assembly as shown, and ensure that the measurements are equal. Reference measurements measured to the same points on each side. If required, adjust the bottom frame.

Fully tighten all fasteners inserted in Steps 3.1 - 3.3 and place Nut Caps where indicated in previous steps.

Tightening Torque:

M8 : 15-20Nm / 11.06 ft lb - 14.75 ft lb

Tightening Torque:

M6 : 8-10Nm / 5.9 ft lb - 7.38 ft lb

© 2026 FRONT RUNNER VEHICLE OUTFITTERS

4 PRE-ASSEMBLY - SLIDE

4.4

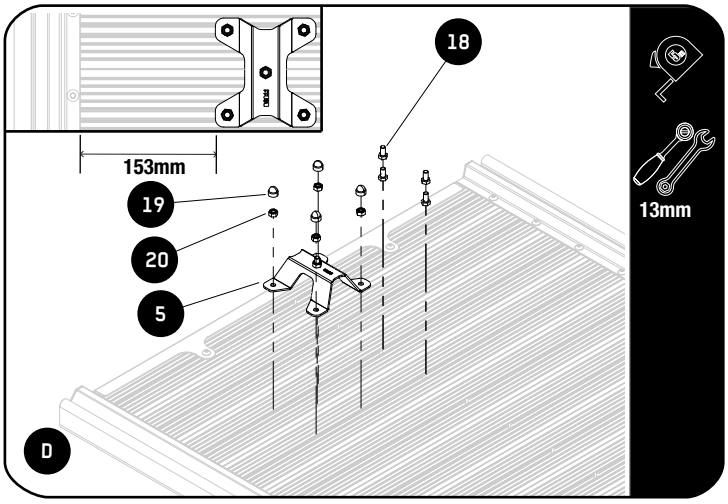

Keep the slide facing down for now.

Counting from the back, position the Hard Stop (Item 5) 153mm away from the edge of the Left Hand Side Extrusion, on the 3rd and 4th Slats from the back.

Preload four M8 x 16 Hex Bolts (Item 18) into the pockets of the aforementioned slats and secure the Hard Stop using four M8 Nyloc Nuts (Item 20).

Open the slide and check the position of the Hard Stop in the slot in the Front Strut - see Step 3.3, ensuring that they align. Fully tighten the fasteners and place M8 Nut Caps (Item 19) over the M8 Nyloc Nuts.

Tightening Torque:

M8 : 15-20Nm / 11.06 ft lb - 14.75 ft lb

4.5

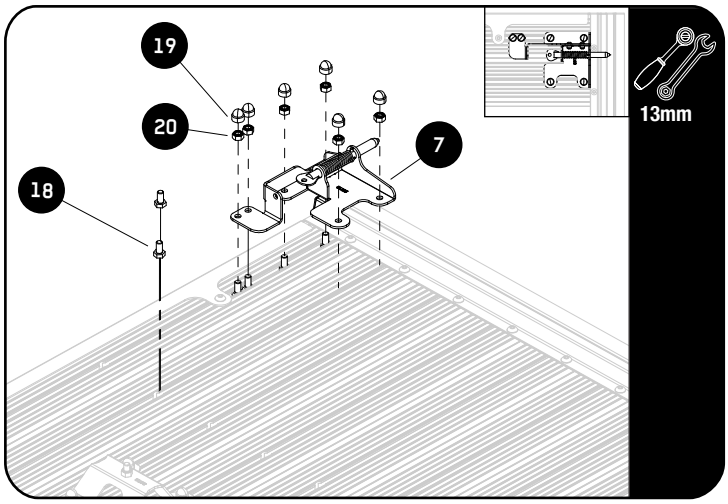

Preload two M8 x 16 Hex Bolts (Item 18) each into the pocket of the 2nd last slat (Black) from the back, as described in the previous steps. Utilizing the four Hex Bolts pre-loaded in Step 2.4, secure the Latch Assembly (Item 7) against the Extrusion (Silver), using six M8 Nyloc Nuts (Item 20).

Tighten the fasteners and place six M8 Nut Caps (Item 19) on the M8 Nyloc Nuts.

Tightening Torque:

M8 : 15-20Nm / 11.06 ft lb - 14.75 ft lb

4.6

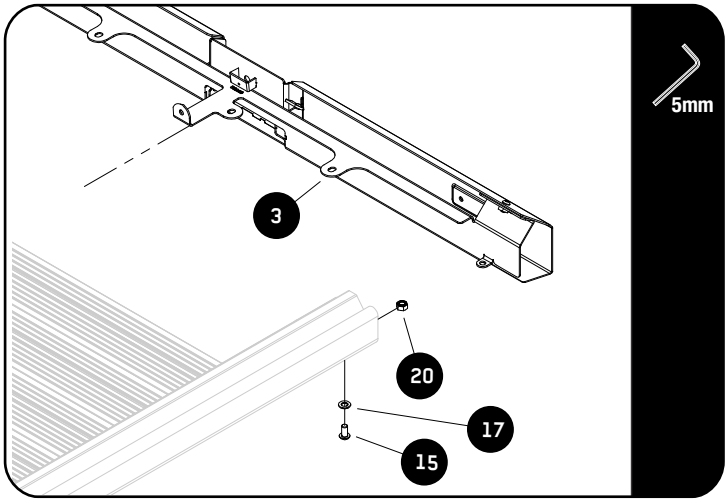

Temporarily attach the Front Mount Assembly (Item 3) to the Tray using the top two tags. Slide an M8 Nyloc Nut (Item 20) into the T-Slot on top of each Extrusion. Slide the tags over the Extrusion (Silver)and secure using a M8 x 16 x 1.6 Flat Washer and M8 x 16 Button Head Bolt (Items 17 & 15).

Temporarily tighten.

 © 2026 FRONT RUNNER VEHICLE OUTFITTERS

4 PRE-ASSEMBLY - SLIDE

4.7

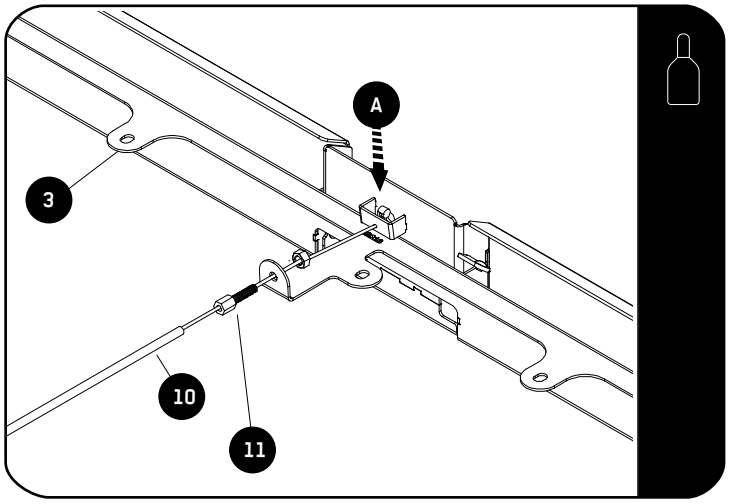

Assemble the Cable (Item 10) to the Front Mount Assembly (Item 3), by threading the wire inner through the hole in the Handle and the small hole on the bracket (A) behind as well as the arm, as shown.

Next, thread the wire inner through the Cable Adjuster (Item 11) and attach the Adjuster to the arm - apply a bead of Loctite to the Adjuster before tightening the Nut fully. Thread the wire inner through one outer finisher, then the black cable outer, and trough the other outer finisher.

4.8

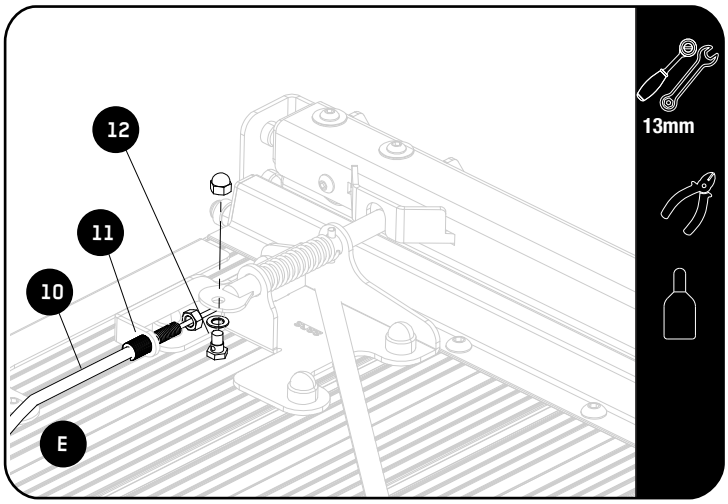

Secure the remaining Cable Adjuster (Item 11) to the Latch - apply a bead of Loctite to the Adjuster before tightening the nut fully - and thread the Wire Inner of the Cable Assembly (Item 10) through Cable Adjuster, then through the hole of the Cable Anchor (Item 12). Secure the Anchor to the Pin - apply a bead of Loctite to the Anchor before tightening - and pull the wire inner tight while pulling back the pin a little (3-5mm), for pre-tension. Ensure the handle is fully closed and there's no slack in the cable inner and that the outer is properly located in the cable anchors. Fully tighten the fasteners to keep the wire tight and in place.

Test the Handle lightly to Ensure that enough resistance is present and that the handle retracts the Pin. Ensure that the Cable ends stay in place.

<u>Tightening Torque</u>:

M8 : 15-20Nm / 11.06 ft lb - 14.75 ft lb

4.9

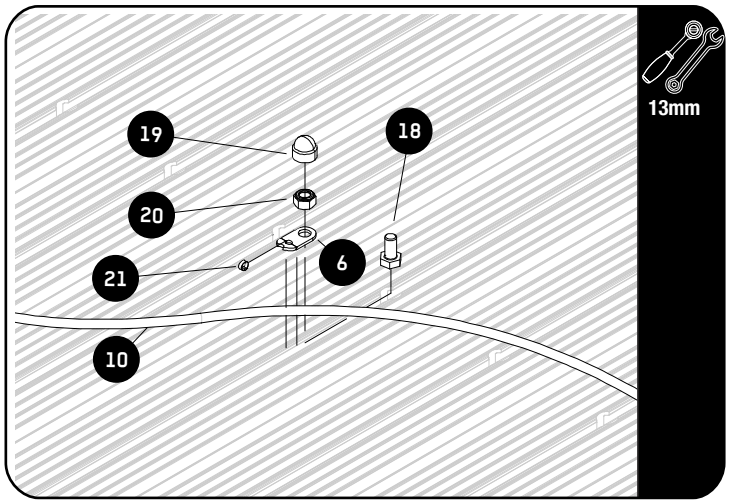

Attach the five Cable Clamps (Item 6) to the Cable (Item 10) using Zip Ties (Cable Ties) (Item 21), thread the Zip Tie (Cable Tie) through the small hole on the Cable Clamp and into the notch to keep it in place. Do not tighten or trim the Zip Ties (Cable Ties), the cable should be able to slide freely.

Align the Cable Clamps at 90 degrees to the Cable. Secure the Cable clamps at various evenly spaced out points on the tray so the cable form a loose loop, using a M8 x 16 Hex Bolt and M8 Nyloc Nut (Items 18 & 20). Ensure the cable follows a relaxed path with no sharp bends.

Fully tighten fasteners and Place M8 Nut Caps (Item 19) on all Nyloc Nuts. Tighten all Zip Ties (Cable Ties) trim the after securing the Cable.

<u>Tightening Torque</u>:

M8 : 15-20Nm / 11.06 ft lb - 14.75 ft lb

 © 2026 FRONT RUNNER VEHICLE OUTFITTERS

5 FIT & SECURE TO VEHICLE

5.1

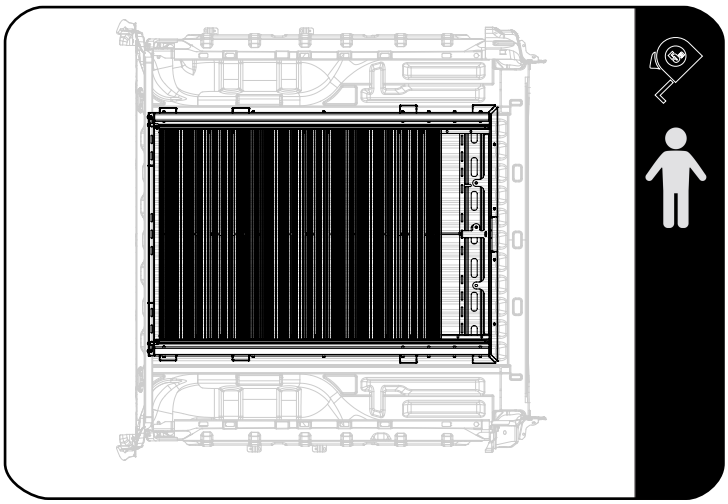

With the help of a friend, position the Slide centrally in the Load Bin, between the wheel arches.

Close the Tail Gate to ensure that it does not make contact with the slide.

Note that two Mounting Options are available. Carefully read through both options to decide which is better suited.

Before drilling, Ensure that no wires, spare wheels or other items are in the way.

5.2

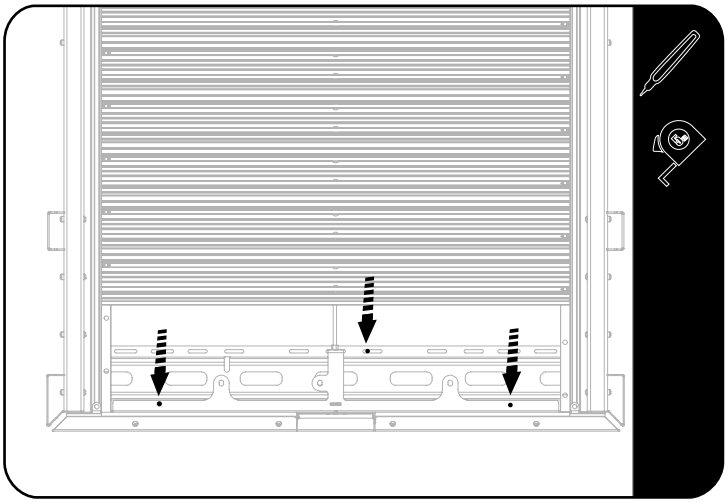

Without moving the Base Assembly, gently slide out the Slide Assembly - +-80mm -, by pulling the Handle to disengage the brake pin, to reveal the Front Strut.

Determine the best positions for the fasteners. Preferrably on top of a rib in the Load Bin and diagonally across from each other.

The Front Support Strut should have three sets of fasteners.

Mark the pre-determined holes as shown in the example.

5.3

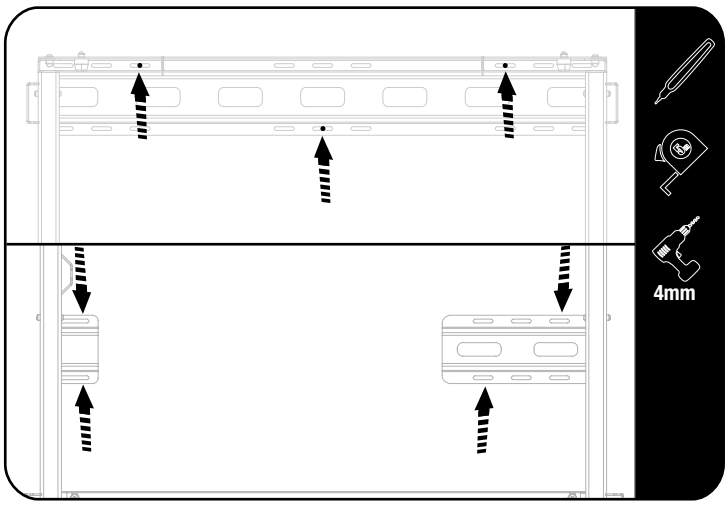

Without moving the Base Assembly, gently slide out the Slide Assembly - first to150mm and then to 900mm - to reveal the Back Stop Assembly and then the Mid Support Struts.

Determine the best positions for the fasteners. Preferrably on top of a rib in the Load Bin and diagonally across from each other.

The Back Stop Assembly should have three sets of fasteners.

The Mid Support Struts should have two sets of fasteners each.

Mark the pre-determined holes as shown in the example.

Remove the entire Assembly from the Load Bin and drill 4mm Pilot Holes where marked. Check the underside of the Load Bin before drilling to Ensure that no components are in the way.

© 2026 FRONT RUNNER VEHICLE OUTFITTERS

5 FIT & SECURE TO VEHICLE

5.4

OPTION 1: Rivnut Installation

Enlarge the Pilot Holes to 9mm, de-burr the holes using a file or countersink tool and apply Anti-Rust on each hole.

Insert and set each M6 Rivnut (Item 9) using a Rivnut Tool.

5.5

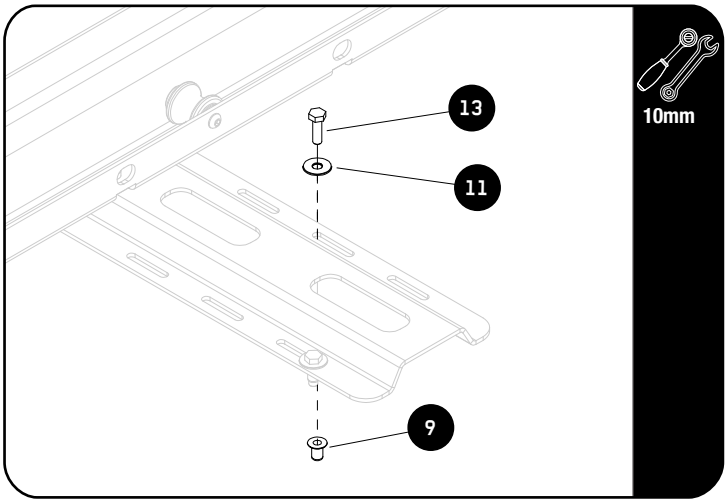

Place the Base Assembly back into the Load Bin, aligning with the Rivnuts.

Secure the Base Assembly using the M6 x 19 x 1 Flat Washers and M6 x 25 Hex Bolts (Items 11 & 13)

Assemble all the fasteners before fully tightening.

<u>Tightening Torque</u>:

M6 : 8-10Nm / 5.9 ft lb - 7.38 ft lb

5.6

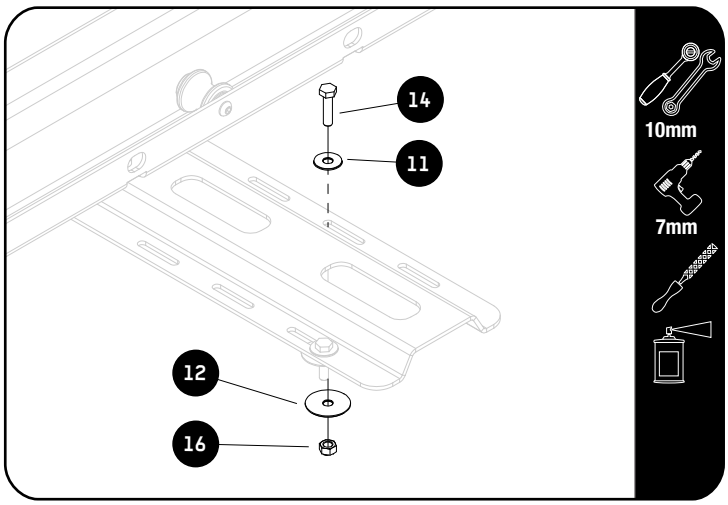

OPTION 2 : Nut & Bolt Installation

Enlarge the Pilot Holes to 7mm, de-burr the holes using a file or countersink tool and apply Anti-Rust on each hole.

Place the Base Assembly back into the Load Bin, aligning with the holes.

Secure the Base Assembly using one M6 x 30 x 1 Flat Washer, one M6 x 19 x 1 Flat Washer, one M6 x 25 Hex Bolt and one M6 Nyloc Nut (Items 12, 11, 14 & 16) per hole.

Assemble all the fasteners before fully tightening.

Note that the fastener order - from the top down - should be Hex Bolt, 19mm Washer, Strut, Load Bin, 30mm Washer, Nyloc Nut.

<u>Tightening Torque</u>:

M6 : 8-10Nm / 5.9 ft lb - 7.38 ft lb

 © 2026 FRONT RUNNER VEHICLE OUTFITTERS

6 FINAL ASSEMBLY

6.1

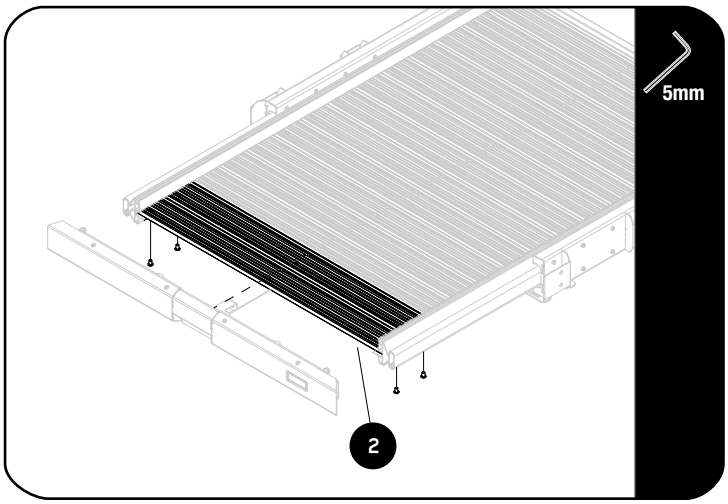

Open the slide beyond the tail gate and stop the slide in a locked position, with the brake pin engaged in a brake slot.

Gently remove the Front Mount Plate, without disconnecting the Cable and move aside.

Slide the remaining two Slats (Item 2) in the correct orientation into the Side Extrusions and secure following Steps 2.1 - 2.3.

<u>Tightening Torque</u>:

M8 : 15-20Nm / 11.06 ft lb - 14.75 ft lb

6.2

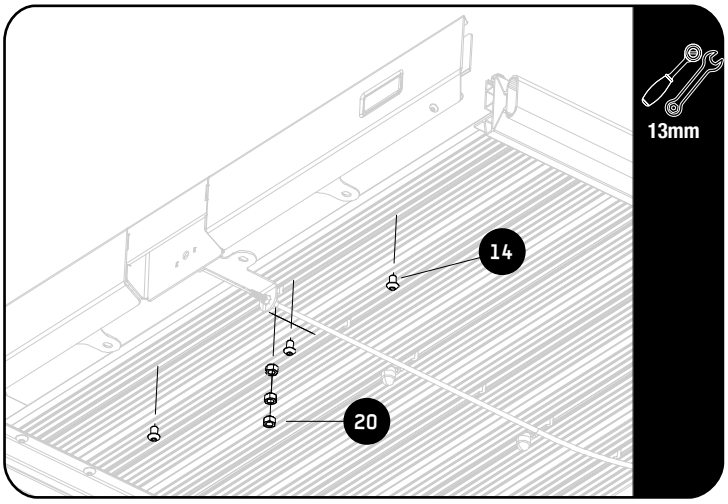

Looking from the rear behind the tailgate, refit the Front Mount Plate in the Side Extrusion (Silver)T-Slots and secure the underside using M8 Nyloc Nuts and M8 x 12 Button Head Bolts (Items 20 & 14).

<u>Tightening Torque</u>:

M8 : 15-20Nm / 11.06 ft lb - 14.75 ft lb

© 2026 FRONT RUNNER VEHICLE OUTFITTERS

7 OPERATION

7.1

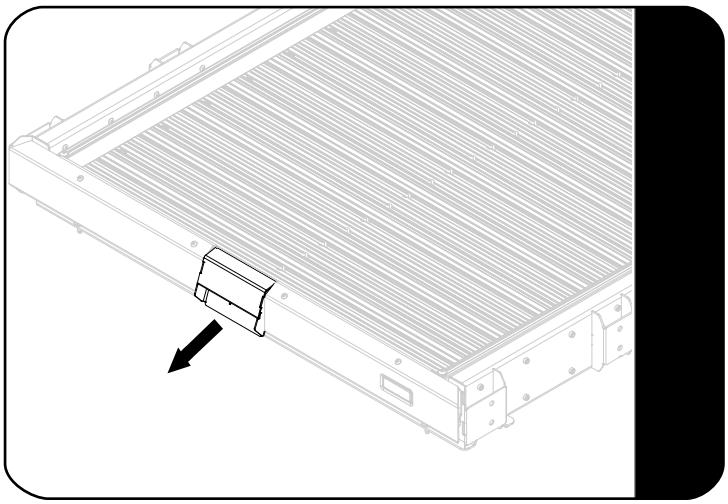

Pull the Handle upwards and towards you and keep it there to release the brake pin on the latch. In a smooth motion pull out the slide.

If released, the brake pin will find the closest brake slot in the Side Wheel assembly and stop the slide from moving any further, as shown in the next step.

7.2

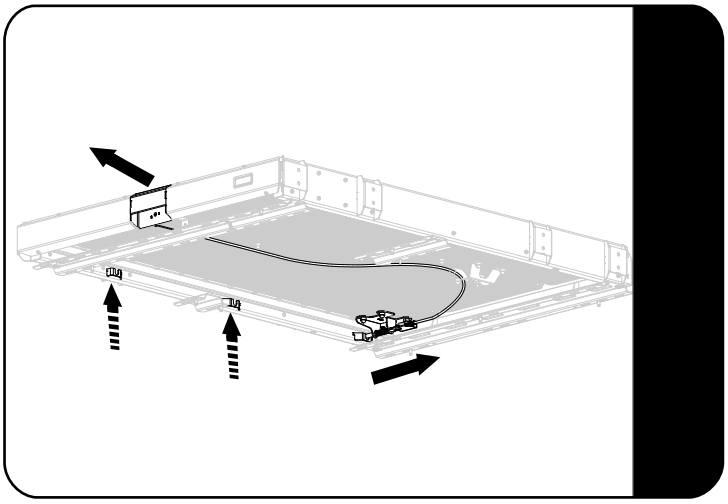

7.3

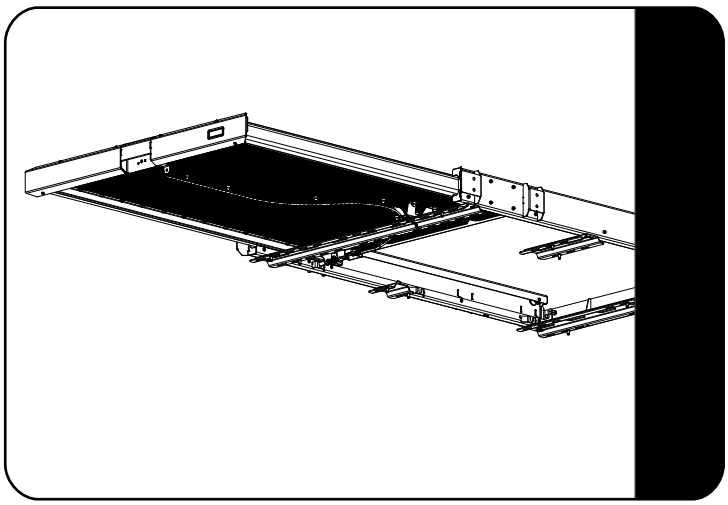

Fully Open position orientated to show the bottom.

© 2026 FRONT RUNNER VEHICLE OUTFITTERS

8 COMPLETION

8.1 Congratulations! You did it. Take a step back and admire your work!

9 TAKE A TRIP

After your first trip, check that all nuts, bolts, screws and fittings are tight. Re-tighten where needed.
You will find a small amount of settling has happend.

Before going on a trip, check if the nuts, bolts, screws or fittings need to be re-torqued.

10 INSTALL OTHER VEHICLE AND RACK ACCESSORIES

Now's the time to visit your favorite Front Runner dealer in person or online.

IMPORTANT! ⚠

FRONT RUNNER RACK KITS OFTEN HAVE A HIGHER LOAD RATING THAN THE VEHICLES THEY ARE MOUNTED TO. PLEASE REFER TO YOUR SPECIFIC VEHICLE MANUFACTURER FOR A RECOMMENDED ROOF RATING. FRONT RUNNER CANNOT BE RESPONSIBLE FOR IMPROPER LOADING BEYOND THE VEHICLE MANUFACTURER'S STATED LOAD CAPACITY.

Be sure to tag us. We love to see our gear in action! #FrontRunnerOutfitters

Share your adventures on:

© 2026 FRONT RUNNER VEHICLE OUTFITTERS

11 CHECKLIST

A (2.3)	Ensure that the Slide measurements are equal, when measured diagonally across the corners.	✓
B (3.3)	Note the position of the Hard Stop Slot in the Front Strut.	✓
C (4.3)	Ensure that the Bottom Frame measurements are equal, when measured diagonally across the corners.	✓
D (4.4)	Open the slide and ensure that the Hard Stop assembly aligns with the Slot in the Front Strut.	✓
E (4.8)	Ensure that the Inner Wire of the cable is sufficiently pre-tensioned and that is is fitted securely with Loctite applied to the Fasteners.	✓

© 2026 FRONT RUNNER VEHICLE OUTFITTERS