FRONT RUNNER
VEHICLE OUTFITTERS

4 CUB BOX DRAWER MEDIUM

ENG

SSAM011

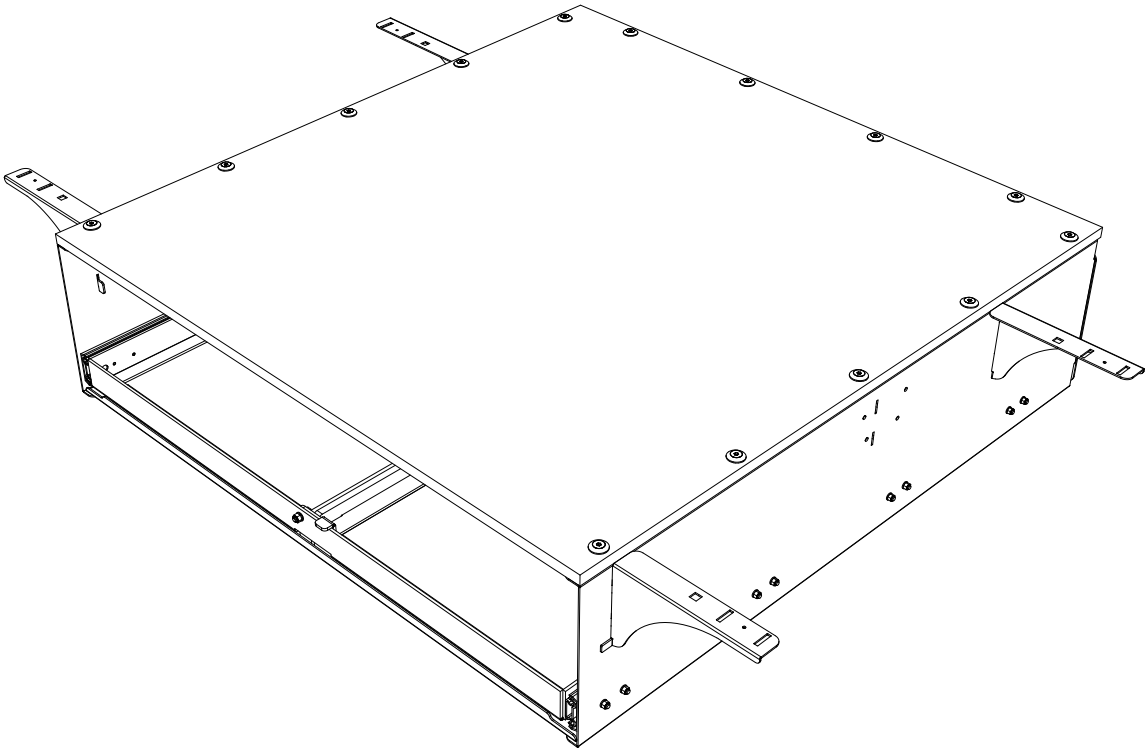

READ ME !

Thank you for purchasing a Front Runner 4 Cub Box Drawer Medium.

Before you start, take a moment to familiarize yourself with the Fitting Instructions and the components received.

Refer to Page 2 for a list of all the components, quantities and tools required.

NOTE: Front Runner will not be responsible for any damage caused by the failure to install the product according to these instructions. Please cal us if you have any questions about the installation of this product.

IMPORTANT WARNING!

FRONT RUNNER CAN NOT RECOMMEND A MAXIMUM LOAD CARRYING CAPACITY. PLEASE REFER TO YOUR VEHICLE MANUFACTURER'S RECOMMENDATIONS. IT IS CRITICAL THAT ALL FRONT RUNNER PRODUCTS BE PROPERLY AND SECURELY ASSEMBLED AND ATTACHED TO YOUR VEHICLE. IMPROPER ATTACHMENT COULD RESULT IN AN AUTOMOBILE ACCIDENT, AND COULD CAUSE SERIOUS BODILY INJURY OR DEATH. YOU ARE RESPONSIBLE FOR ASSEMBLING AND SECURING ALL FRONT RUNNER PRODUCTS TO YOUR VEHICLE. CHECKING THE ATTACHMENTS PRIOR TO USE, AND PERIODICALLY INSPECTING THE PRODUCTS FOR ADJUSTMENT, WEAR AND DAMAGE. THEREFORE YOU MUST READ AND UNDERSTAND ALL OF THE INSTRUCTIONS AND PRECAUTIONS SUPPLIED WITH YOUR FRONT RUNNER PRODUCT PRIOR TO INSTALLATION OR USE. IF YOU DO NOT UNDERSTAND ALL OF THE INSTRUCTIONS AND CAUTIONS, OR IF YOU HAVE NO MECHANICAL EXPERIENCE AND ARE NOT THOROUGHLY FAMILIAR WITH THE INSTALLATION PROCEDURES, YOU SHOULD HAVE THE PRODUCT INSTALLED BY A PROFESSIONAL INSTALLER OR OTHER QUALIFIED PERSONNEL.

© COPYRIGHT 2017 FRONT RUNNER VEHICLE OUTFITTERS

1 GET ORGANIZED

IN THE BOX

1	1 X	4 Cub Box Drawer Medium
2	4 X	M6 x 30 Hex Bolt
3	4 X	M6 Spring Washer
4	4 X	M6 x 19 x 1 Flat Washer
5	8 X	M8 x 19 x 3 Flat Washer
6	4 X	M6 Rivnut
7	4 X	M6 x 25 Counter Sink Screw
8	4 X	M6 Cage Nut
9	4 X	M6 x 30 x 1 Washer
10	4 X	Side Bracket for Drawer System (2LH & 2RH)

SOLD SEPARATELY

11	1 X	SSCA020
12	1 X	SSCA021

TOOLS NEEDED

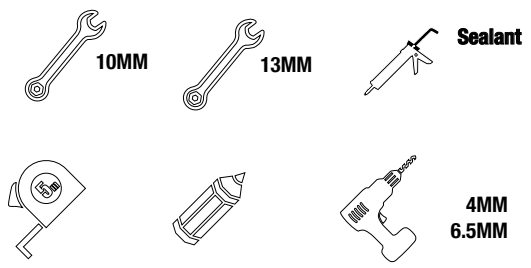

READ ME !

In order for your Drawer to open freely over the vehicles plastic trim you may need a Drawer Mount Kit SSCA020 / SSCA021. (SOLD SEPARATELY)

Refer to these fitting instructions first should you be using a mount kit.

FIGURE 1.1

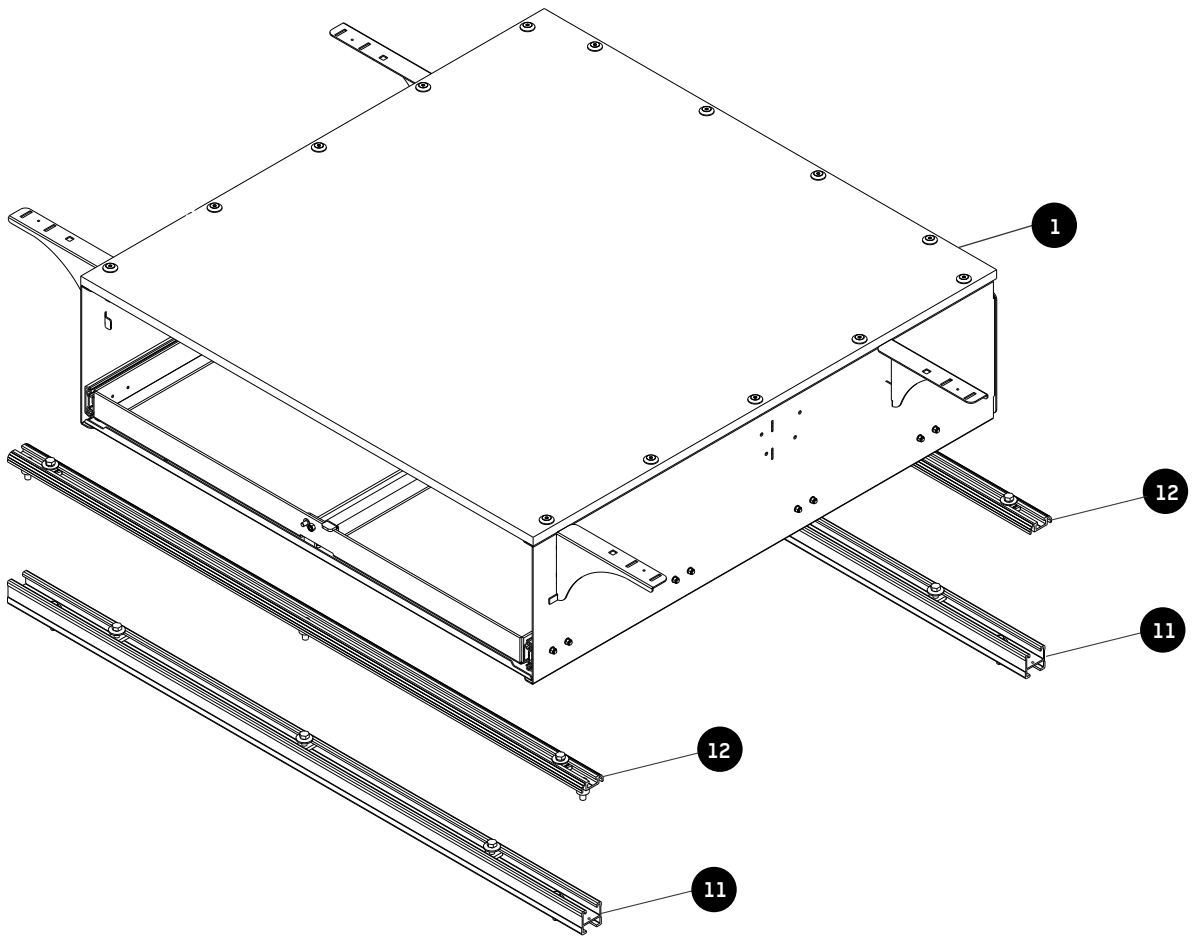

© COPYRIGHT 2017 FRONT RUNNER VEHICLE OUTFITTERS

2 FIT AND SECURE

2.1

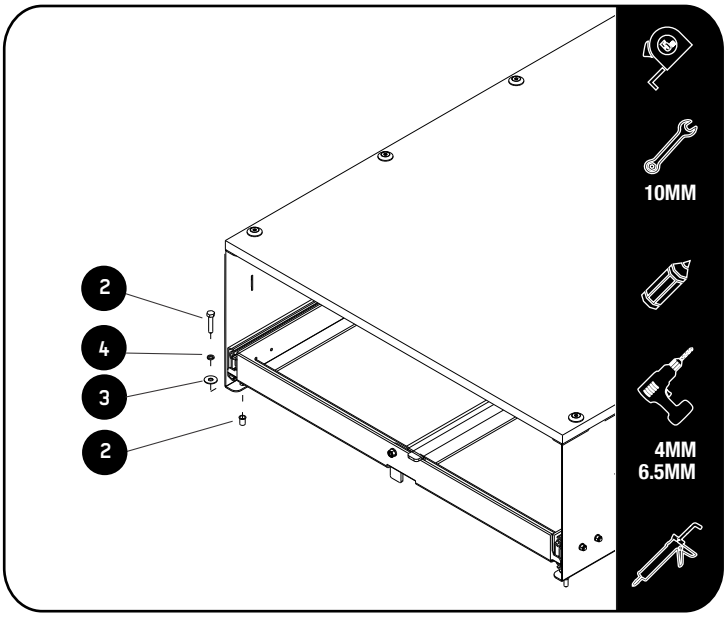

FITMENT WITHOUT MOUNTING KIT

Place the Drawer (Item 1) in the vehicle and position it. Make sure the Drawer opens & closes freely without touching the plastic trim on the trunk floor.

Once the Drawer (Item 1) is in position, mark the four mounting hole positions. Remove the Drawer and check for clearance on all marked holes, above & below the mounting surface. Start with a 4mm drill bit and drill pilot holes. Finally use the 6.5mm drill bit and redrill holes. Use anti-rust on all holes drilled.

Secure the Drawer (Item 1) to the vehicle using M6 x 25 Hex Bolts, M6 x19 x 1SS Flat Washers, M6 Nyloc Nuts & M6 Rivnut (Item 2,3,4 & 6) as shown. Use silicon to create a water proof seal.

2.2

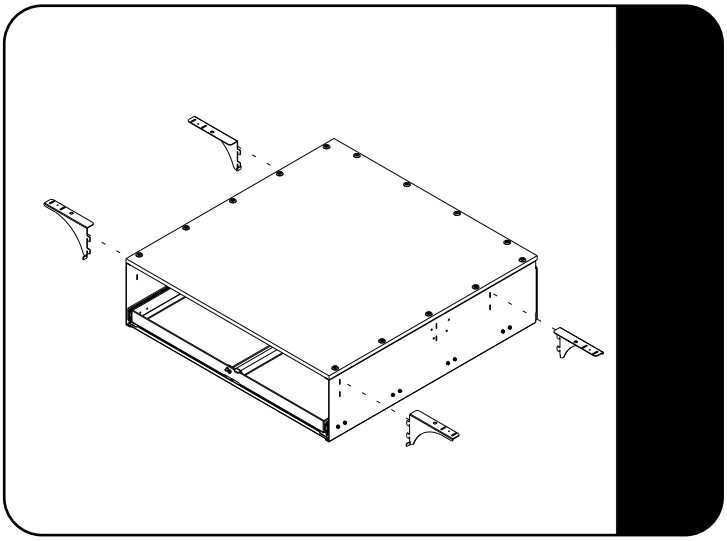

Once the Drawer (Item 1) is secure you can now add the Side Brackets (Item 10) by sloting them into postion as shown.

The Drawer system does not come with a vehicle specific deck completion set or face plates.

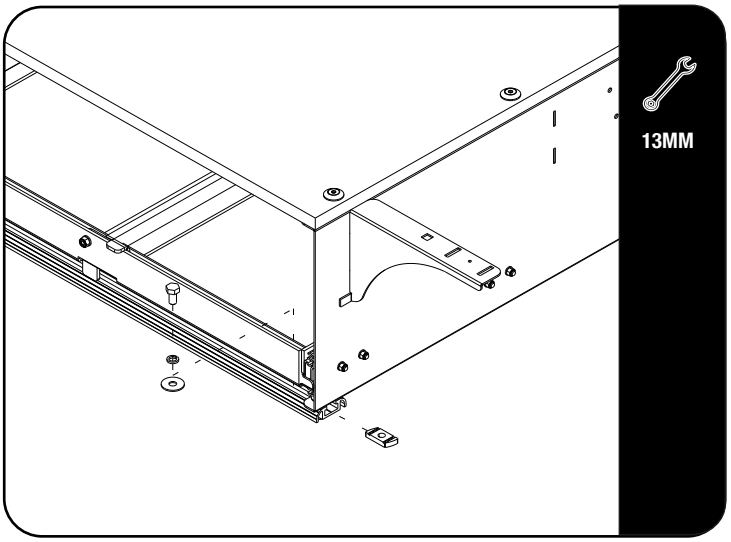

FITMENT USING A MOUNTING KIT

Use the hardware & fitting instructions received with (SSCA020 / SSCA021)

After fitting the mounting kit slide three M8 Channel Nuts into each of the Aluminium Extrusions. Secure using the M8 x 25 Hex Bolts, M8 Spring Washers and M8 x 25 x 2 Flat Washers through the Drawer base frame into the M8 Channel nuts.

© COPYRIGHT 2017 FRONT RUNNER VEHICLE OUTFITTERS

3 COMPLETION

3.1

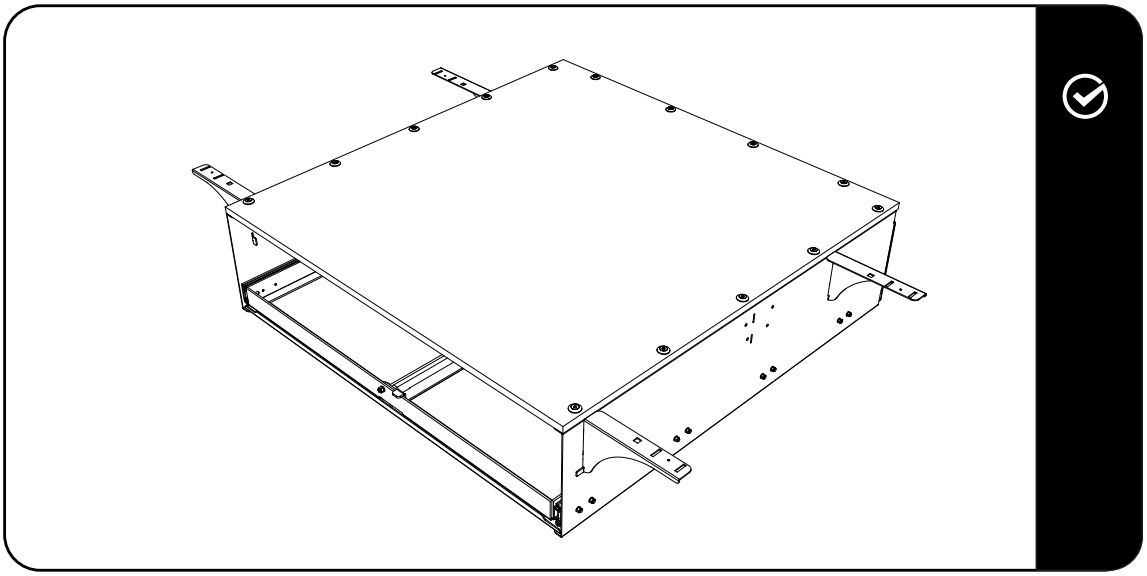

Congratulations. You did it. Take a step back and admire your work!

4 INSTALL OTHER VEHICLE AND RACK ACCESSORIES

Now's the time to visit your favorite Front Runner Dealer in person or Online.

Be sure to tag us. We love to see our gear in action! #FrontRunnerOutfitters #BornToRoam

Share your adventures on:

© COPYRIGHT 2017 FRONT RUNNER VEHICLE OUTFITTERS