FRONT RUNNER
VEHICLE OUTFITTERS

SUMP AND BELLY GUARD

TOYOTA HILUX/FORTUNER (2016 - CURRENT)

ENG

SGTH003

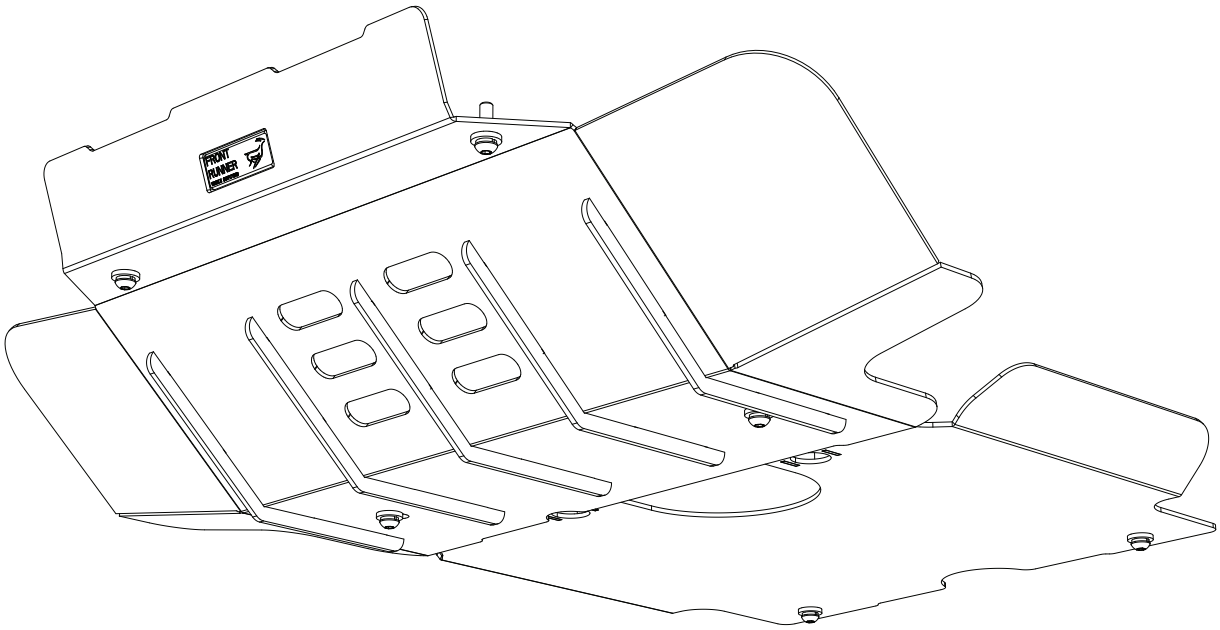

READ ME !

Thank you for purchasing a Front Runner Sump And Belly Guard.

Before you start, take a moment to familiarize yourself with this Fitting Instruction and the components received.

Refer to Page 2 for a list of all the components, quantities and tools required.

IMPORTANT WARNING!

FRONT RUNNER CAN NOT RECOMMEND A MAXIMUM LOAD CARRYING CAPACITY. PLEASE REFER TO YOUR VEHICLE MANUFACTURER'S RECOMMENDATIONS. IT IS CRITICAL THAT ALL FRONT RUNNER PRODUCTS BE PROPERLY AND SECURELY ASSEMBLED AND ATTACHED TO YOUR VEHICLE. IMPROPER ATTACHMENT COULD RESULT IN AN AUTOMOBILE ACCIDENT, AND COULD CAUSE SERIOUS BODILY INJURY OR DEATH. YOU ARE RESPONSIBLE FOR ASSEMBLING AND SECURING ALL FRONT RUNNER PRODUCTS TO YOUR VEHICLE. CHECKING THE ATTACHMENTS PRIOR TO USE, AND PERIODICALLY INSPECTING THE PRODUCTS FOR ADJUSTMENT, WEAR AND DAMAGE. THEREFORE YOU MUST READ AND UNDERSTAND ALL OF THE INSTRUCTIONS AND PRECAUTIONS SUPPLIED WITH YOUR FRONT RUNNER PRODUCT PRIOR TO INSTALLATION OR USE. IF YOU DO NOT UNDERSTAND ALL OF THE INSTRUCTIONS AND CAUTIONS, OR IF YOU HAVE NO MECHANICAL EXPERIENCE AND ARE NOT THOROUGHLY FAMILIAR WITH THE INSTALLATION PROCEDURES, YOU SHOULD HAVE THE PRODUCT INSTALLED BY A PROFESSIONAL INSTALLER OR OTHER QUALIFIED PERSONNEL.

© COPYRIGHT 2016 FRONT RUNNER VEHICLE OUTFITTERS

1 GET ORGANIZED

IN THE BOX

1	1 X	Sump Guard
2	1 X	Belly Guard
3	2 X	Spacer 19x12x20
4	8 X	Flat Washer M8x19x3
5	8 X	Spring Washer M8
6	4 X	Button Head M8x25
7	2 X	Button Head M8x45
8	2 X	Hex Bolt M8x25

TOOLS NEEDED

12MM
13MM

5MM

FIGURE 1.1

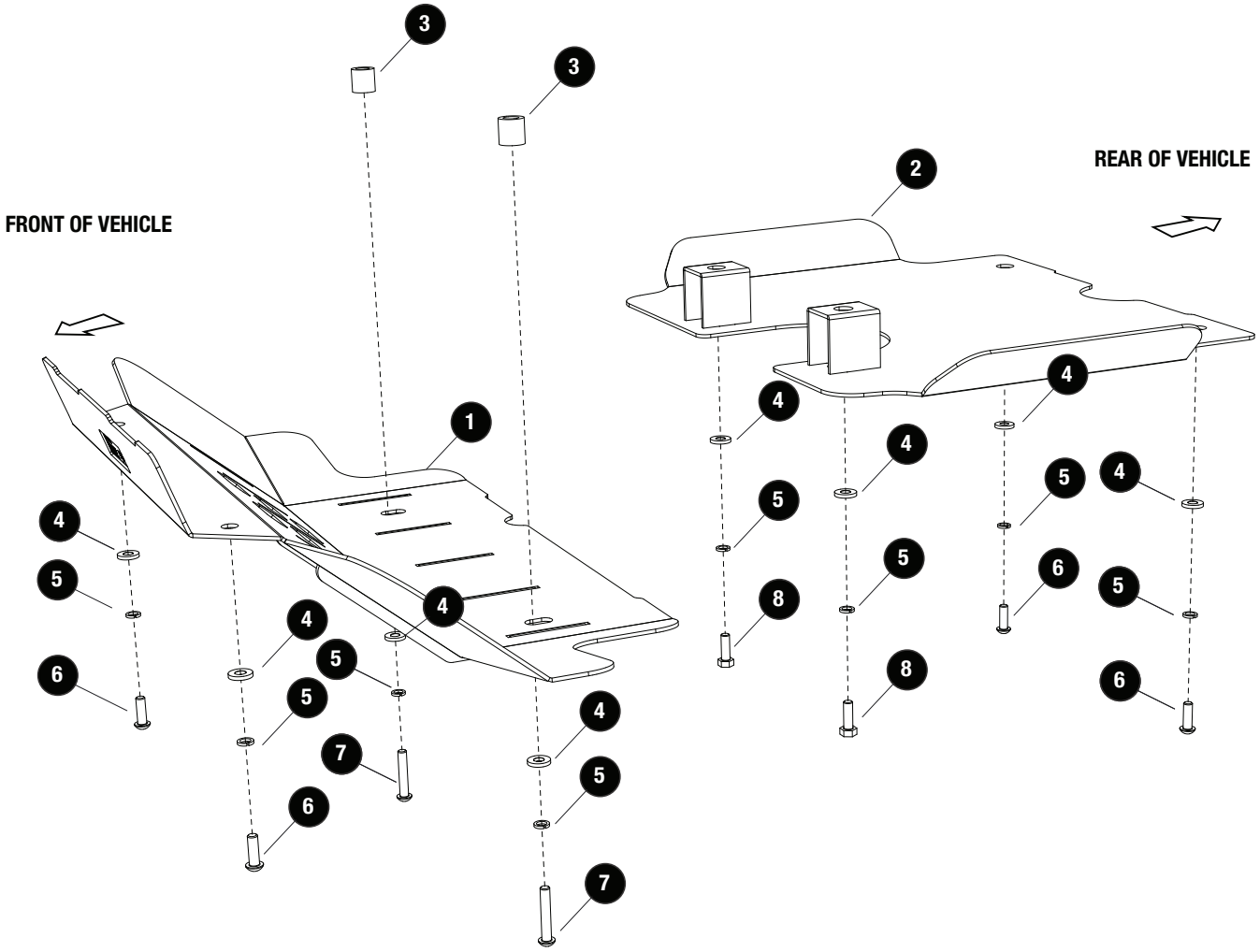

© COPYRIGHT 2016 FRONT RUNNER VEHICLE OUTFITTERS

2 FIT AND SECURE

2.1

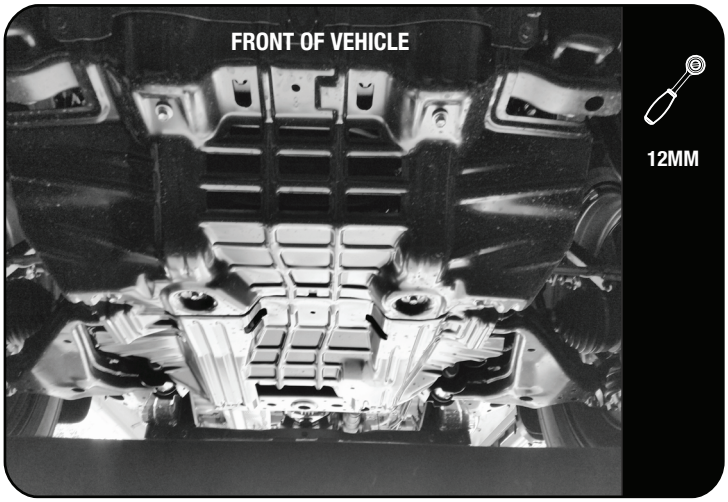

Remove factory fitted sump and gearbox guard.

2.2

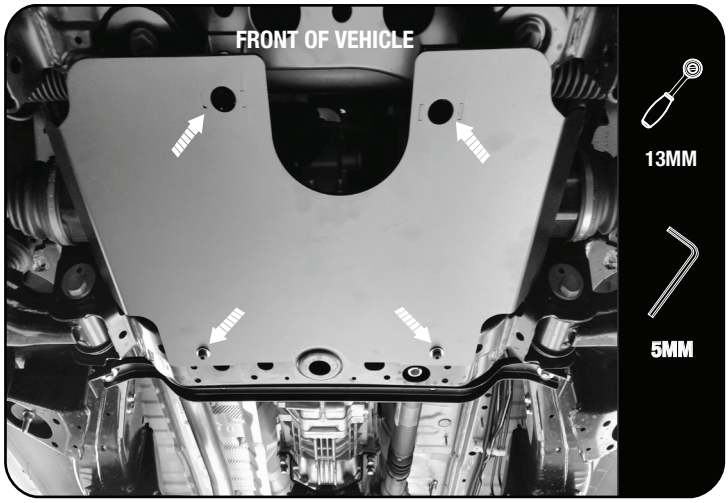

Fit and secure the gearbox guard with supplied fasteners to the existing holes in the chassis.
See diagram 1.1

Tightening Torque 40Nm

2.3

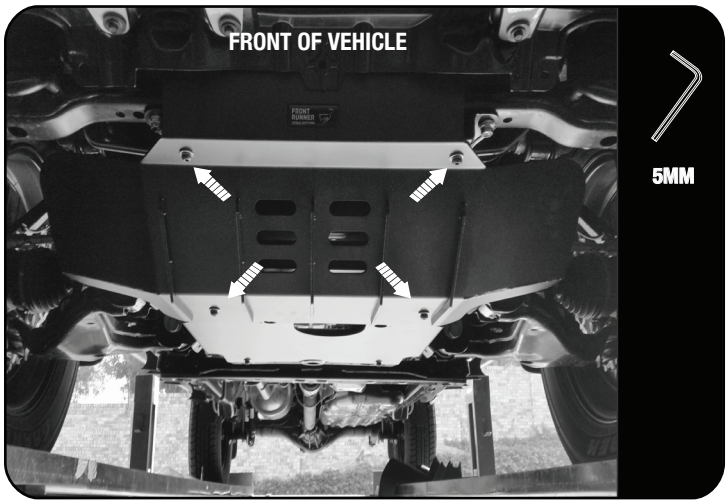

Fit and secure the sump guard with fasteners supplied to the existing holes in the chassis.
See diagram 1.1

Tightening Torque 40Nm

© COPYRIGHT 2016 FRONT RUNNER VEHICLE OUTFITTERS

3 COMPLETION

3.1

Congratulations. You did it. Take a step back and admire your work!

4 Front Runner will not be responsible for any damage caused by the failure to install the product according to these instructions. Please call us if you have any questions about the installation of this product.

5 INSTALL OTHER VEHICLE AND RACK ACCESSORIES

Now's the time to visit your favorite Front Runner Dealer in person or Online.

Be sure to tag us. We love to see our gear in action! #FrontRunnerOutfitters #BornToRoam

Share your adventures on:

© COPYRIGHT 2016 FRONT RUNNER VEHICLE OUTFITTERS