FRONT RUNNER

FORD RANGER 2020 LOCKABLE UNDER SEAT STORAGE COMPARTMENT

ENG

SAFE011

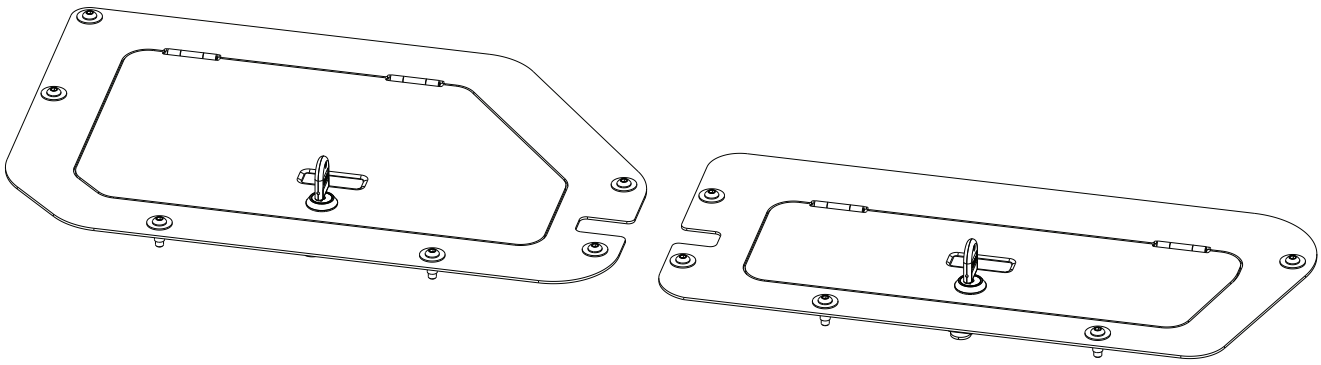

READ ME !

Thank you for purchasing a Front Runner Ford Ranger 2020 Lockable Under Seat Storage Compartment.

Before you start, take a moment to familiarize yourself with the Fitting Instructions and the components received.

Refer to Page 2 for a list of all the components, quantities and tools required.

IMPORTANT WARNING!

IT IS CRITICAL THAT ALL FRONT RUNNER PRODUCTS BE PROPERLY AND SECURELY ASSEMBLED AND ATTACHED TO YOUR VEHICLE. IMPROPER ATTACHMENT COULD RESULT IN AN AUTOMOBILE ACCIDENT, AND COULD CAUSE SERIOUS BODILY INJURY OR DEATH. YOU ARE RESPONSIBLE FOR ASSEMBLING AND SECURING ALL FRONT RUNNER PRODUCTS TO YOUR VEHICLE, CHECKING THE ATTACHMENTS PRIOR TO USE, AND PERIODICALLY INSPECTING THE PRODUCTS FOR ADJUSTMENT, WEAR AND DAMAGE. THEREFORE, YOU MUST READ AND UNDERSTAND ALL OF THE INSTRUCTIONS AND PRECAUTIONS SUPPLIED WITH YOUR FRONT RUNNER PRODUCT PRIOR TO INSTALLATION OR USE. IF YOU DO NOT UNDERSTAND ALL OF THE INSTRUCTIONS AND CAUTIONS, OR IF YOU HAVE NO MECHANICAL EXPERIENCE AND ARE NOT THOROUGHLY FAMILIAR WITH THE INSTALLATION PROCEDURES, YOU SHOULD HAVE THE PRODUCT INSTALLED BY A PROFESSIONAL INSTALLER OR OTHER QUALIFIED PERSONNEL.

NOTE: Front Runner will not be responsible for any damage caused by the failure to install the product according to these instructions.

Please call us if you have any questions about the installation of this product.

 © 2021 FRONT RUNNER VEHICLE OUTFITTERS

1 GET ORGANIZED

IN THE BOX		
1	1 X	RH Safe
2	1 X	LH Safe
3	11 X	M6 x 20 Button Head Screw
4	11 X	Large M6 Flat washer
5	11 X	M6 Rivnut

TOOLS NEEDED

FIGURE 1.1

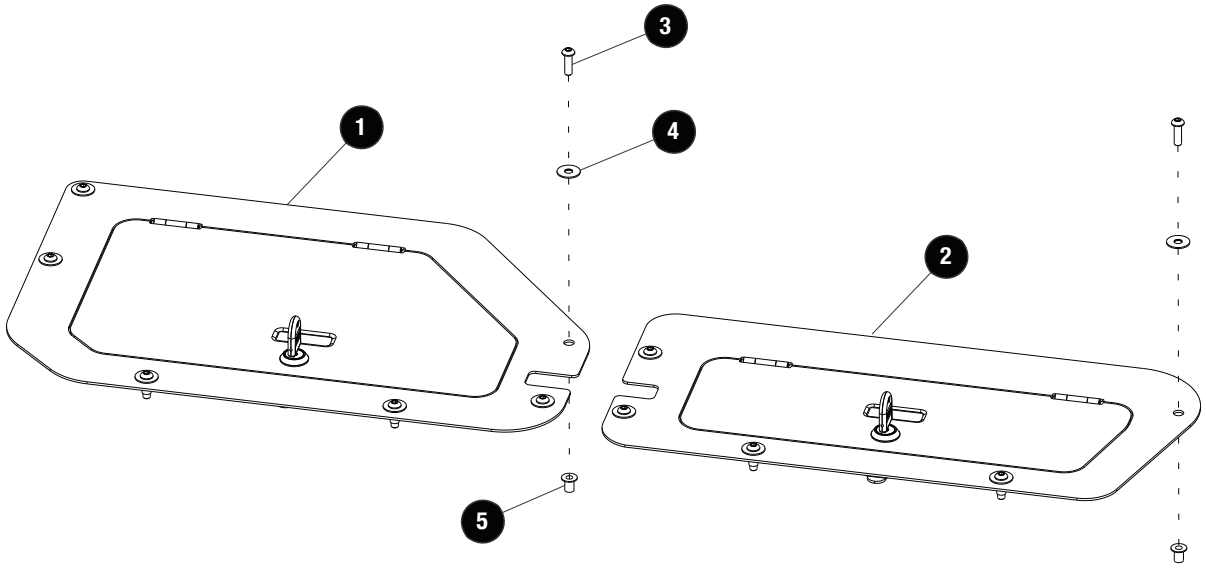

 © 2021 FRONT RUNNER VEHICLE OUTFITTERS

2 FIT AND SECURE

2.1

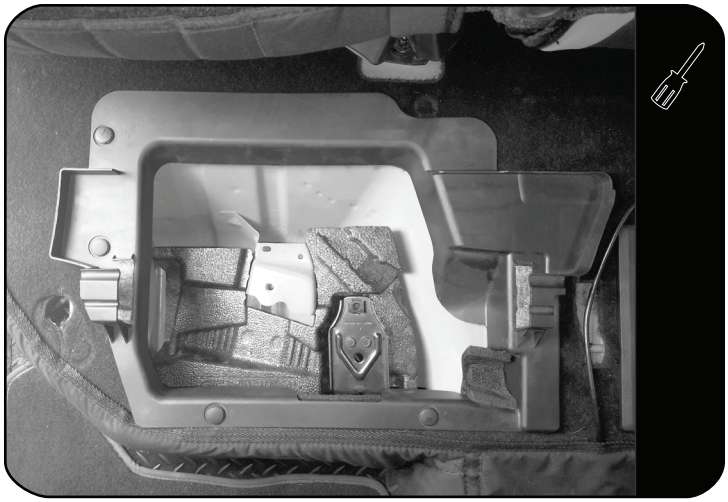

Lift the rear seat exposing the storage compartments.

Remove the jack and accessories from the RH storage compartment.

Remove the four plastic rivets from the compartment cover.

Unclip and remove the cover.

Remove the jack and accessory foam if required.

2.2

Remove the three plastic rivets from the LH compartment tray.

Unclip and remove the tray.

Open the holes on the left and right compartments using a 9.5mm drill bit. Insert and crimp the M6 Rivnuts (Item 5) using a Rivnut Tool.

Take care when drilling as not to damage any vehicle components directly under the storage compartments.

M6 & M8 Rivnuts can be installed using a Front Runner Rivnut Tool M6/M8 - VACC016 (sold seperately)

2.3

Secure the RH Safe (Item 1) over the RH compartment using six M6 x 20 Button Head Screws and six M6 Large Washers (Items 3 & 4).

© 2021 FRONT RUNNER VEHICLE OUTFITTERS

2 FIT AND SECURE

2.4

Secure the LH Safe (Item 2) over the LH compartment using five M6 x 20 Button Head Screws and five M6 Large Washers (Items 3 & 4).

3 FINISH

Congratulations! You did it. Take a step back and admire your work!

4 INSTALL OTHER VEHICLE AND RACK ACCESSORIES

Now's the time to visit your favorite Front Runner Dealer in person or online.

Be sure to tag us. We love to see our gear in action! #FrontRunnerOutfitters #BornToRoam

Share your adventures on:

© 2021 FRONT RUNNER VEHICLE OUTFITTERS