FRONT RUNNER

PELICAN CASE BRACKET MEDIUM

ENG

RRAC951

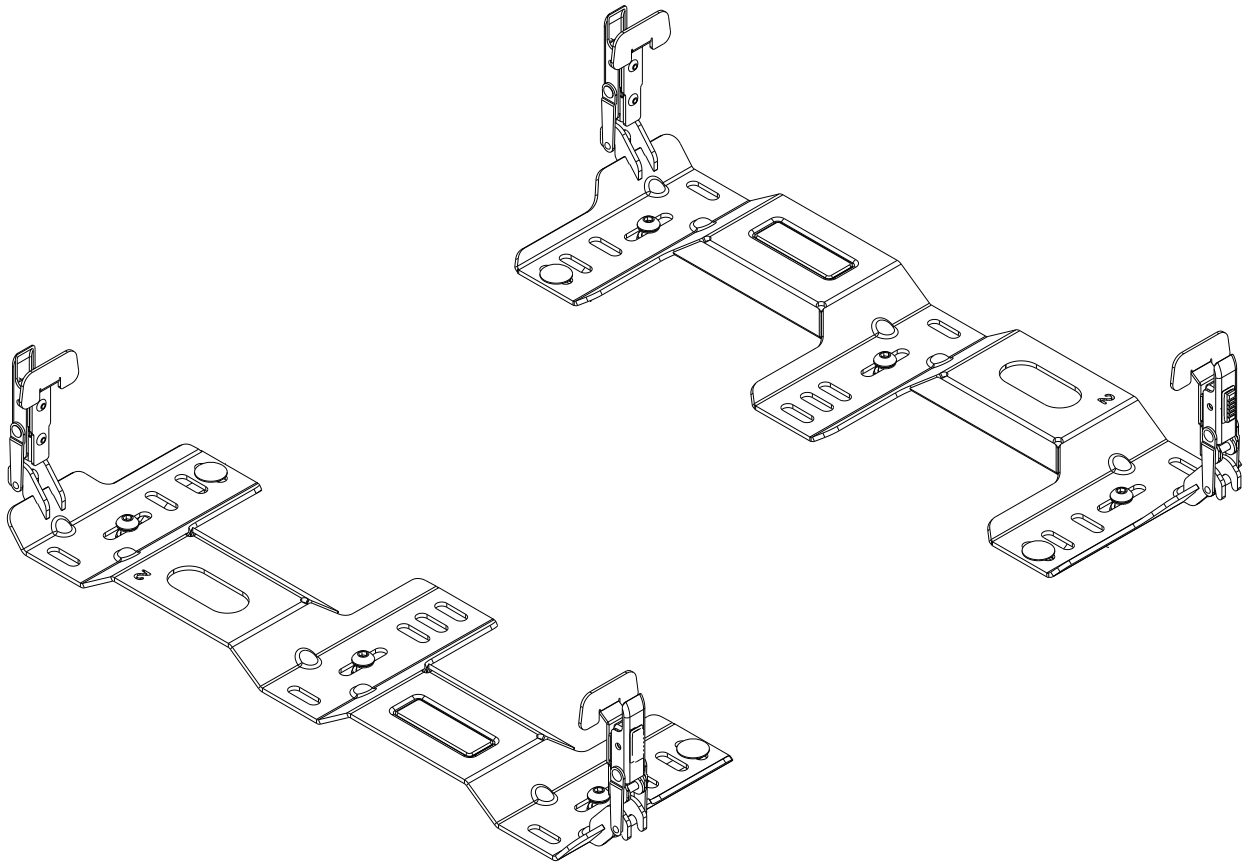

READ ME !

Thank you for purchasing a Front Runner Pelican Case Bracket.

Before you start, take a moment to familiarize yourself with the Fitting Instructions and the components received.

Refer to Page 2 for a list of all the components, quantities and tools required.

IMPORTANT WARNING!

IT IS CRITICAL THAT ALL FRONT RUNNER PRODUCTS BE PROPERLY AND SECURELY ASSEMBLED AND ATTACHED TO YOUR VEHICLE. IMPROPER ATTACHMENT COULD RESULT IN AN AUTOMOBILE ACCIDENT, AND COULD CAUSE SERIOUS BODILY INJURY OR DEATH. YOU ARE RESPONSIBLE FOR ASSEMBLING AND SECURING ALL FRONT RUNNER PRODUCTS TO YOUR VEHICLE, CHECKING THE ATTACHMENTS PRIOR TO USE, AND PERIODICALLY INSPECTING THE PRODUCTS FOR ADJUSTMENT, WEAR AND DAMAGE. THEREFORE, YOU MUST READ AND UNDERSTAND ALL OF THE INSTRUCTIONS AND PRECAUTIONS SUPPLIED WITH YOUR FRONT RUNNER PRODUCT PRIOR TO INSTALLATION OR USE. IF YOU DO NOT UNDERSTAND ALL OF THE INSTRUCTIONS AND CAUTIONS, OR IF YOU HAVE NO MECHANICAL EXPERIENCE AND ARE NOT THOROUGHLY FAMILIAR WITH THE INSTALLATION PROCEDURES, YOU SHOULD HAVE THE PRODUCT INSTALLED BY A PROFESSIONAL INSTALLER OR OTHER QUALIFIED PERSONNEL.

NOTE: Front Runner will not be responsible for any damage caused by the failure to install the product according to these instructions.

Please call us if you have any questions about the installation of this product.

 © 2020 FRONT RUNNER VEHICLE OUTFITTERS

1 GET ORGANIZED

IN THE BOX

1	2 X	Base Plate
2	4 X	Latch
3	6 X	M8 Thin Nut
4	6 X	M8 Schnorr Washer
5	6 X	M8 x 12 Button Head Bolt

TOOLS NEEDED

FIGURE 1.1

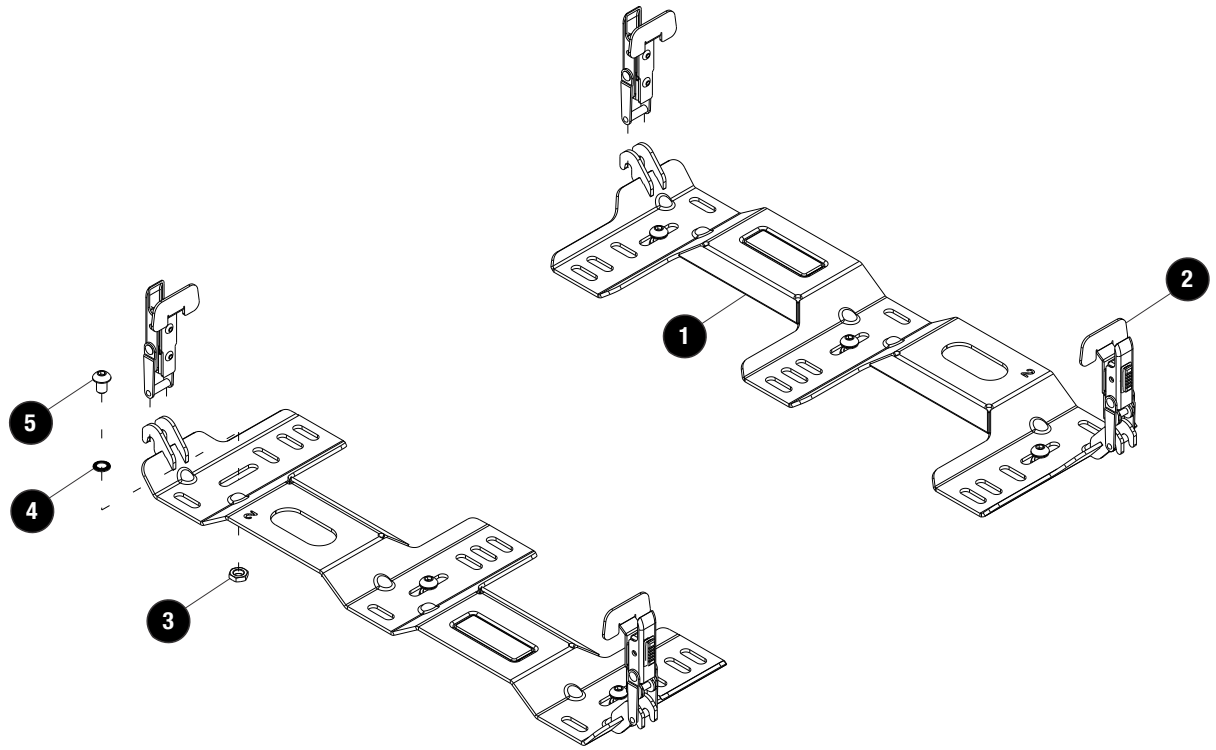

 © 2020 FRONT RUNNER VEHICLE OUTFITTERS

2 FIT AND SECURE

2.1

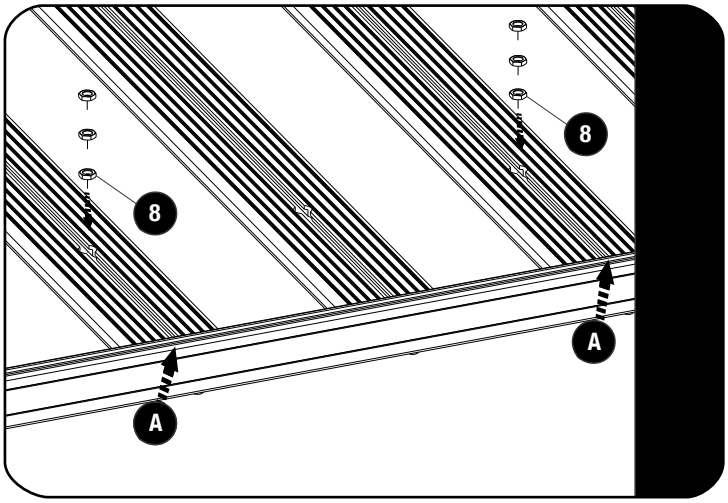

FITMENT TO FRONT RUNNER RACK

Determine where on the rack you want to fit your Pelican Case.

Slide six M8 Thin Nuts (Item 8) into the selected machined slots as shown.

A **Slat spacing to fit your Pelican Medium Roof Case.**

NOTE: The Case can be mounted from left to right or front to back.

2.2

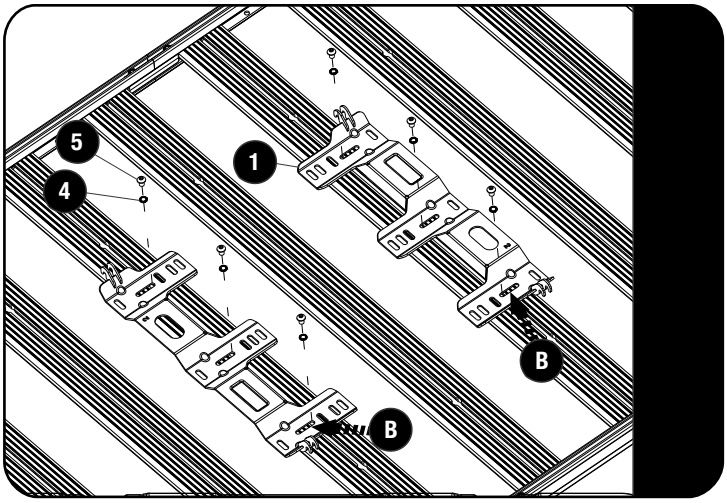

Loosely fit the Base Plates (Item 1) to the rack using M8 x 12 Button Head Bolts, M8 Schnorr Washers (Items 4 & 5) and the M8 Thin Nuts inserted in 2.1.

B **Slots to use to fit your Pelican Medium Roof Case.**

2.3

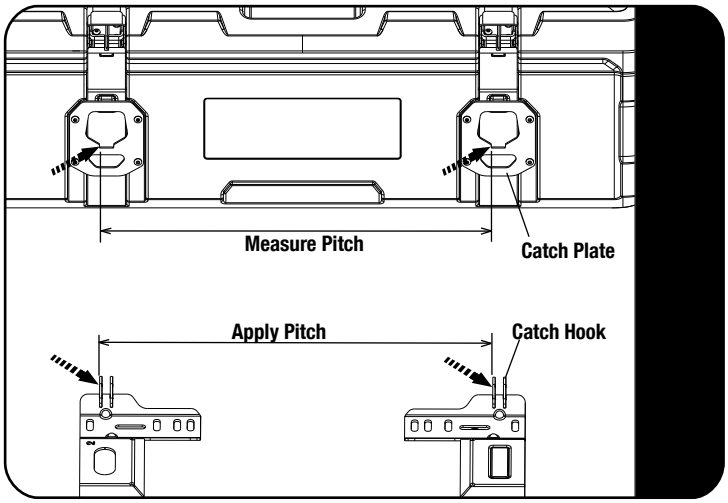

Measure the pitch on the Pelican Case Catch Plates as shown.

Apply the measured pitch to the Base Plate Catch Hooks on the two Base Plates as shown. Adjust the Base Plates if necessary.

Fully tighten after both the Base Plates are aligned with the Catch Plates on the case.

Mount your Pelican Case on the Base Plates.

© 2020 FRONT RUNNER VEHICLE OUTFITTERS

2 FIT AND SECURE

2.4

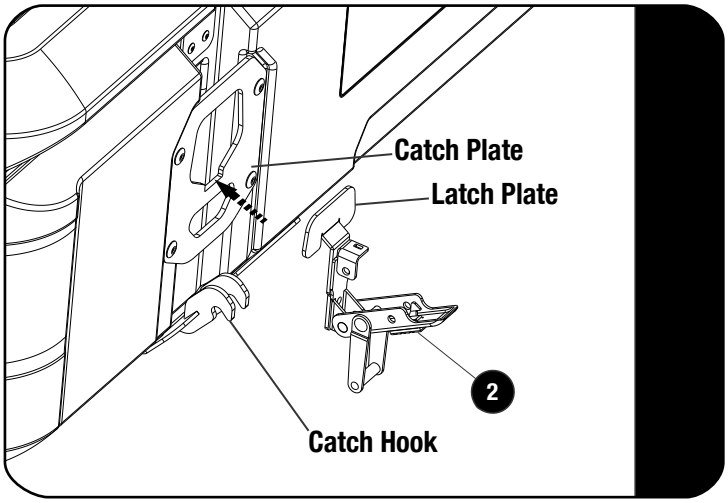

Before attaching the Case to a roof rack, inspect the Latch Plates for damage or insecure fit.

IF THE LATCH PLATES ARE LOOSE OR ANY OF THE RIVETS ARE MISSING. DO NOT USE THE PLATES TO SECURE THE CASE TO THE RACK.

Open the Latch (Item 2) and insert the Latch into the Catch Plate as shown in 2.5.

2.5

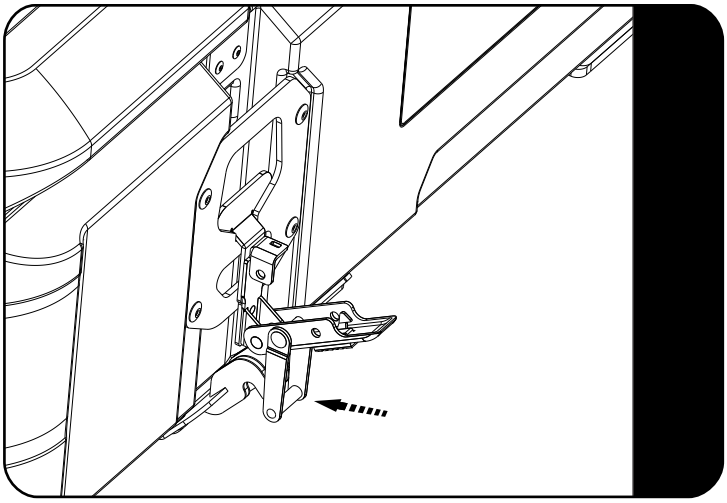

Place the Latch Loop over the Catch Hook on the Base Plate.

2.6

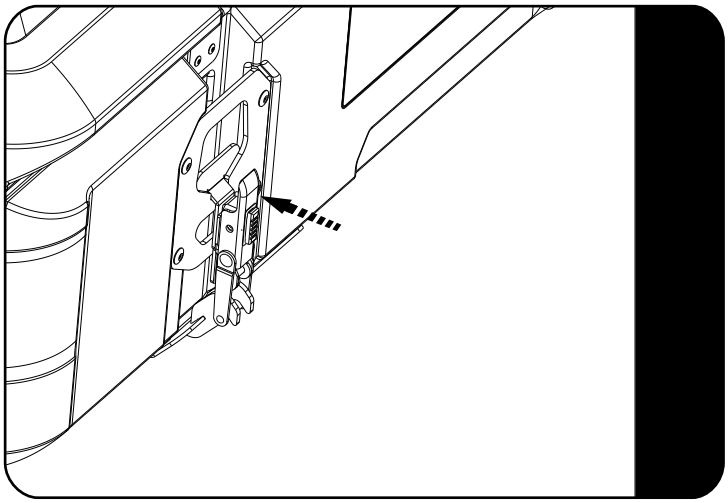

Close the Latch to secure the Pelican Case onto the rack.

Do this with all four Latches.

Latches can be locked using a Front Runner Cable Lock RRAC134 (sold separately) or similar lock.

© 2020 FRONT RUNNER VEHICLE OUTFITTERS

3 IMPORTANT

WEIGHT LIMIT
Always distribute heavy loads as evenly as possible and secure the load appropriately. To avoid damage to the roof rack and vehicle, do not exceed the maximum roof rack load capacity specified by the manufacturer. Refer to Owner's Manual.

COMPLIANCE WITH LAWS
It is your responsibility to comply with state and local laws governing roof racks, loading the roof of your vehicle, the projection of items beyond the frame of the vehicle and road accessibility. The Pelican Cargo Case will increase the height of your vehicle so be aware that clearance requirements for bridges, overpasses, parking garages and more will be impacted.

3 IMPORTANT

MOUNTING KIT CARE
Periodically check the mounting hardware to ensure that there are no loose parts. After exposure to salty coastal climates, or snowy regions, rinse off the mounts with water to remove salt deposits. To help prevent corrosion, apply a silicone based oil or spray to nuts and bolts to help prevent corrosion.

4 FINISH

Congratulations! You did it. Take a step back and admire your work!

5 INSTALL OTHER VEHICLE AND RACK ACCESSORIES

Now's the time to visit your favorite Front Runner Dealer in person or online.

Be sure to tag us. We love to see our gear in action! #FrontRunnerOutfitters #BornToRoam

Share your adventures on:

© 2020 FRONT RUNNER VEHICLE OUTFITTERS