START HERE!

READ ME FIRST

Don't be a hero and muscle through this installation without reading these fitting instructions first! Improper installation of this gear may void certain aspects of your warranty.

Before you begin, take a moment and open all your Front Runner rack kit boxes and gather the assembly instructions for the various components.

A complete kit will contain:

1. A Front Runner Mounting System specific to your vehicle
2. A Front Runner Rack Tray or Load Bar Slats

This document will guide you through the assembly of the mounting system and assist you in fitting the roof rack tray or load bars to your specific vehicle.

Please refer to the next page for a list of all the components, quantities and tools required.

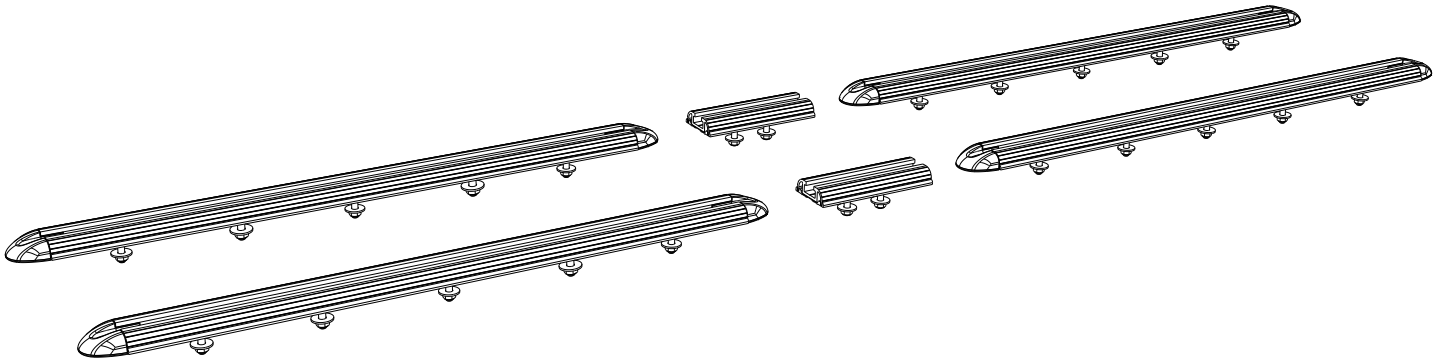

IMPORTANT WARNING! ⚠

IT IS CRITICAL THAT ALL FRONT RUNNER PRODUCTS BE PROPERLY AND SECURELY ASSEMBLED AND ATTACHED TO YOUR VEHICLE. IMPROPER ATTACHMENT COULD RESULT IN AN AUTOMOBILE ACCIDENT, AND COULD CAUSE SERIOUS BODILY INJURY OR DEATH. YOU ARE RESPONSIBLE FOR ASSEMBLING AND SECURING ALL FRONT RUNNER PRODUCTS TO YOUR VEHICLE, CHECKING THE ATTACHMENTS PRIOR TO USE, AND PERIODICALLY INSPECTING THE PRODUCTS FOR ADJUSTMENT, WEAR AND DAMAGE. THEREFORE, YOU MUST READ AND UNDERSTAND ALL OF THE INSTRUCTIONS AND PRECAUTIONS SUPPLIED WITH YOUR FRONT RUNNER PRODUCT PRIOR TO INSTALLATION OR USE. IF YOU DO NOT UNDERSTAND ALL OF THE INSTRUCTIONS AND CAUTIONS, OR IF YOU HAVE NO MECHANICAL EXPERIENCE AND ARE NOT THOROUGHLY FAMILIAR WITH THE INSTALLATION PROCEDURES, YOU SHOULD HAVE THE PRODUCT INSTALLED BY A PROFESSIONAL INSTALLER OR OTHER QUALIFIED PERSONNEL.

NOTE: Front Runner will not be responsible for any damage caused by the failure to install the product according to these instructions.

Please call us if you have any questions about the installation of this product.

 © 2021 FRONT RUNNER VEHICLE OUTFITTERS

1 GET ORGANIZED

IN THE BOX		
1	4 X	Track - 600mm Long
2	2 X	Track - 130mm Long
3	1 X	Track Rubber - 3000mm Long
4	8 X	Track End Cap
5	8 X	M3 x 6 Self Trapping Screw
6	25 X	M6 x 30 Button Head Bolt
7	24 X	M6 x 19 x 1 SS Flat Washer
8	24 X	M6 Nyloc Nut
9	6 X	M6 Jack Nut
10	1 X	Installer Wrench

TOOLS NEEDED

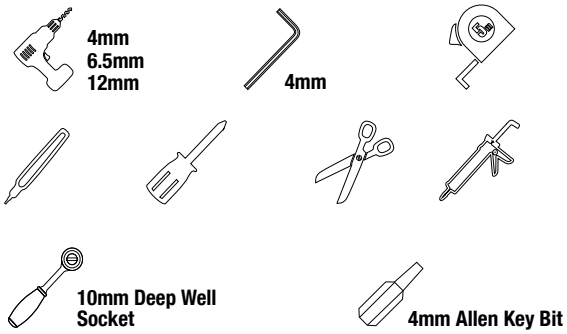

FIGURE 1.1

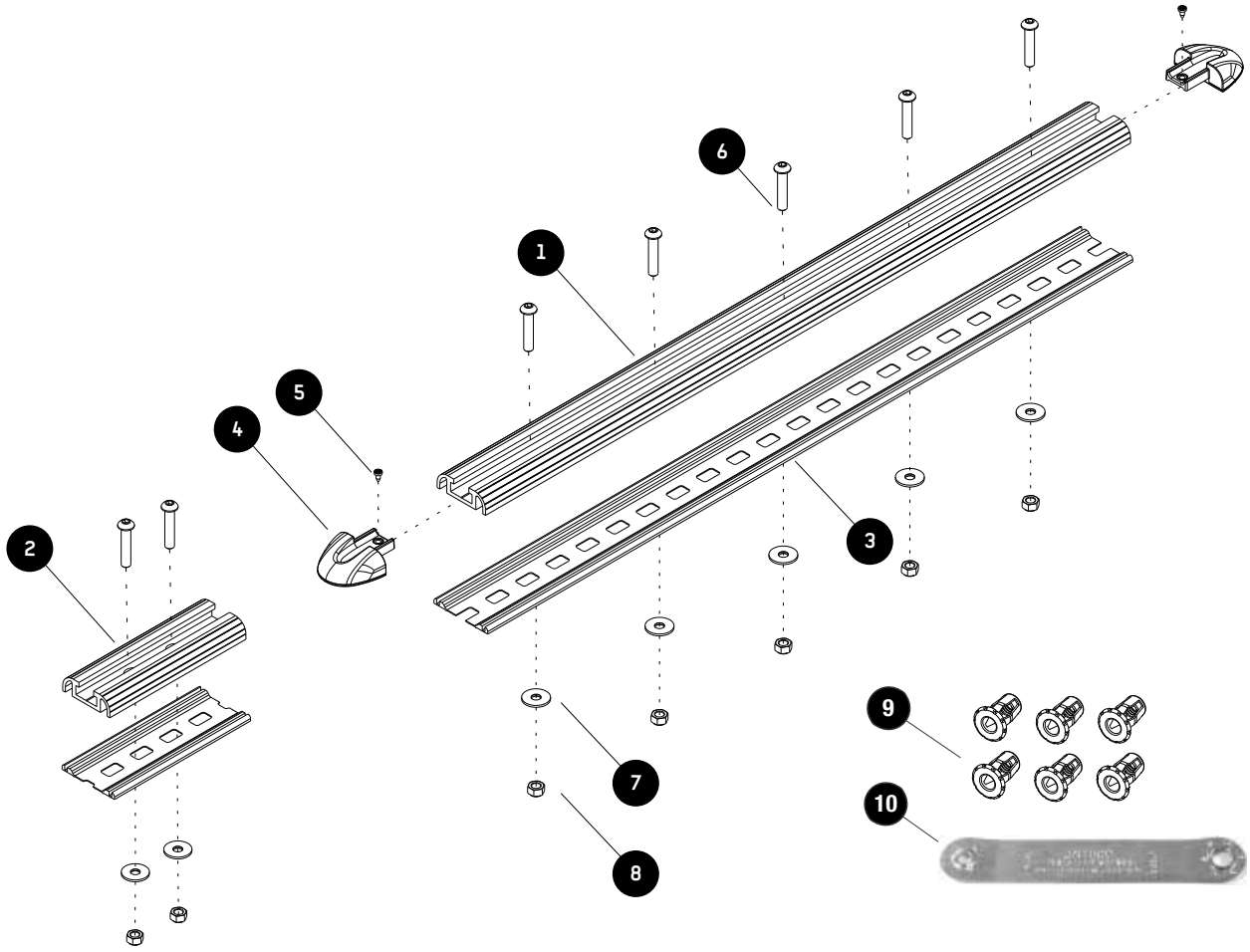

 © 2021 FRONT RUNNER VEHICLE OUTFITTERS

1 GET ORGANIZED

IN THE BOX

1	8 X	M8 x 20 T-Bolt
2	4 X	Cover Plate
3	4 X	Leg Base
4	8 X	M8 x 30 Button Head
5	8 X	M8 x 19 x 2SS Flat Washer
6	8 X	M8 Nut Cap
7	8 X	M8 Nyloc Nut
8	4 X	Leg
9	8 X	M8 x 25 Hex Bolt
10	2 X	Slat - 1475mm Long
11	4 X	Slat End Cap

TOOLS NEEDED

FIGURE 1.2

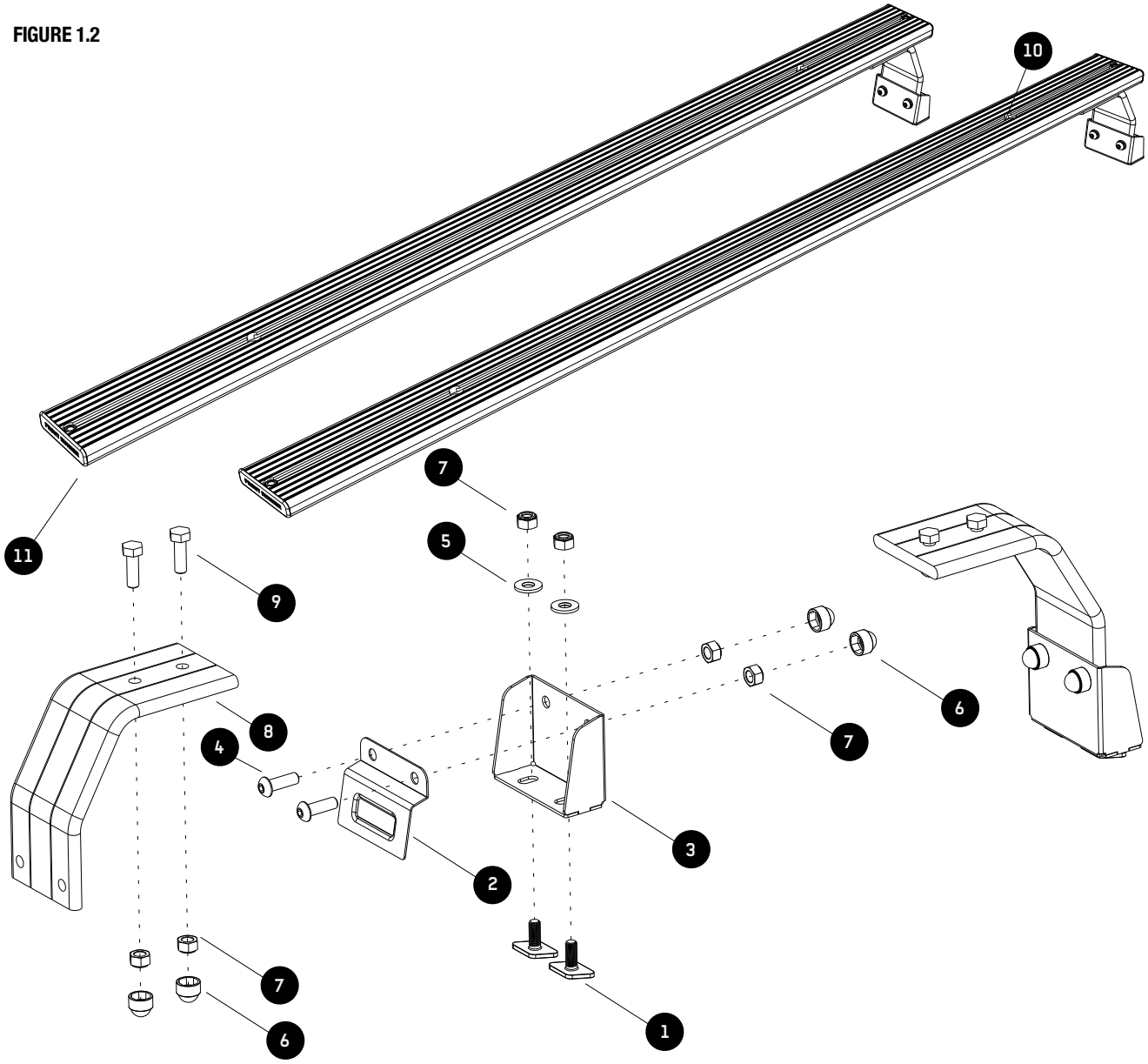

 © 2021 FRONT RUNNER VEHICLE OUTFITTERS

2 FIT AND SECURE TRACKS

2.1

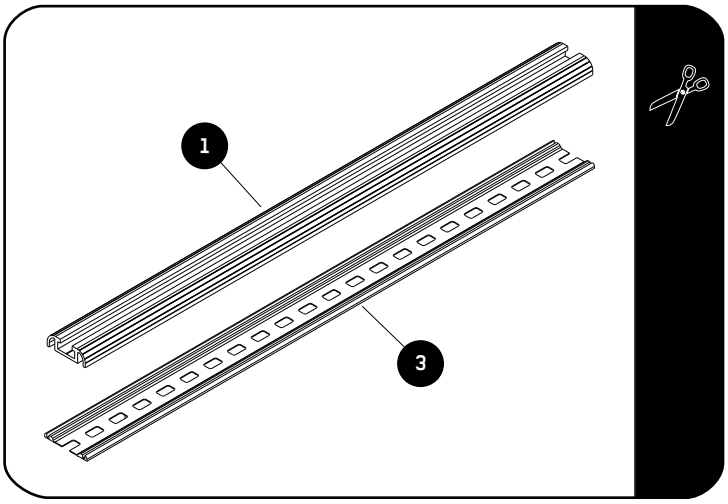

For best fitment results, it's recommended to verify placement of the tracks, legs, and load bars on the DiamondBack before drilling.

Remove the double sided tape from the bottom of the track.

Starting on one end, feed the Track Rubber (Item 3) onto the Track (Item 1).

Trim the Track Rubber to the correct length.

Do this on the remaining 5 Tracks.

2.2

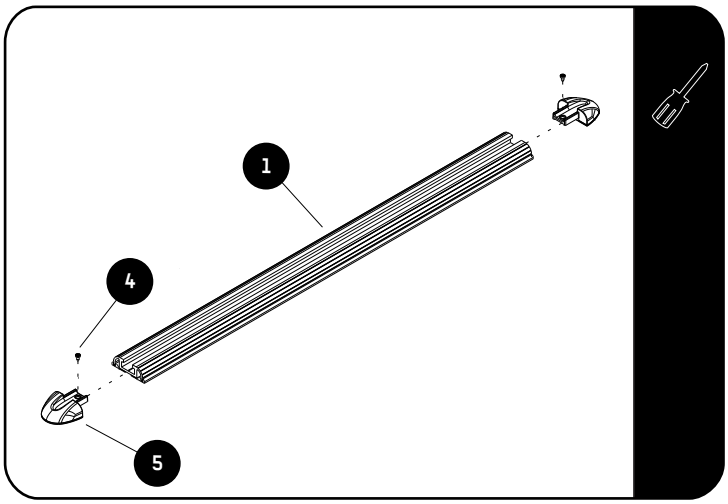

Assemble the Track End Caps (Item 4) to the four 600mm Tracks (Item 1) using M3 x 6 Self Tapping Screws (Item 5) as shown.

2.3

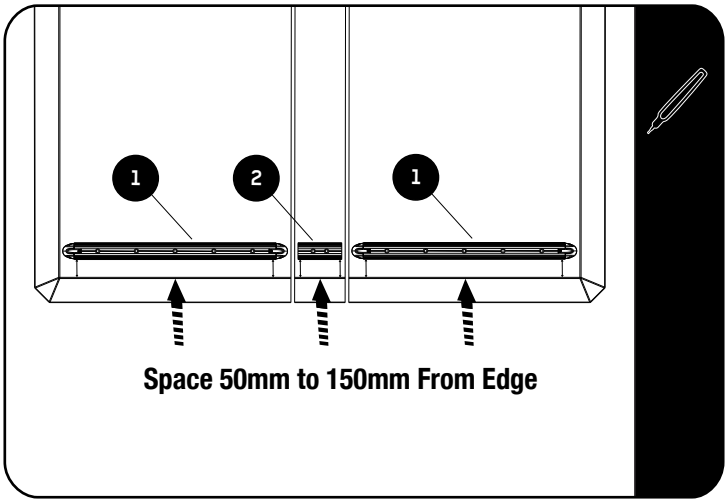

Center the Tracks (Items 1 & 2) horizontally on each panel of the DiamondBack.

Depending on width of your truck bed, space the Tracks 50mm to 150mm from the bent edge.

Max distance between holes is 1475mm.

Mark the pre-drilled mounting holes in the track onto the cover.

Due to the location of components underneath, using all 3 middle holes may not be possible. A minimum of 1 middle mounting hole must be used in conjunction with the outer holes.

Double-check the underside of the cover to verify that nothing will obstruct the washers and bolts at these locations including the possibility of the drill bit hitting your bed rails.

Should a marked hole position be inaccessible using a nut to fasten the screw, use the supplied jack nut. Refer to 2.4.

 © 2021 FRONT RUNNER VEHICLE OUTFITTERS

2 FIT AND SECURE TRACKS

2.4

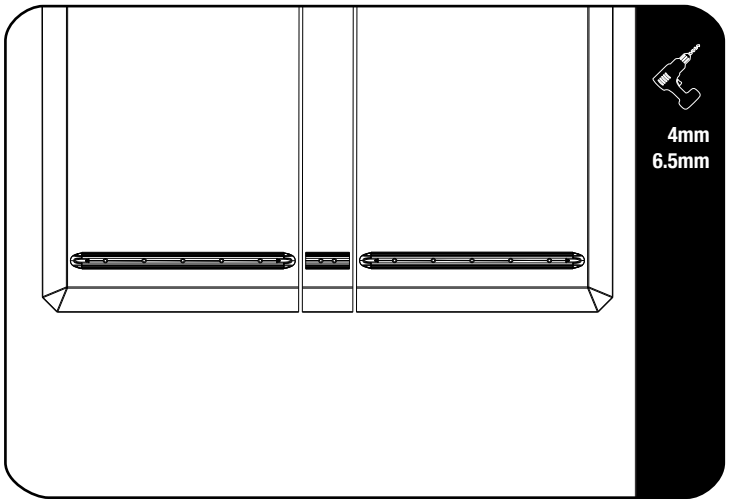

Remove the Tracks and drill a 4mm pilot hole on each of the marks you have made. Open the holes to 6.5mm.

2.5

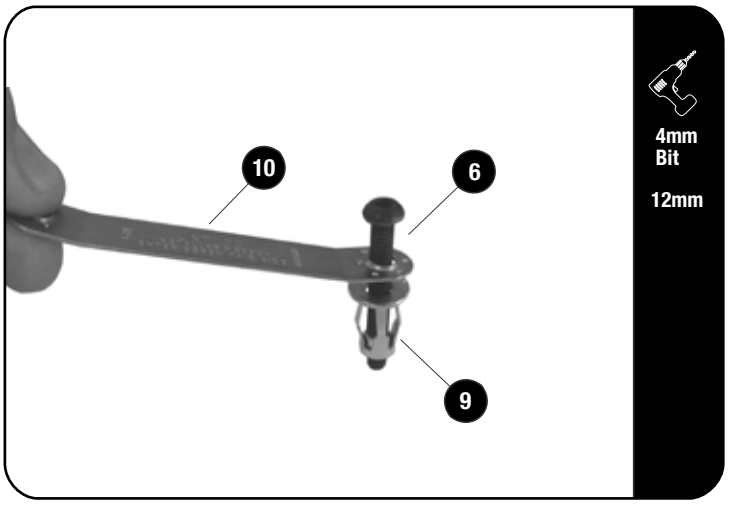

Open any inaccessible holes to 12mm.

Insert an M6 x 30 Button Head Bolt (Item 6) into the one side of the Installer Wrench (Item 9).

Loosely tighten a Jack Nut (Item 9) onto the Button Head Bolt as shown.

Place the assembly into one of the holes drilled in 2.3. Using a Cordless Drill and a 4mm Allen Key Bit, set the Jack Nut into the hole while holding the Installer Wrench firmly.

Make sure that the Jack Nut has pulled up all the way to the inside skin of the door panel.

2.6

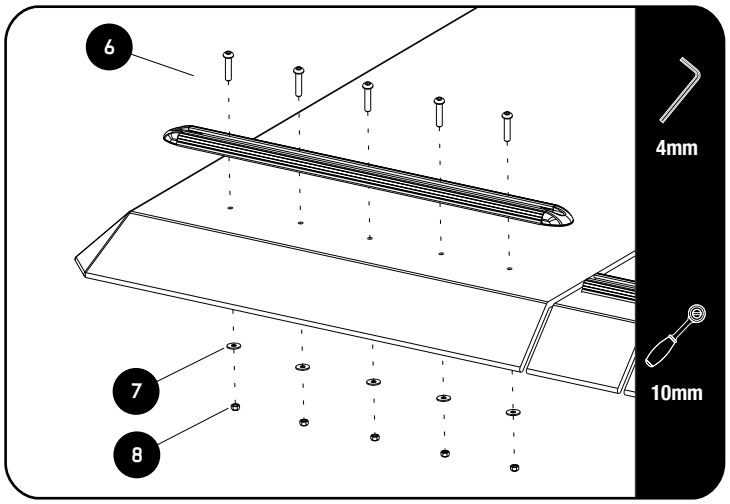

Before fitting the Tracks, place a small bead of silicone around each hole.

Secure the Tracks to the Cover using M6 x 30 Button Head Bolts, M6 x 19 x 1SS Flat Washers and M6 Nyloc Nuts (Items 6, 7 & 8) as shown.

© 2021 FRONT RUNNER VEHICLE OUTFITTERS

2 FIT AND SECURE TRACKS

2.7

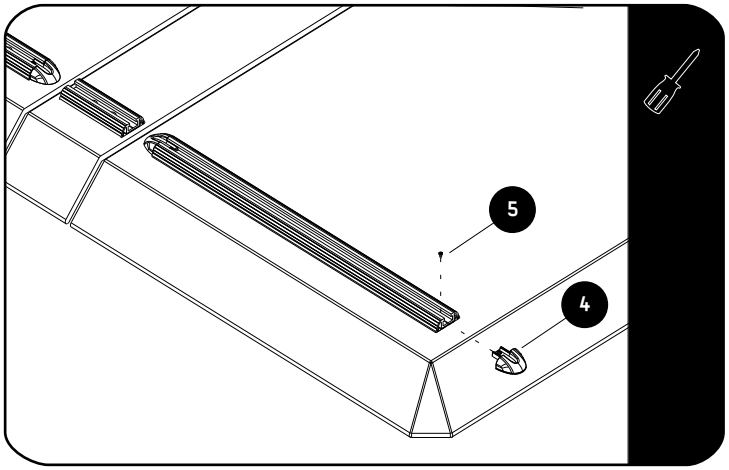

To fit your Front Runner load bars, remove the End Caps from one side Track.

Slide the stud plate into the Track and refit the End Caps.

3 FIT AND SECURE FEET AND LOAD BAR

3.1

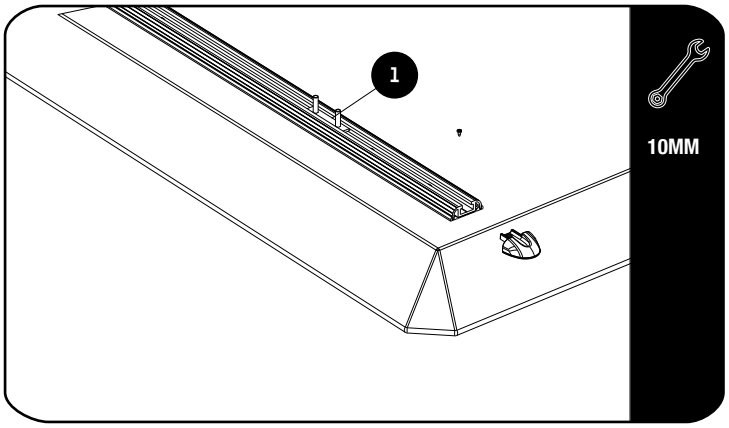

Refer to Figure 1.2 for fitment.

To fit your Front Runner load bars, remove the End Caps from one side Track.

Slide the M8 T-Bolts (Item 1) into the Track and refit the End Caps.

3.2

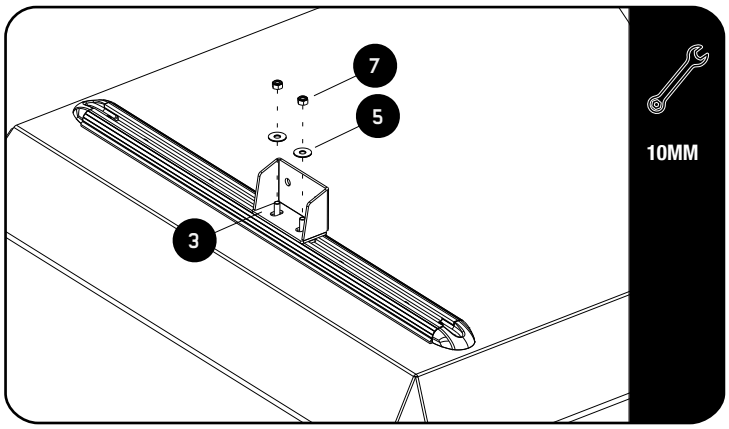

Loosely fit a Leg Base (Item 3) to the M8 T-Bolts using M8 x 25 x 2 Flat Washers and M8 Nyloc Nuts (Items 5 & 7).

 © 2021 FRONT RUNNER VEHICLE OUTFITTERS

3 FIT AND SECURE FEET AND LOAD BAR

3.3

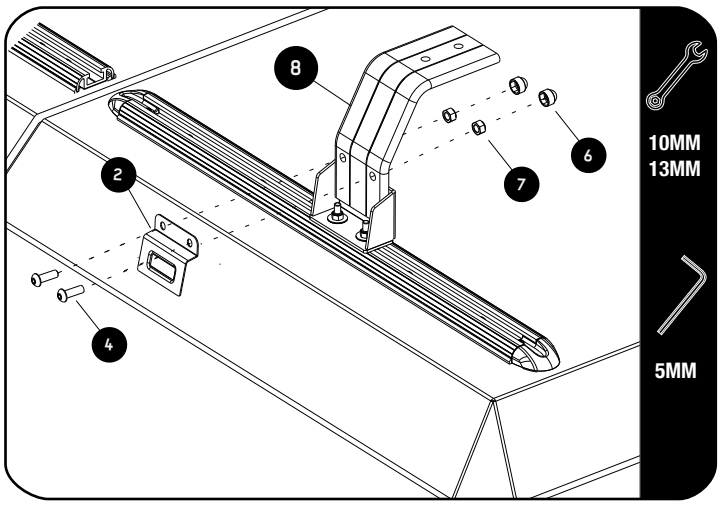

Assemble the Legs (Item 8) to the Leg Base (Item 3) by using M8 x 30 Button Heads & M8 Nyloc Nuts (Items 4 & 7) and the Cover Plate (Items 2).

3.4

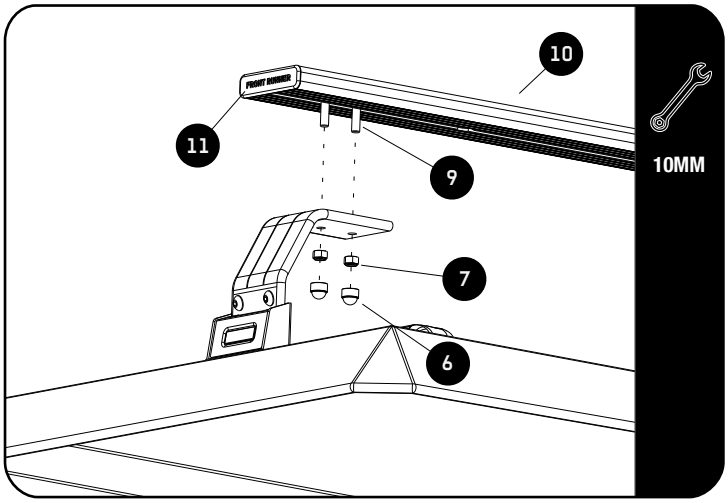

Loosely fit your Load Bar by using M8 x 25 Hex Bolts and M8 Nylocs (Items 7 & 9) as shown.

Insert the Slat End Cap (Item 6) into each end of the Load Bar.

3.5

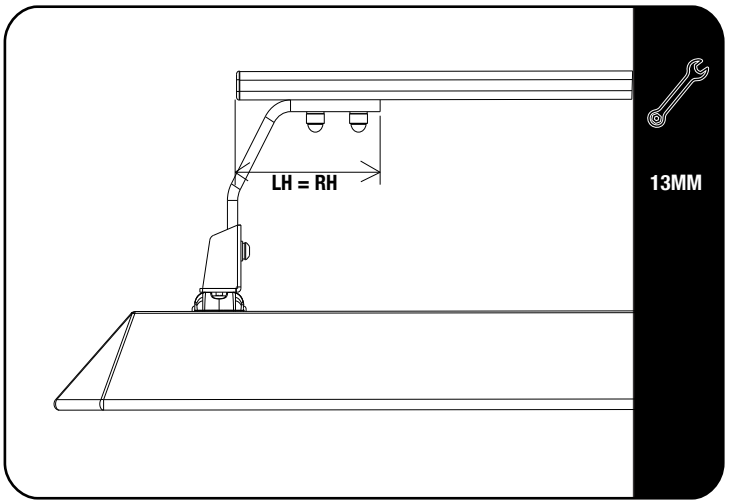

Center the Load Bar on the Legs before fully tightening (LH = RH).

© 2021 FRONT RUNNER VEHICLE OUTFITTERS

4 COMPLETION

4.1 Congratulations! You did it. Take a step back and admire your work!

5 INSTALL OTHER VEHICLE AND RACK ACCESSORIES

Now's the time to visit your favorite Front Runner Dealer in person or online.

IMPORTANT!

FRONT RUNNER RACK KITS OFTEN HAVE A HIGHER LOAD RATING THAN THE VEHICLES THEY ARE MOUNTED TO. PLEASE REFER TO YOUR SPECIFIC VEHICLE MANUFACTURER FOR A RECOMMENDED ROOF RATING. FRONT RUNNER CANNOT BE RESPONSIBLE FOR IMPROPER LOADING BEYOND THE VEHICLE MANUFACTURER'S STATED LOAD CAPACITY.

Be sure to tag us. We love to see our gear in action! #FrontRunnerOutfitters #BornToRoam

Share your adventures on:

© 2021 FRONT RUNNER VEHICLE OUTFITTERS