FRONT RUNNER

TOYOTA FORTUNER (2016 - CURRENT) SLIMSPORT RACK WIND FAIRING

ENG

RRAC375

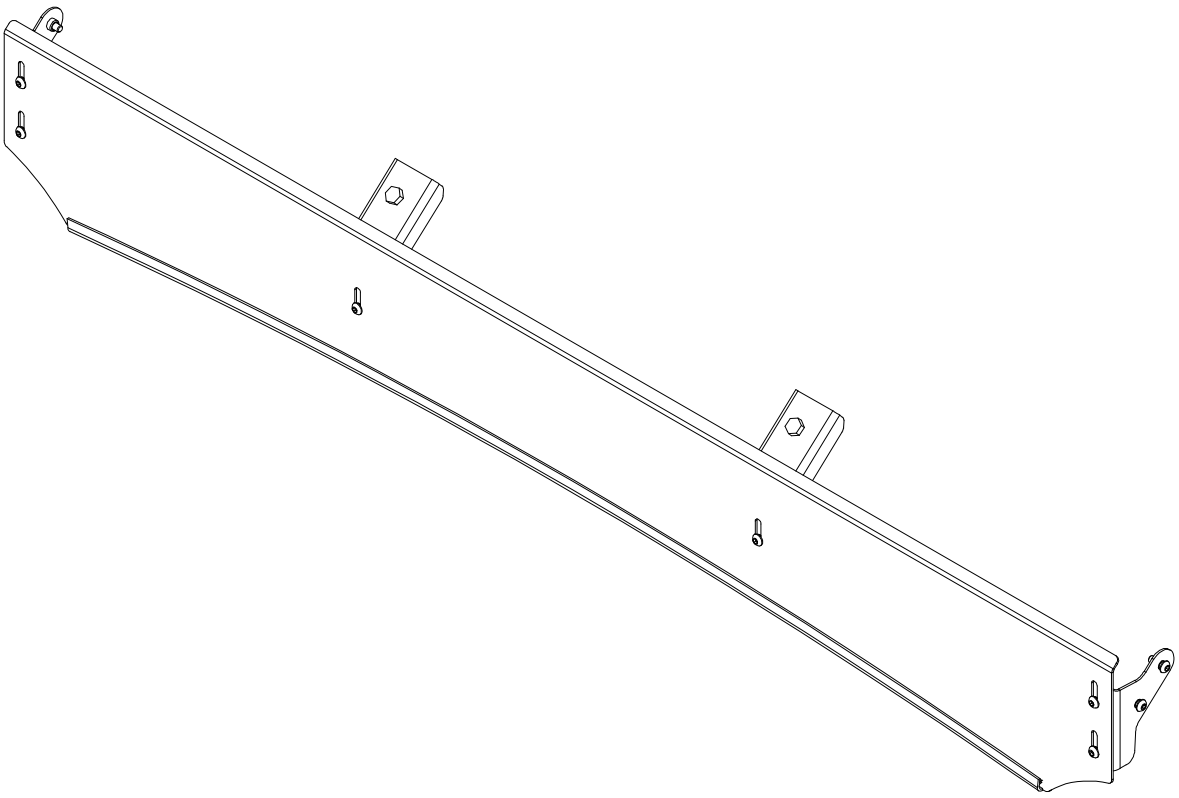

READ ME !

Thank you for purchasing a Toyota Fortuner (2016 - Current) Slimsport Rack Wind Fairing.

Before you start, take a moment to familiarize yourself with the Fitting Instructions and the included components.

Refer to Page 2 for a list of all the components, quantities and tools required.

IMPORTANT WARNING!

IT IS CRITICAL THAT ALL FRONT RUNNER PRODUCTS BE PROPERLY AND SECURELY ASSEMBLED AND ATTACHED TO YOUR VEHICLE. IMPROPER ATTACHMENT COULD RESULT IN AN AUTOMOBILE ACCIDENT, AND COULD CAUSE SERIOUS BODILY INJURY OR DEATH. YOU ARE RESPONSIBLE FOR ASSEMBLING AND SECURING ALL FRONT RUNNER PRODUCTS TO YOUR VEHICLE, CHECKING THE ATTACHMENTS PRIOR TO USE, AND PERIODICALLY INSPECTING THE PRODUCTS FOR ADJUSTMENT, WEAR AND DAMAGE. THEREFORE, YOU MUST READ AND UNDERSTAND ALL OF THE INSTRUCTIONS AND PRECAUTIONS SUPPLIED WITH YOUR FRONT RUNNER PRODUCT PRIOR TO INSTALLATION OR USE. IF YOU DO NOT UNDERSTAND ALL OF THE INSTRUCTIONS AND CAUTIONS, OR IF YOU HAVE NO MECHANICAL EXPERIENCE AND ARE NOT THOROUGHLY FAMILIAR WITH THE INSTALLATION PROCEDURES, YOU SHOULD HAVE THE PRODUCT INSTALLED BY A PROFESSIONAL INSTALLER OR OTHER QUALIFIED PERSONNEL.

NOTE: Front Runner will not be responsible for any damage caused by the failure to install the product according to these instructions.

Please call us if you have any questions about the installation of this product.

 © 2025 FRONT RUNNER VEHICLE OUTFITTERS

1 GET ORGANIZED

IN THE BOX

1	1 X	STD Wind Fairing
2	2 X	Side Support - 1 LH & 1 RH
3	2 X	Center Support
4	1 X	Wind Fairing Rubber - 1001mm
5	1 X	Clear Vinyl Protection Strip - 1500mm
6	10 X	M6 x 16 Button Head Bolt
7	2 X	M8 x 16 Hex Bolt
8	2 X	M8 Nyloc Nut
9	2 X	M8 Nut Cap

TOOLS NEEDED

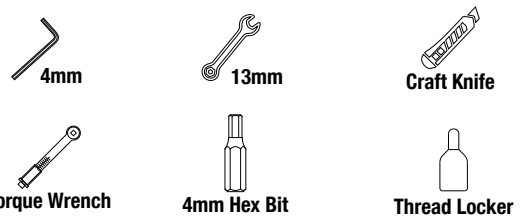

FIGURE 1.1

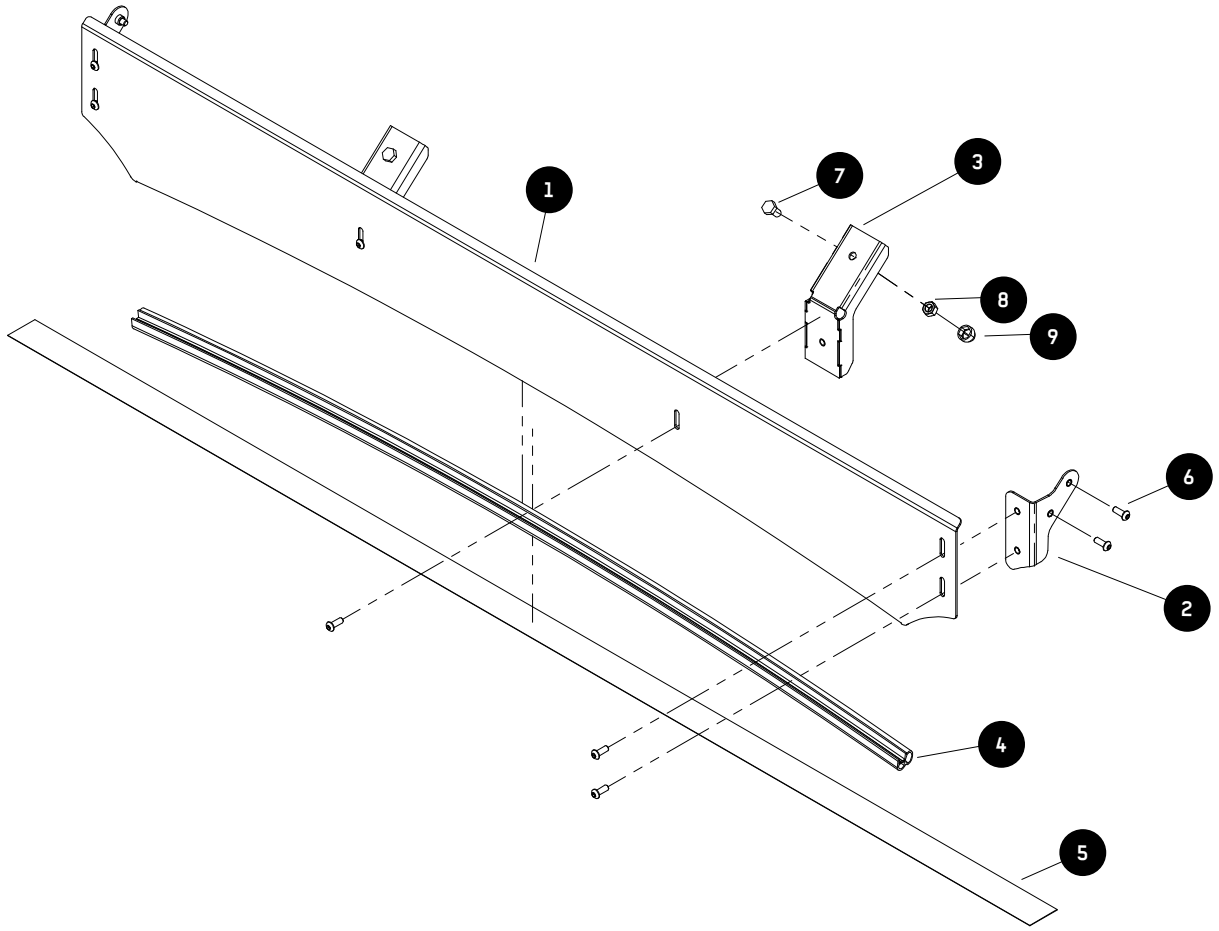

 © 2025 FRONT RUNNER VEHICLE OUTFITTERS

2 FIT AND SECURE

2.1

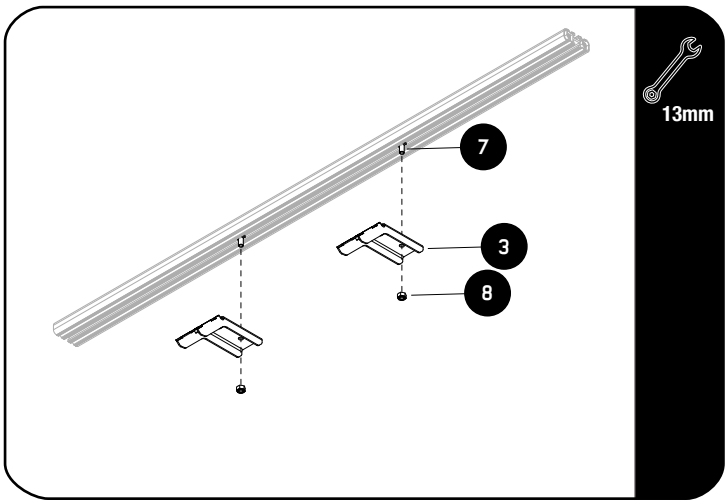

Slide two M8 x 16 Hex Bolts (Item 7) into the bottom T-slot of the front slat as shown.

Loosely assemble the Center Supports (Item 3) using the M8 Nyloc Nuts (Item 8).

2.2

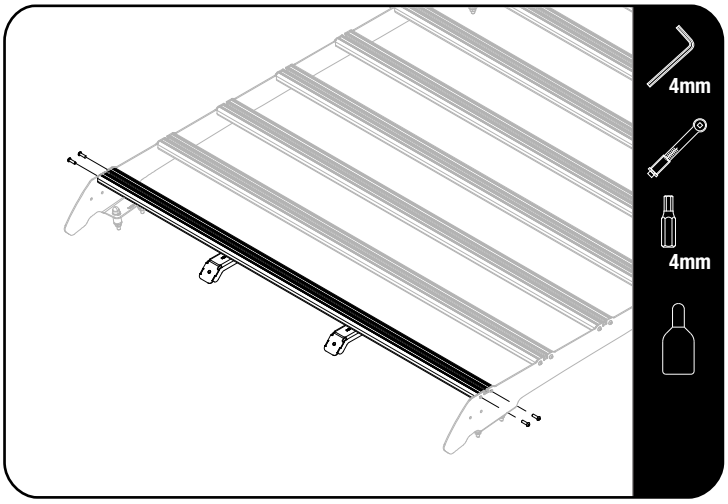

Fully tighten the front slat to the Foot Rails as shown by using the M6 x 20 Button Head Bolts provided with the Slimsport rack.

Apply a drop of Thread Locker on each M6 x 20 Button Head Bolt before securing the slat.

<u>Tightening Torque</u>:

M6 : 8-10Nm / 5.9 ft lb - 7.38 ft lb

2.3

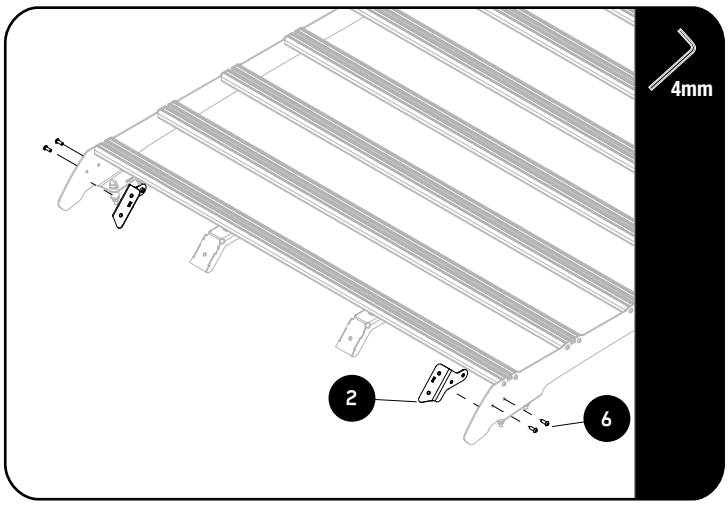

Secure the Side Supports (Item 2) to the Slimsport rack by fully tightening the M6 x 16 Button Head Bolts (Item 6).

<u>Tightening Torque</u>:

M6 : 8-10Nm / 5.9 ft lb - 7.38 ft lb

© 2025 FRONT RUNNER VEHICLE OUTFITTERS

2 FIT AND SECURE

2.4

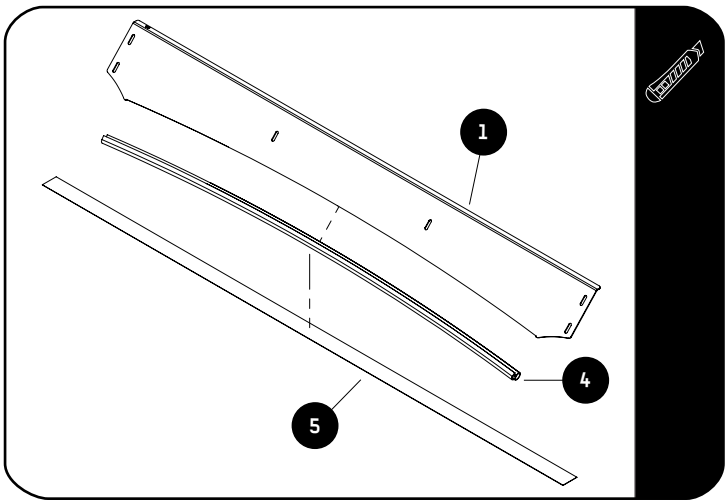

Fit the Wind Fairing Rubber (Item 4) to the Wind Fairing (Item 1), using the notched section as a guide, trim if needed.

Use the Clear Vinyl Strip (Item 5) included, to protect the paint work, where the Rubber Trim will make contact with the roof.

Use denatured alcohol to ensure the roof is clean before applying the Clear Vinyl Strip (Item 5).

Cut the Clear Vinyl Strip (Item 5) to fit the roof of the vehicle.

2.5

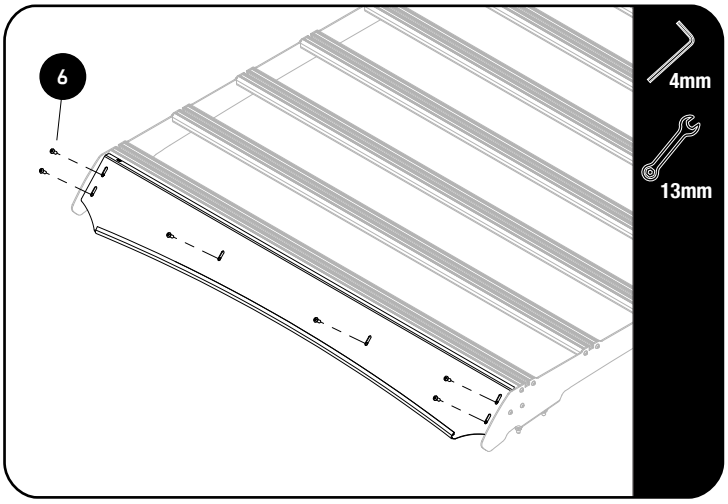

Adjust the height and fully tighten the Wind Fairing (Item 1) to the Side Supports (Item 2), using four M6 x 16 Button Head Bolts (Item 6), as shown.

Slide the Center Supports (Item 3) to align with the corresponding slots on the Wind Fairing (Item 1) and fully tighten the M8 Nyloc Nuts (Item 8) from Step 2.1, followed by the remaining two M6 x 16 Button Head Bolts (Item 6).

Tightening Torque:

M8 : 15-20Nm / 11.06 ft lb - 14.75 ft lb

Place the M8 Nut Caps (Item 9) over the M8 Nyloc Nuts (Item 8) from Step 2.1.

3 FINISH

Congratulations! You did it. Take a step back and admire your work!

4 INSTALL OTHER VEHICLE AND RACK ACCESSORIES

Now's the time to visit your favorite Front Runner Dealer in person or online.

Be sure to tag us. We love to see our gear in action! #FrontRunnerOutfitters

Share your adventures on:

© 2025 FRONT RUNNER VEHICLE OUTFITTERS