FRONT RUNNER

FORD EVEREST (2024-CURRENT) SLIMSPORT TRAY
40" LIGHT BAR WIND FAIRING

ENG

RRAC348

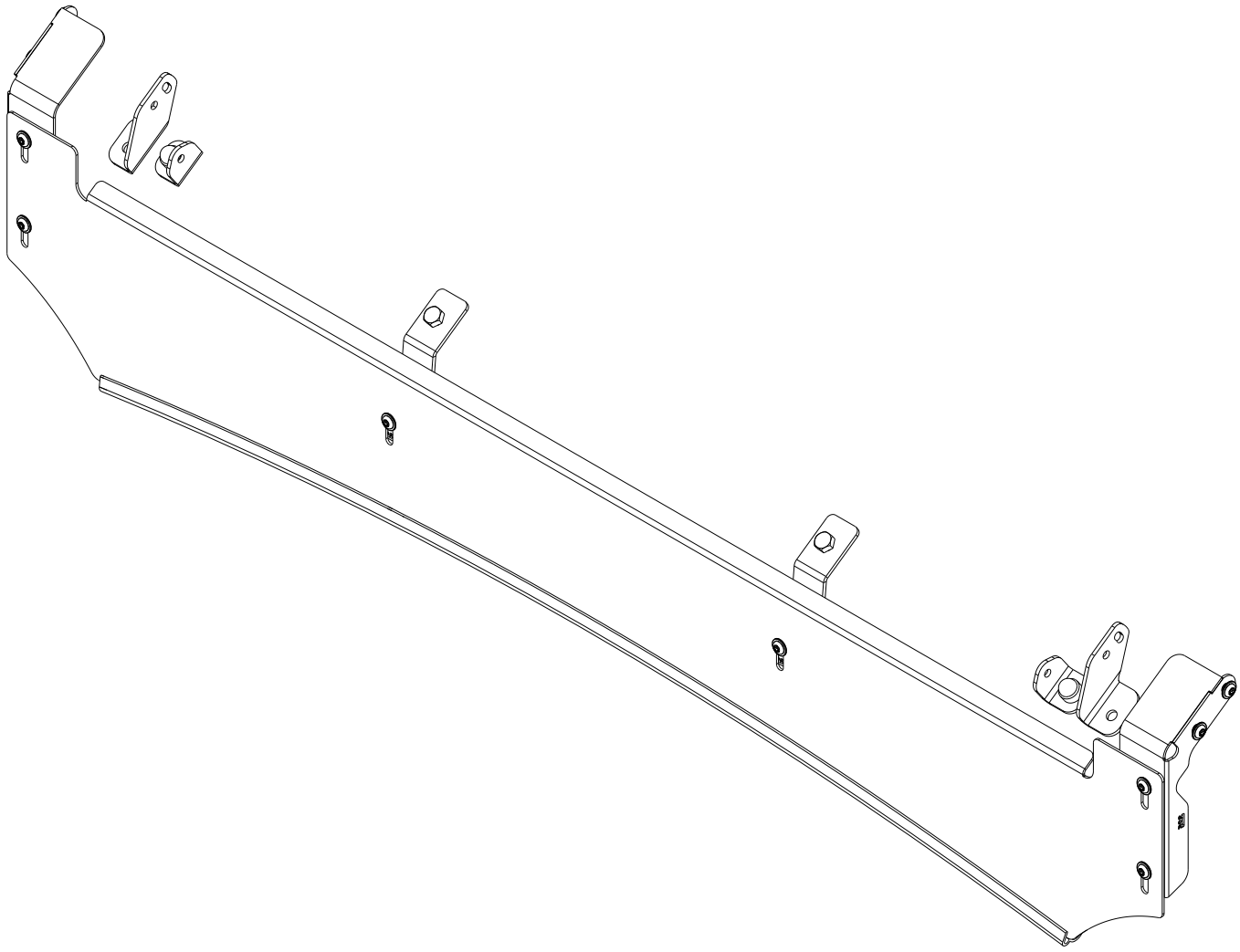

READ ME !

Thank you for purchasing a Front Runner Ford Everest Next Gen Slimsport Rack 40" Light Bar Wind Fairing

Before you start, take a moment to familiarize yourself with the Fitting Instructions and the included components.

Refer to Page 2 for a list of all the components, quantities and tools required.

IMPORTANT WARNING!

IT IS CRITICAL THAT ALL FRONT RUNNER PRODUCTS BE PROPERLY AND SECURELY ASSEMBLED AND ATTACHED TO YOUR VEHICLE. IMPROPER ATTACHMENT COULD RESULT IN AN AUTOMOBILE ACCIDENT, AND COULD CAUSE SERIOUS BODILY INJURY OR DEATH. YOU ARE RESPONSIBLE FOR ASSEMBLING AND SECURING ALL FRONT RUNNER PRODUCTS TO YOUR VEHICLE, CHECKING THE ATTACHMENTS PRIOR TO USE, AND PERIODICALLY INSPECTING THE PRODUCTS FOR ADJUSTMENT, WEAR AND DAMAGE. THEREFORE, YOU MUST READ AND UNDERSTAND ALL OF THE INSTRUCTIONS AND PRECAUTIONS SUPPLIED WITH YOUR FRONT RUNNER PRODUCT PRIOR TO INSTALLATION OR USE. IF YOU DO NOT UNDERSTAND ALL OF THE INSTRUCTIONS AND CAUTIONS, OR IF YOU HAVE NO MECHANICAL EXPERIENCE AND ARE NOT THOROUGHLY FAMILIAR WITH THE INSTALLATION PROCEDURES, YOU SHOULD HAVE THE PRODUCT INSTALLED BY A PROFESSIONAL INSTALLER OR OTHER QUALIFIED PERSONNEL.

NOTE: Front Runner will not be responsible for any damage caused by the failure to install the product according to these instructions.

Please call us if you have any questions about the installation of this product.

 © 2024 FRONT RUNNER VEHICLE OUTFITTERS

1 GET ORGANIZED

IN THE BOX

1	1 X	Light Bar Wind Fairing
2	2 X	Side Bracket Assembly - 1 LH & 1 RH
3	2 X	Middle Bracket Assembly
4	2 X	Light Bar Mounting Bracket - Low Profile
5	2 X	Light Bar Mounting Bracket - High Profile, 1 LH & 1 RH
6	1 X	Wind Fairing Rubber - 1050mm Long
7	2 X	M8 x 20 Hex Bolt
8	2 X	M8 Nyloc Nut
9	2 X	M8 Nut Cap
10	10 X	M6 x 16 Button Head Flange Bolt
11	1 X	Vynil Strip

IN THE BOX

12	2 X	M8 x 12 Button head Bolt
13	2 X	M8 Thin Nut
14	2 X	Schnoor Washer

TOOLS NEEDED

FIGURE 1.1

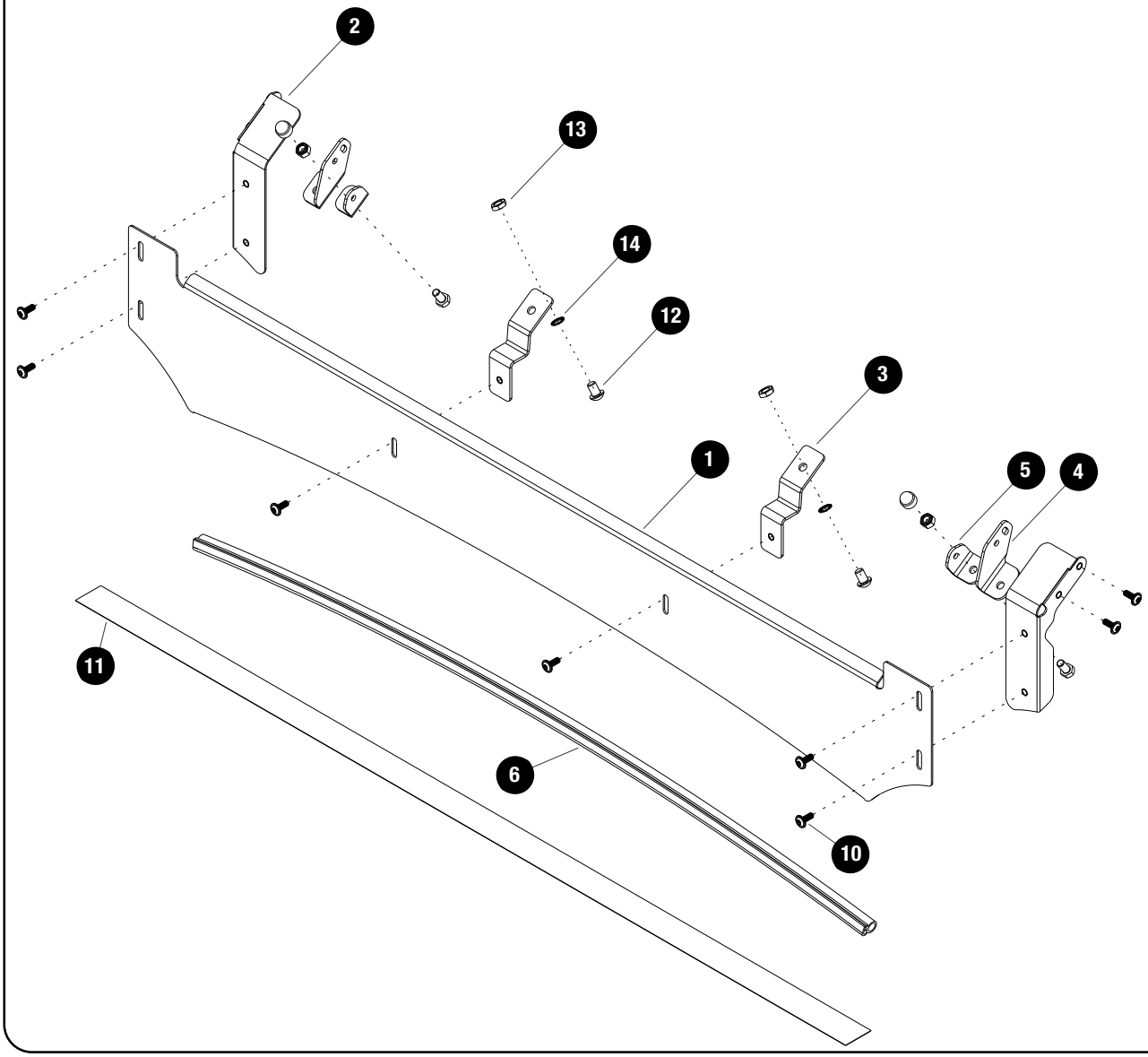

 © 2024 FRONT RUNNER VEHICLE OUTFITTERS

2 FIT AND SECURE

2.1

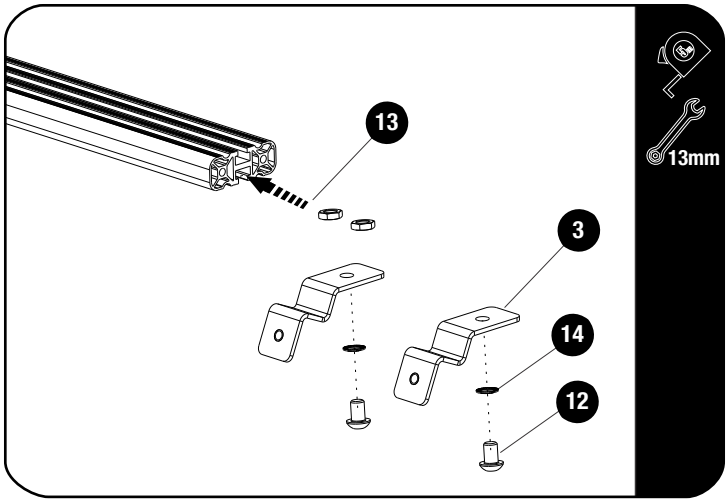

Start by removing the Front Slat from the Roof Rack.

Slide two M8 Thin Nuts (Item 13) into the bottom T-Slot of the Front Slat. Center the two Middle Bracket Assemblies (Item 3) around the Middle of the slat using a tape measure and secure using a M8 x 16 Button Head Bolts and M8 Schnorr Washers (Item 12 & 14). Do not tighten yet.

2.2

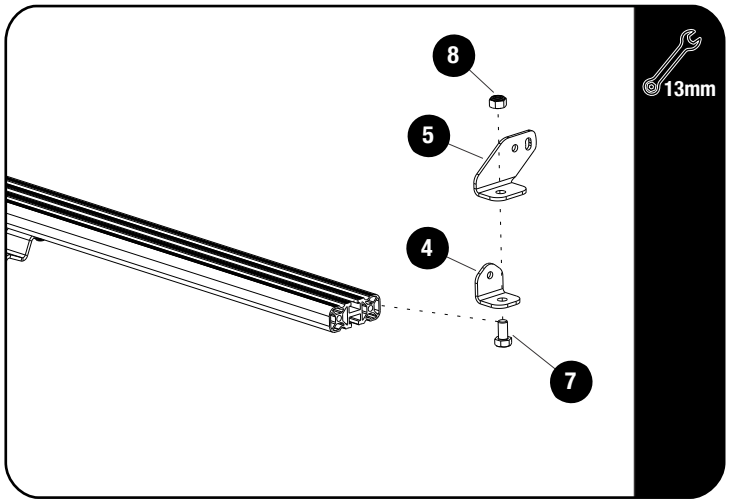

Fit the Light Bar Mounting Bracket Low OR High Profile LH & RH (Item 4 OR 5) for the 40" Light Bar, using two M8 x 20 Hex Bolts and two M8 Nyloc Nuts (Items 7 & 8). Fit the light bar and center it on the slat before fully tightening the brackets.

Replace the Front Slat, using the bottom holes on the foot rails.

Tightening Torque:

M8 : 15-20Nm / 11.06 ft lb - 14.75 ft lb

2.3

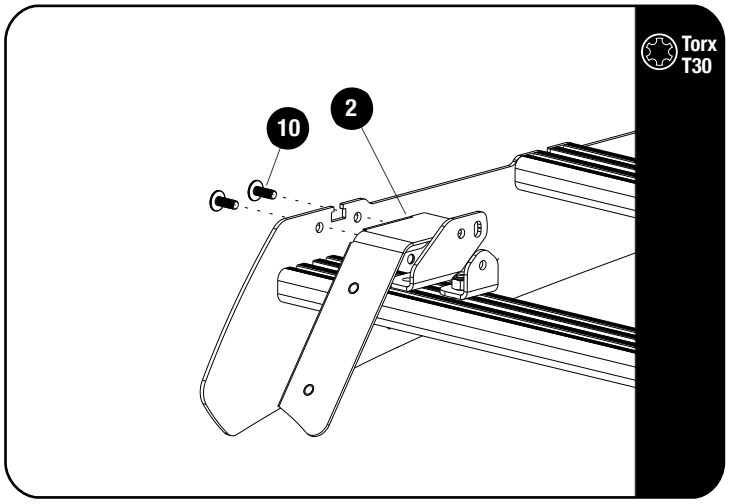

Secure the Side Bracket Assemblies LH & RH (Item 2) to the foot rails top holes, as shown, using M6 x 16 Button Head Flange Bolts (Item 10)

Tightening Torque:

M6 : 8-10Nm / 5.9 ft lb - 7.38 ft lb

© 2024 FRONT RUNNER VEHICLE OUTFITTERS

2 FIT AND SECURE

2.4

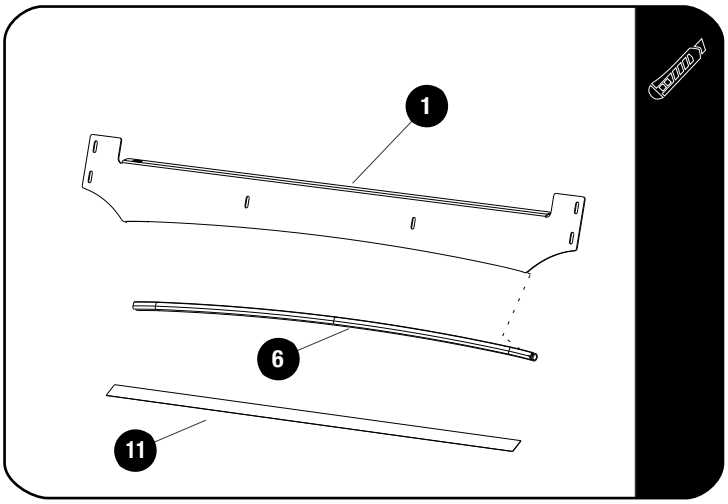

Fit the Wind Fairing Rubber (Item 6) to the Wind Fairing (Item 1). Using the notched section as a guide, trim if needed.

Use the Clear Protection Strip (Item 11) included to protect the roof paint work, where the Rubber Trim will be making contact with the roof.

Apply Denatured Alcohol to make sure the roof is clean before applying.

Cut the Clear Protection strip to fit the roof of the Vehicle.

2.5

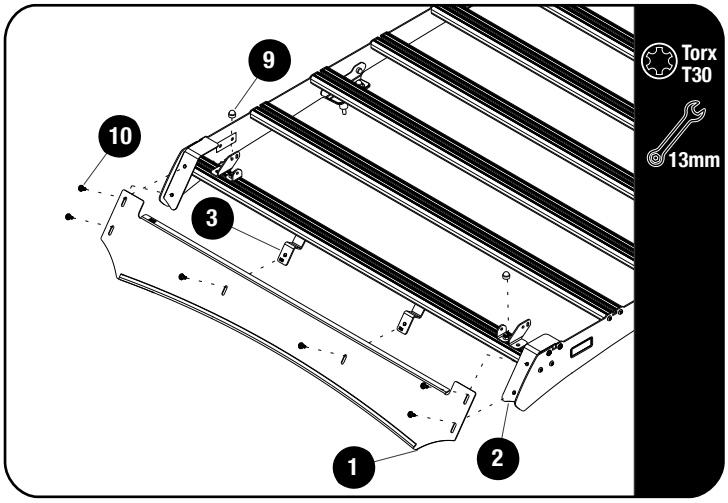

Secure the Wind Fairing (Item 1) first to the Side Bracket Assemblies (Item 2), using M6 x 16 Button Head Flange Bolts (Item 10).

Slide the Middle Bracket Assemblies (Item 3) to line up with the corresponding slots on the Wind Fairing (Item 1) and secure using M6 x 16 Button Head Flange Bolts (Item 10).

Tighten all fasteners and place M8 Nut Caps on all M8 Nyloc Nuts (Item 9)

Tightening Torque:

M6 : 8-10Nm / 5.9 ft lb - 7.38 ft lb

Tightening Torque:

M8 : 15-20Nm / 11.06 ft lb - 14.75 ft lb

3 FINISH

Congratulations! You did it. Take a step back and admire your work!

4 INSTALL OTHER VEHICLE AND RACK ACCESSORIES

Now's the time to visit your favorite Front Runner Dealer in person or online.

Be sure to tag us. We love to see our gear in action! #FrontRunnerOutfitters #BornToRoam

Share your adventures on:

© 2024 FRONT RUNNER VEHICLE OUTFITTERS