FRONT RUNNER

FORD EVEREST (2024-CURRENT) SLIMSPORT TRAY

ENG

RRAC347

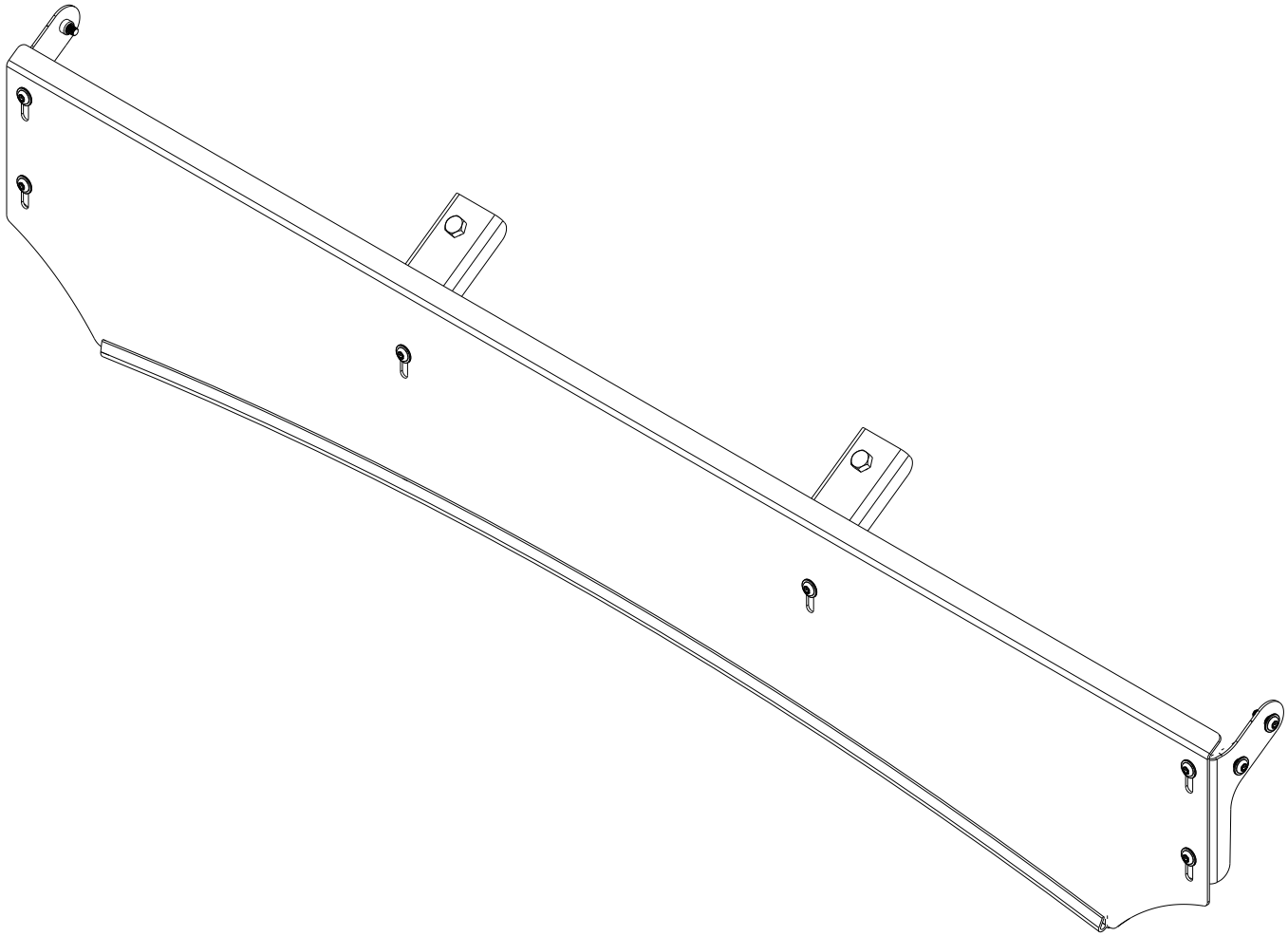

READ ME !

Thank you for purchasing a Front Runner Ford Everest Next Gen Slimsport Rack Wind Fairing

Before you start, take a moment to familiarize yourself with the Fitting Instructions and the included components.

Refer to Page 2 for a list of all the components, quantities and tools required.

IMPORTANT WARNING!

IT IS CRITICAL THAT ALL FRONT RUNNER PRODUCTS BE PROPERLY AND SECURELY ASSEMBLED AND ATTACHED TO YOUR VEHICLE. IMPROPER ATTACHMENT COULD RESULT IN AN AUTOMOBILE ACCIDENT, AND COULD CAUSE SERIOUS BODILY INJURY OR DEATH. YOU ARE RESPONSIBLE FOR ASSEMBLING AND SECURING ALL FRONT RUNNER PRODUCTS TO YOUR VEHICLE, CHECKING THE ATTACHMENTS PRIOR TO USE, AND PERIODICALLY INSPECTING THE PRODUCTS FOR ADJUSTMENT, WEAR AND DAMAGE. THEREFORE, YOU MUST READ AND UNDERSTAND ALL OF THE INSTRUCTIONS AND PRECAUTIONS SUPPLIED WITH YOUR FRONT RUNNER PRODUCT PRIOR TO INSTALLATION OR USE. IF YOU DO NOT UNDERSTAND ALL OF THE INSTRUCTIONS AND CAUTIONS, OR IF YOU HAVE NO MECHANICAL EXPERIENCE AND ARE NOT THOROUGHLY FAMILIAR WITH THE INSTALLATION PROCEDURES, YOU SHOULD HAVE THE PRODUCT INSTALLED BY A PROFESSIONAL INSTALLER OR OTHER QUALIFIED PERSONNEL.

NOTE: Front Runner will not be responsible for any damage caused by the failure to install the product according to these instructions.

Please call us if you have any questions about the installation of this product.

 © 2024 FRONT RUNNER VEHICLE OUTFITTERS

1 GET ORGANIZED

IN THE BOX

1	1 X	Wind Fairning
2	2 X	Middle Bracket Assembly
3	2 X	Side Bracket Assembly - 1 LH & 1 RH
4	1 X	Wind Fairing Rubber - 1050mm
5	2 X	M8 x 16 Hex Bolt
6	2 X	M8 Nyloc Nut
7	2 X	M8 Nut Cap
8	10 X	M6 x 16 Button Head Flange
9	1 X	Vylin Strip

TOOLS NEEDED

FIGURE 1.1

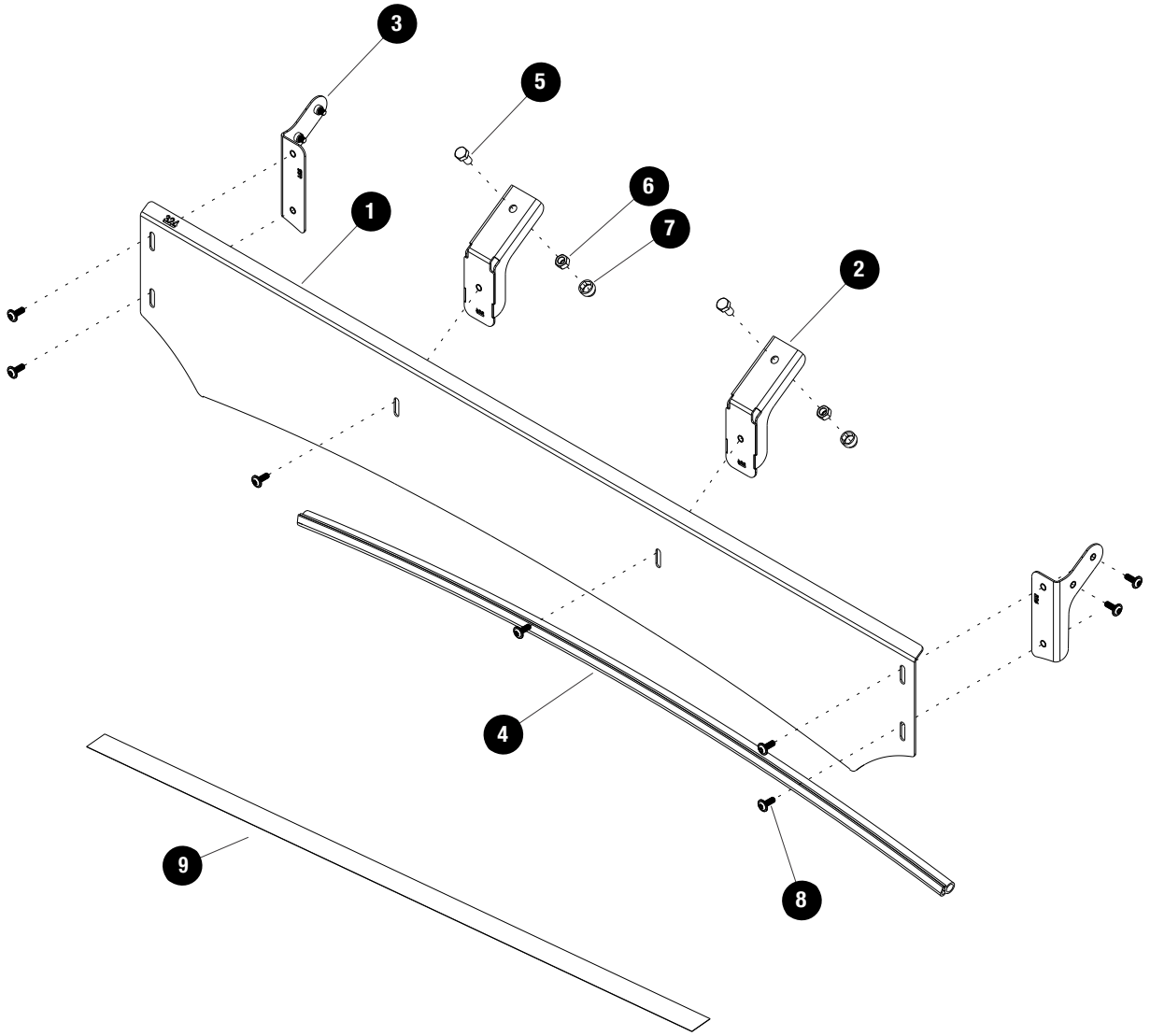

 © 2024 FRONT RUNNER VEHICLE OUTFITTERS

2 FIT AND SECURE

2.1

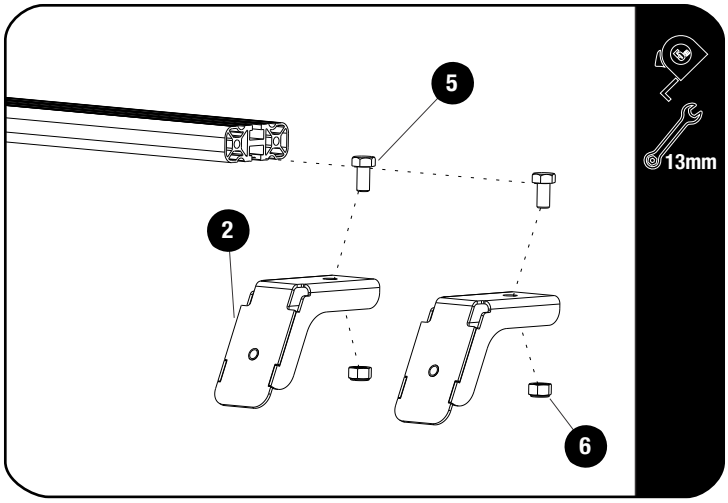

Start by Removing the Front Slat of the Roof Rack.

Slide two M8 x 16 Hex Bolts (Item 5) into the bottom T-Slot of the Front Slat. Center the Middle Bracket Assemblies (Item 2) around the Middle of the slat using a tape measure and secure using two M8 Nyloc Nuts (Item 6). Do Not Tighten yet.

Replace the Front Slat

2.2

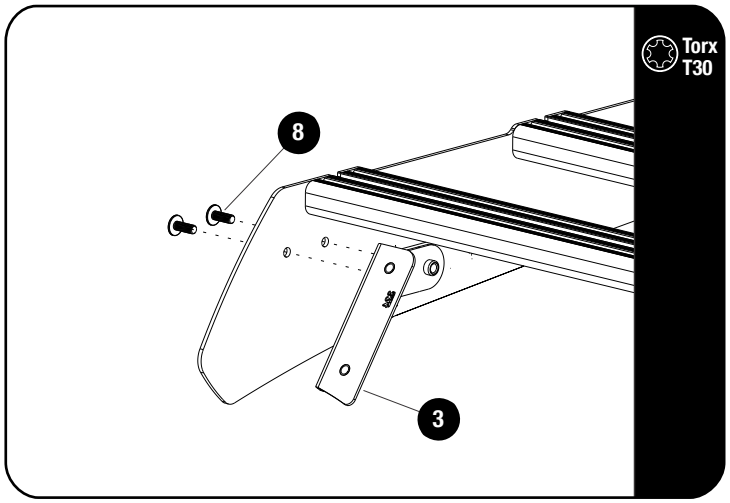

Secure the Side Bracket Assemblies LH & RH (Item 3) to the foot rails bottom holes as shown using M6 x 16 Button Head Flange Bolts (Item 8).

<u>Tightening Torque</u>:

M6 : 8-10Nm / 5.9 ft lb - 7.38 ft lb

2.3

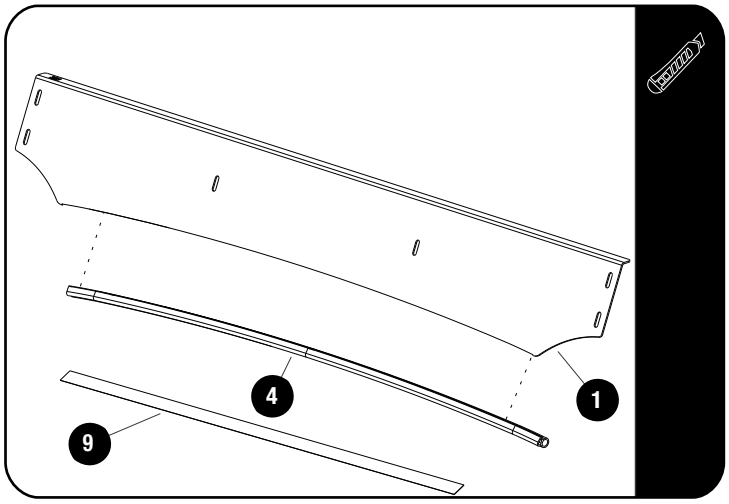

Fit the Wind Fairing Rubber (Item 4) to the Wind Fairing (Item 1). Using the notched section as a guide, trim if needed.

Use the Clear Protection Strip (Item 9) included to protect the roof paint work, where the Rubber Trim will be making contact with the roof.

Apply Denatured Alcohol to make sure the roof is clean before applying.

Cut the Clear Protection strip to fit the roof of the Vehicle.

© 2024 FRONT RUNNER VEHICLE OUTFITTERS

2 FIT AND SECURE

2.4

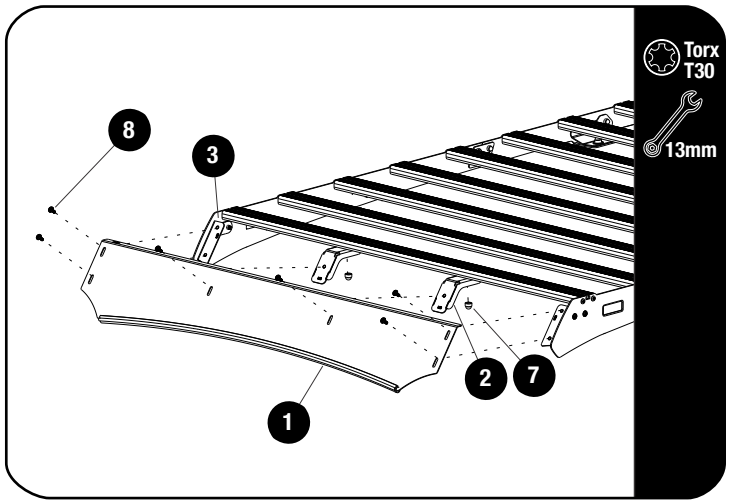

Secure the Wind Fairing (Item 1) first to the Side Bracket Assemblies (Item 3), using M6 x 16 Button Head Flange Bolts (Item 8).

Slide the Middle Bracket Assemblies (Item 2) to line up with the corresponding slots on the Wind Fairing (Item 1) and secure using M6 x 16 Button Head Flange Bolts (Item 8).

Tighten all fasteners and place a M8 Nut Cap (Item 7) on each M8 Nyloc Nut.

Tightening Torque:

M8 : 15-20Nm / 11.06 ft lb - 14.75 ft lb

Tightening Torque:

M6 : 8-10Nm / 5.9 ft lb - 7.38 ft lb

3 FINISH

Congratulations! You did it. Take a step back and admire your work!

4 INSTALL OTHER VEHICLE AND RACK ACCESSORIES

Now's the time to visit your favorite Front Runner Dealer in person or online.

Be sure to tag us. We love to see our gear in action! #FrontRunnerOutfitters #BornToRoam

Share your adventures on:

© 2024 FRONT RUNNER VEHICLE OUTFITTERS