FRONT RUNNER

FORD RANGER T6.2 (2022-CURRENT)/VW AMAROK (2023-CURRENT) DOUBLE CAB SLIMSPORT RACK 40" LIGHT BAR WIND FAIRING

ENG

RRAC312

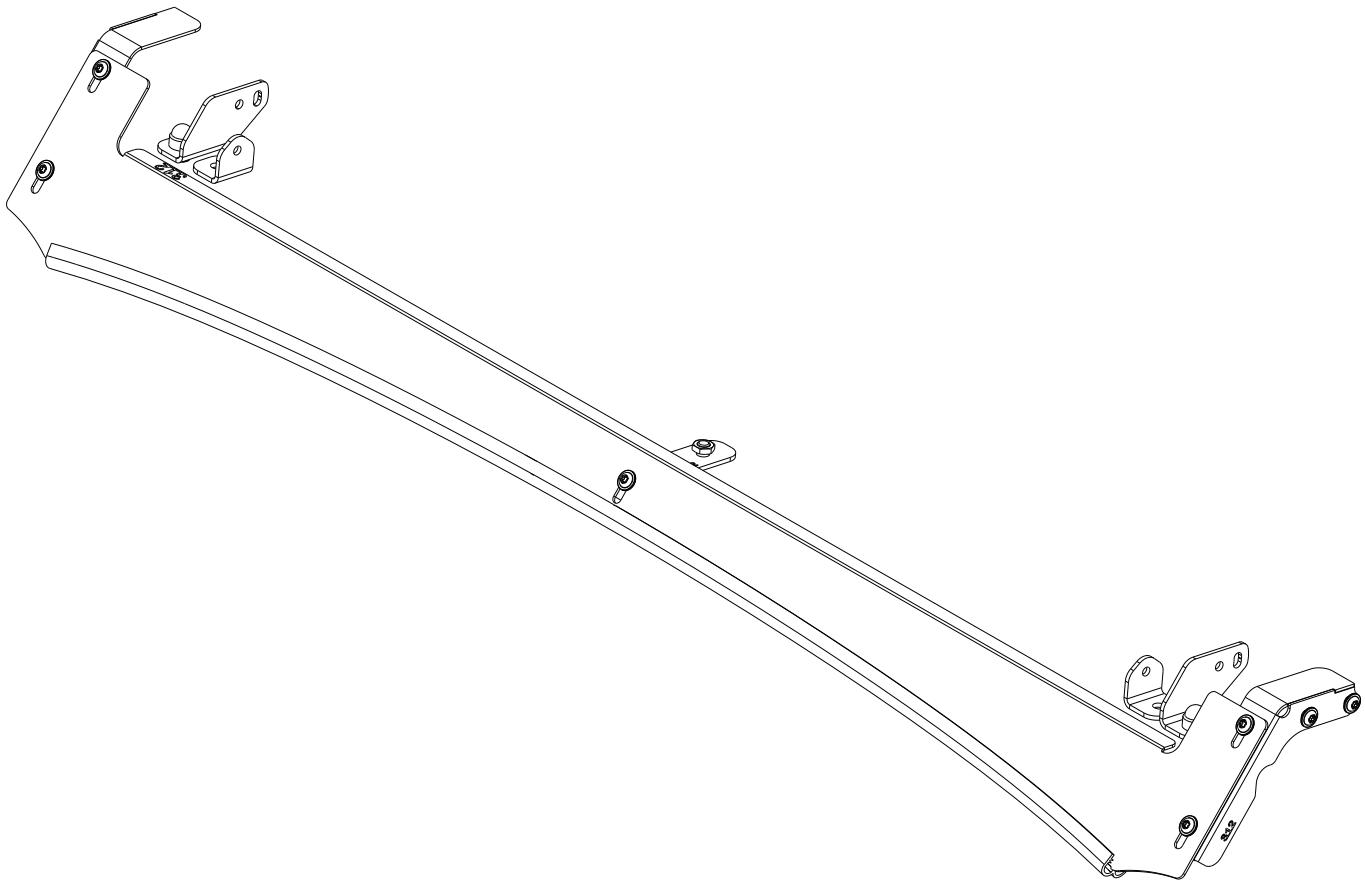

READ ME !

Thank you for purchasing a Front Runner Ford Ranger T6.2 (2022-Current)/VW Amarok (2023-Current) Double Cab Slimsport Rack 40" Light Bar Wind Fairing

Before you start, take a moment to familiarize yourself with the Fitting Instructions and the included components.

Refer to Page 2 for a list of all the components, quantities and tools required.

IMPORTANT WARNING!

IT IS CRITICAL THAT ALL FRONT RUNNER PRODUCTS BE PROPERLY AND SECURELY ASSEMBLED AND ATTACHED TO YOUR VEHICLE. IMPROPER ATTACHMENT COULD RESULT IN AN AUTOMOBILE ACCIDENT, AND COULD CAUSE SERIOUS BODILY INJURY OR DEATH. YOU ARE RESPONSIBLE FOR ASSEMBLING AND SECURING ALL FRONT RUNNER PRODUCTS TO YOUR VEHICLE, CHECKING THE ATTACHMENTS PRIOR TO USE, AND PERIODICALLY INSPECTING THE PRODUCTS FOR ADJUSTMENT, WEAR AND DAMAGE. THEREFORE, YOU MUST READ AND UNDERSTAND ALL OF THE INSTRUCTIONS AND PRECAUTIONS SUPPLIED WITH YOUR FRONT RUNNER PRODUCT PRIOR TO INSTALLATION OR USE. IF YOU DO NOT UNDERSTAND ALL OF THE INSTRUCTIONS AND CAUTIONS, OR IF YOU HAVE NO MECHANICAL EXPERIENCE AND ARE NOT THOROUGHLY FAMILIAR WITH THE INSTALLATION PROCEDURES, YOU SHOULD HAVE THE PRODUCT INSTALLED BY A PROFESSIONAL INSTALLER OR OTHER QUALIFIED PERSONNEL.

NOTE: Front Runner will not be responsible for any damage caused by the failure to install the product according to these instructions.

Please call us if you have any questions about the installation of this product.

 © 2023 FRONT RUNNER VEHICLE OUTFITTERS

1 GET ORGANIZED

IN THE BOX

1	1 X	Light Bar Wind Fairing
2	1 X	Wind Fairing LH Support Bracket
3	1 X	Wind Fairing RH Support Bracket
4	1 X	Wind Fairing Mid Support Bracket
5	1 X	Light Bar Bracket 01 LH - High Profile
6	1 X	Light Bar Bracket 01 RH - High Profile
7	2 X	Light Bar Bracket 02 - Low Profile
8	1 X	Rubber Seal 1043mm Long
9	9 X	M6 x 16 Flange Button Head Screw
10	1 X	M8 Thin Hex Nut
11	1 X	M8 x 12 Button Head Screw
12	1 X	M8 Schnorr Washer
13	2 X	M8 x 16 Hex Bolt
14	2 X	M8 Nyloc Nut
15	2 X	M8 Nut Cap

TOOLS NEEDED

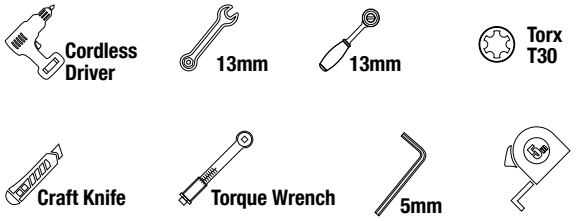

FIGURE 1.1

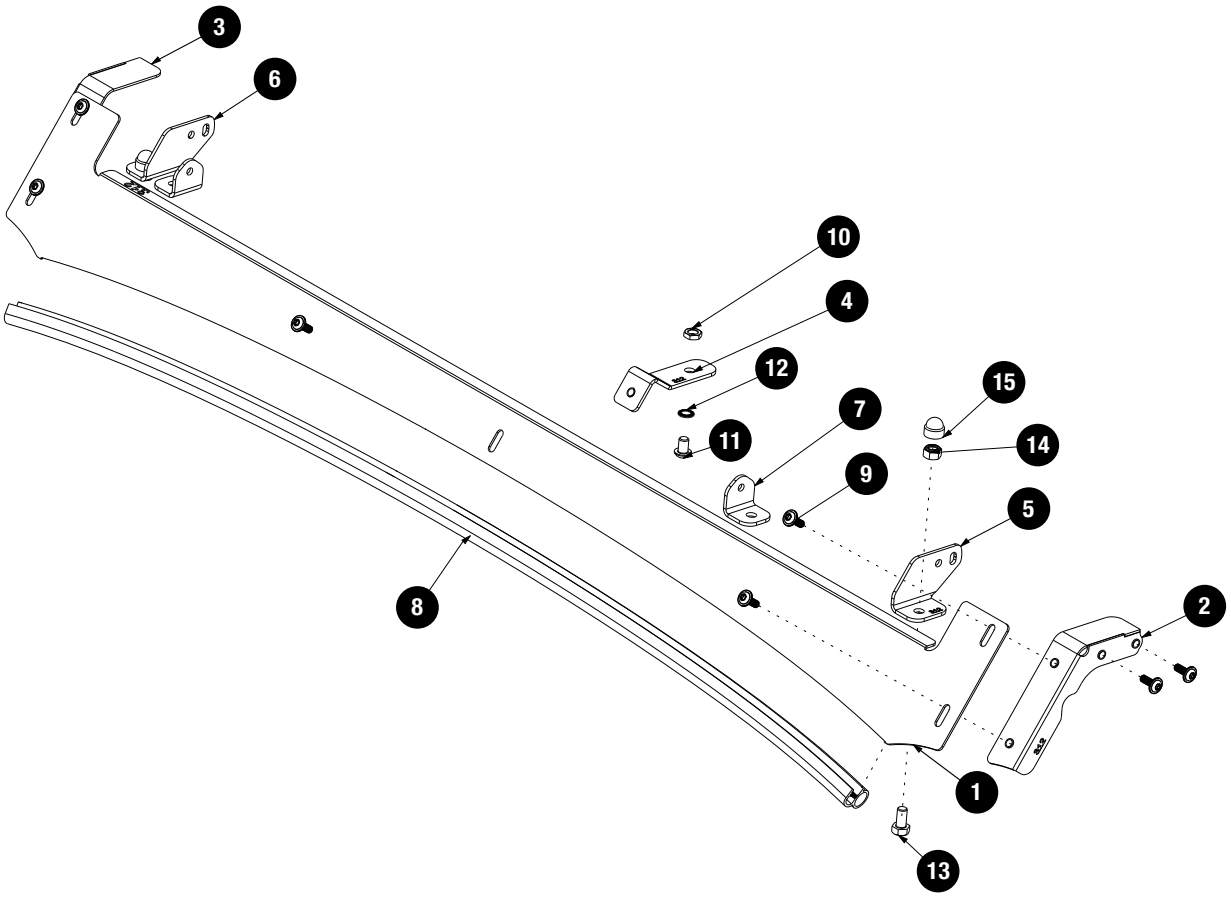

 © 2023 FRONT RUNNER VEHICLE OUTFITTERS

2 FIT AND SECURE

2.1

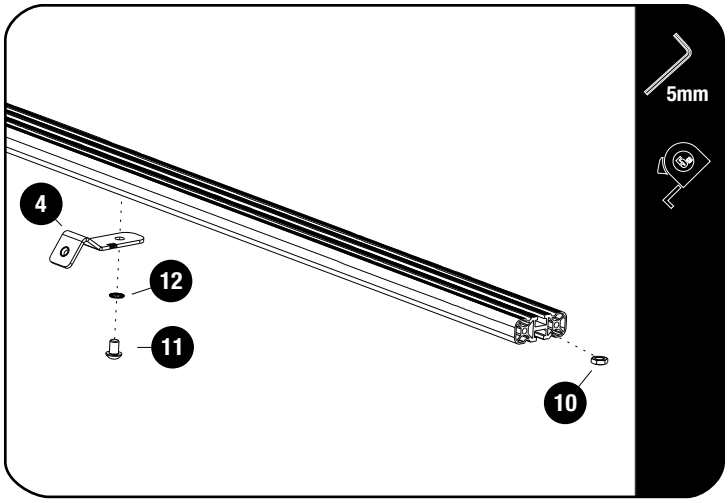

Start by removing the front slat of the Roof Rack.

Slide one M8 Thin Nut (Item 10) into the T-Slot of the front slat. Center the Mid Support Bracket (Item 4) in the Middle of the slat using a tape measure and secure using a Schnorr Washer and M8 x 12 Button Head Bolt (Item 11 & 12). Fully tighten.

2.2

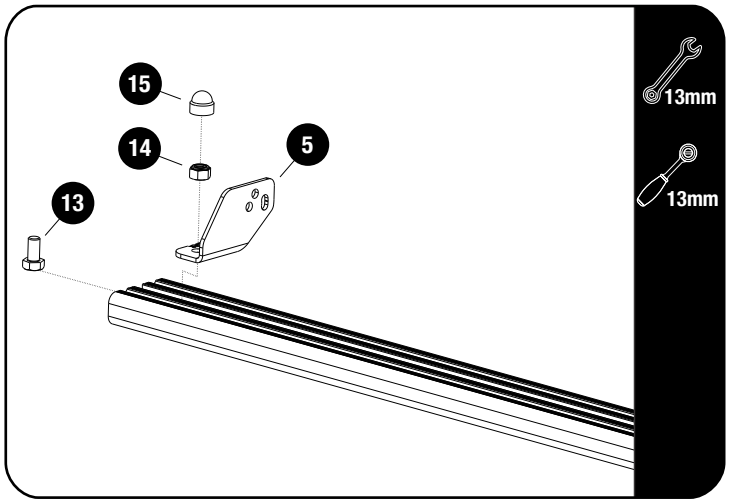

Fit the Light Bar Bracket 01 LH / RH (Item 5 & 6) for for the 40" Light Bar, using M8 x 16 Hex Bolt & M8 Nyloc Nut (Items 13 & 14). Fit the light bar and center it on the slat before fully tightening the brackets.

Place M8 Nut Caps (Item 15) over all Hex Bolts.

2.3

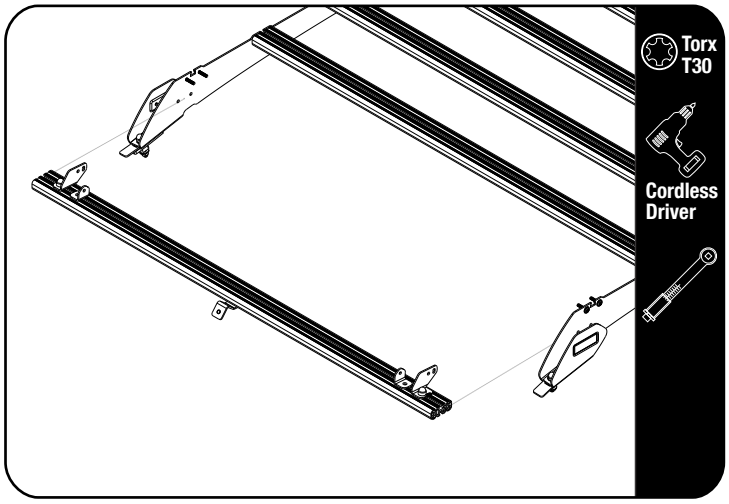

Secure assembly 2.2 to the front two top holes on the foot rails using the fasteners supplied with KSFR006.

Tightening Torque 8-10Nm / 5.9 ft lb - 7.38 ft lb.

Use a little Oil / Anti-Seize on screw threads before inserting. Note these are Thread forming screws.

© 2023 FRONT RUNNER VEHICLE OUTFITTERS

2 FIT AND SECURE

2.4

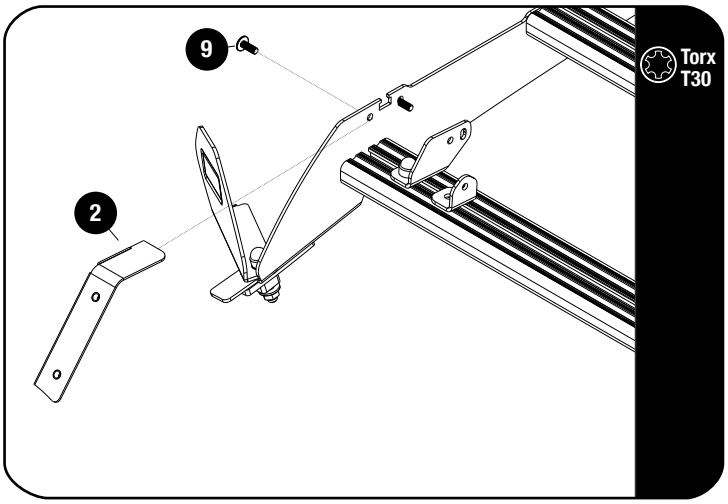

Swing over the Dimple plate to allow access to tighten the bolts.

Secure the Wind Fairing Side supports LH / RH (Item 2 & 3) to the foot rails top holes as shown using M6 x 16 Flange Button Heads (Item 9).

Tightening Torque 8-10Nm / 5.9 ft lb - 7.38 ft lb.

2.5

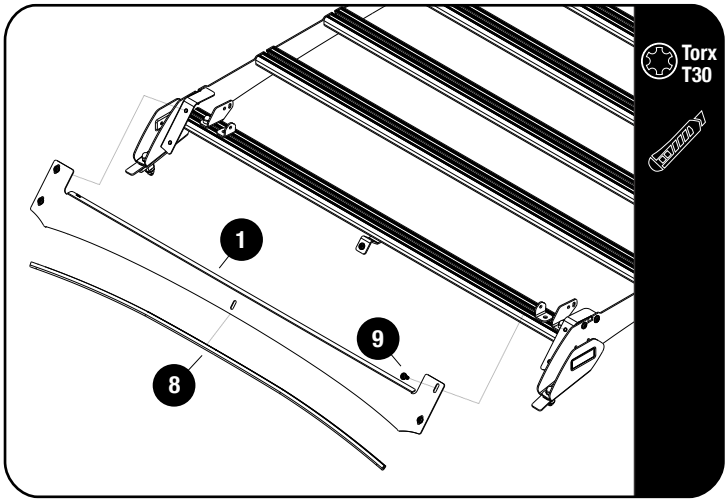

Fit the Wind Fairing Rubber (Item 8) to the Light Bar Wind Fairing (Item 1). Using the notched section as a guide, trim if needed.

Secure the Light Bar Wind Fairing assembly to the rack assembly, using M6 x 16 Flange Button Heads (Item 9) and fully tighten.

Reposition the dimple plates and fully tighten.

Tightening Torque 8-10Nm / 5.9 ft lb - 7.38 ft lb.

3 FINISH

Congratulations! You did it. Take a step back and admire your work!

4 INSTALL OTHER VEHICLE AND RACK ACCESSORIES

Now's the time to visit your favorite Front Runner Dealer in person or online.

Be sure to tag us. We love to see our gear in action! #FrontRunnerOutfitters #BornToRoam

Share your adventures on:

© 2023 FRONT RUNNER VEHICLE OUTFITTERS