FRONT RUNNER

LEXUS GX 460 (2010-CURRENT) SLIMSPORT RACK WIND FAIRING

ENG

RRAC274

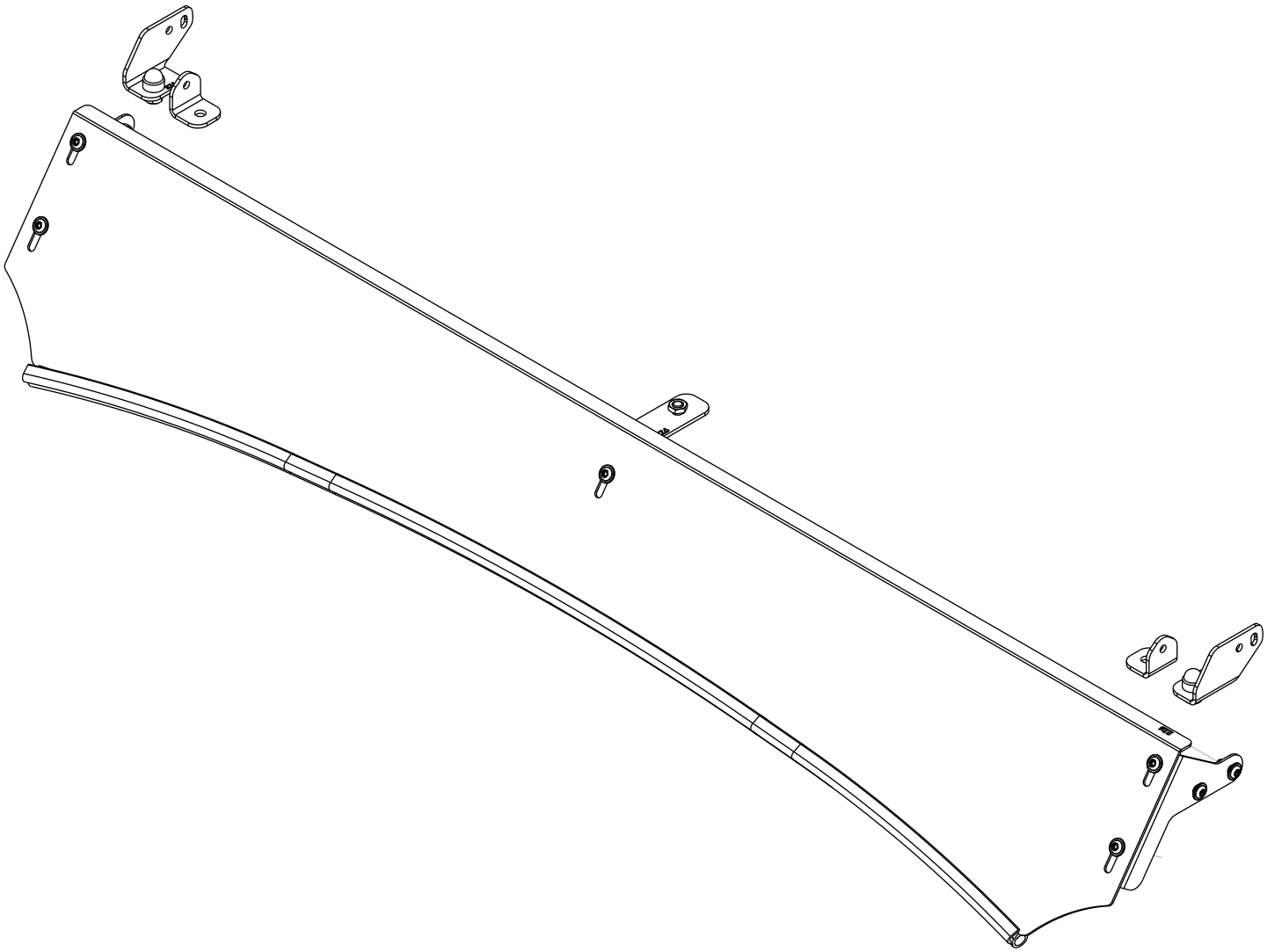

READ ME !

Thank you for purchasing a Front Runner Lexus GX 460 Slimsport Rack Wind Fairing.

Before you start, take a moment to familiarize yourself with the Fitting Instructions and the components received.

Refer to Page 2 for a list of all the components, quantities and tools required.

IMPORTANT WARNING!

IT IS CRITICAL THAT ALL FRONT RUNNER PRODUCTS BE PROPERLY AND SECURELY ASSEMBLED AND ATTACHED TO YOUR VEHICLE. IMPROPER ATTACHMENT COULD RESULT IN AN AUTOMOBILE ACCIDENT, AND COULD CAUSE SERIOUS BODILY INJURY OR DEATH. YOU ARE RESPONSIBLE FOR ASSEMBLING AND SECURING ALL FRONT RUNNER PRODUCTS TO YOUR VEHICLE, CHECKING THE ATTACHMENTS PRIOR TO USE, AND PERIODICALLY INSPECTING THE PRODUCTS FOR ADJUSTMENT, WEAR AND DAMAGE. THEREFORE, YOU MUST READ AND UNDERSTAND ALL OF THE INSTRUCTIONS AND PRECAUTIONS SUPPLIED WITH YOUR FRONT RUNNER PRODUCT PRIOR TO INSTALLATION OR USE. IF YOU DO NOT UNDERSTAND ALL OF THE INSTRUCTIONS AND CAUTIONS, OR IF YOU HAVE NO MECHANICAL EXPERIENCE AND ARE NOT THOROUGHLY FAMILIAR WITH THE INSTALLATION PROCEDURES, YOU SHOULD HAVE THE PRODUCT INSTALLED BY A PROFESSIONAL INSTALLER OR OTHER QUALIFIED PERSONNEL.

NOTE: Front Runner will not be responsible for any damage caused by the failure to install the product according to these instructions.

Please call us if you have any questions about the installation of this product.

 © 2023 FRONT RUNNER VEHICLE OUTFITTERS

1 GET ORGANIZED

IN THE BOX		
1	1 X	Wind Fairing
2	2 X	Wind Fairing Side Support 1LH & 1RH
3	1 X	Wind Fairing Mid Support
4	2 X	Light Bar Bracket 01 1LH & 1RH
5	2 X	Light Bar Bracket 02
6	9 X	M6x16 Flange Button Head
7	3 X	M8 x 16 Hex Head Bolt
8	3 X	M8 Nyloc Nut
9	3 X	M8 Nut Cap
10	2 X	Wind Fairing Rubber (1050mm)

TOOLS NEEDED

FIGURE 1.1

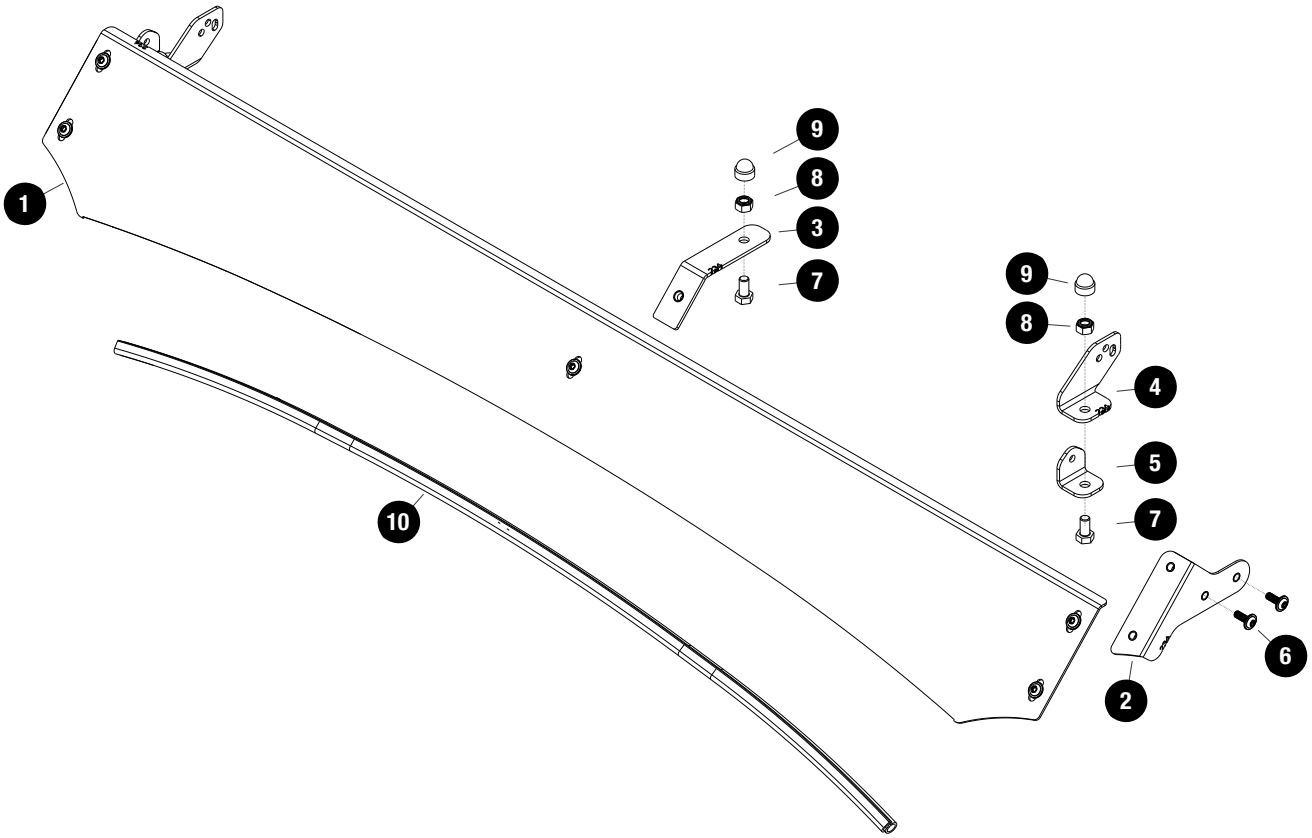

 © 2023 FRONT RUNNER VEHICLE OUTFITTERS

2 FIT AND SECURE

2.1

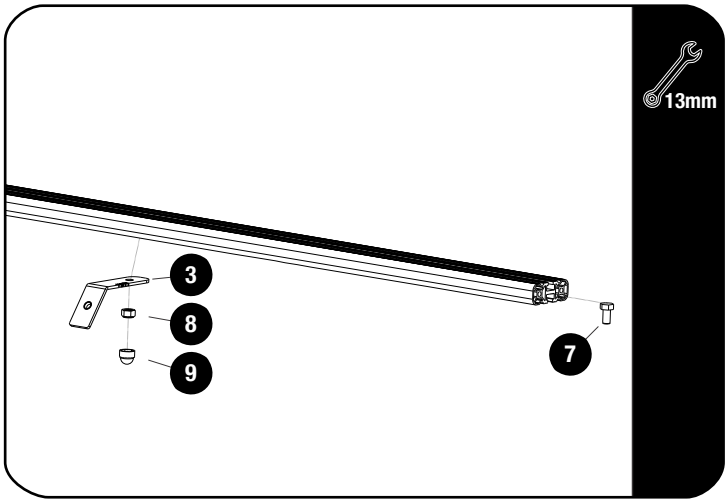

Slide one M8 x 16 Hex Head Bolt (Item 7) into the T-slot of the front slat. Center the mid support bracket in the middle of the slat and secure using M8 Nyloc Nut (Item 8). Fully tighten.

Place a M8 Nut Cap over the Nyloc Nut.

2.2

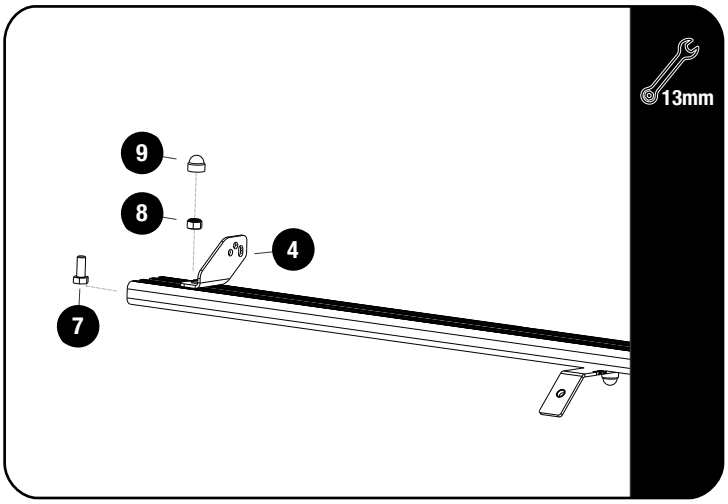

Fit the Light Bar Bracket 01 LH / RH (Item 4) for for the 40" Light Bar, using M8x16 Hex Bolt & M8 Nyloc Nut (Items 7 & 8). Fit the light bar and center it on the slat before fully tightening the brackets.

Place M8 Nut Caps (Item 9) over all Hex Bolts..

2.3

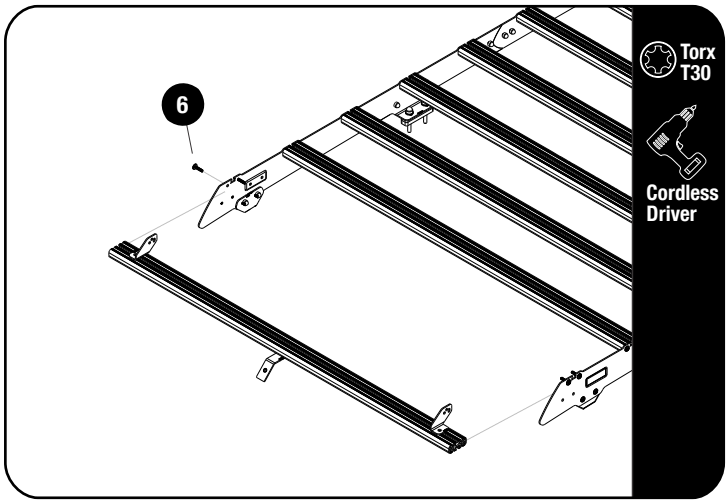

Secure assembly 2.2 to the front two top holes on the foot rails using the fasteners supplied with KSLG001.

Apply a little Anti Seize / oil on screw threads before inserting. Note these are thread forming screws.

Tightening Torque 8-10Nm / 5.9 ft lb - 7.38 ft lb.

© 2023 FRONT RUNNER VEHICLE OUTFITTERS

2 FIT AND SECURE

2.4

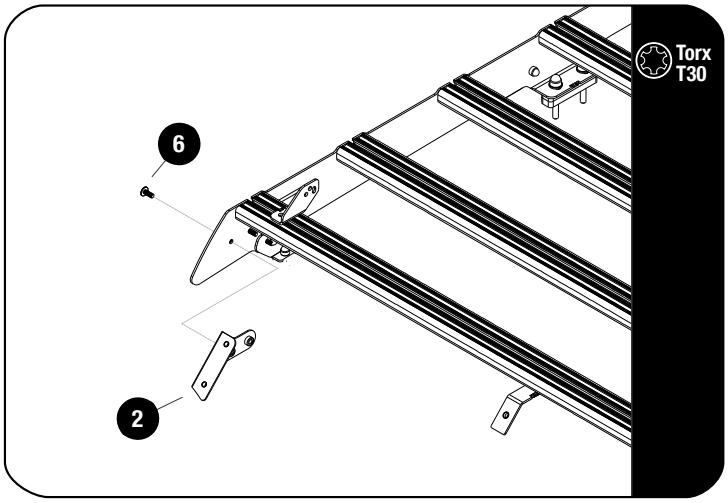

Secure the Wind Fairing Side Supports LH / RH (Item 2) to the foot rails top holes as shown using M6x16 Flange Button Head (Item 6).

2.5

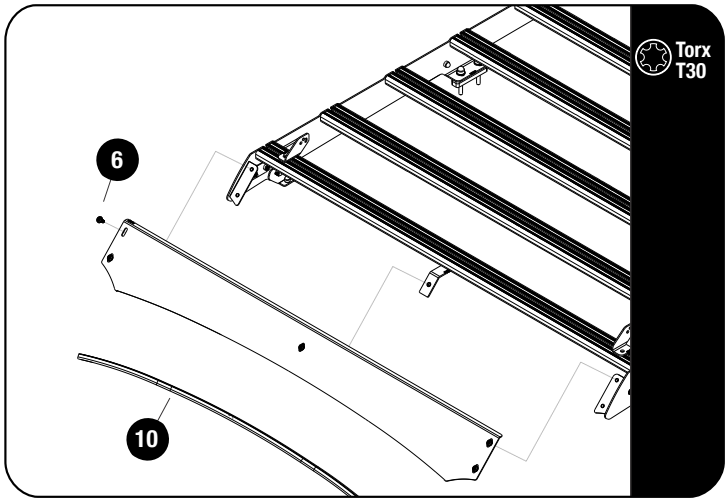

Fit the Wind Fairing Rubber (Item 10) to the Light Bar Wind Fairing (Item 1). Using the notched section as a guide, trim if needed.

Secure the Light Bar Wind Fairing assembly to the rack assembly, using M6x16 Flange Button Heads (Item 6) and fully tighten.

3 FINISH

Congratulations! You did it. Take a step back and admire your work!

4 INSTALL OTHER VEHICLE AND RACK ACCESSORIES

Now's the time to visit your favorite Front Runner Dealer in person or online.

Be sure to tag us. We love to see our gear in action! #FrontRunnerOutfitters #BornToRoam

Share your adventures on:

© 2023 FRONT RUNNER VEHICLE OUTFITTERS