FRONT RUNNER RACK LADDER SIDE MOUNT BRACKET

ENG

RRAC269

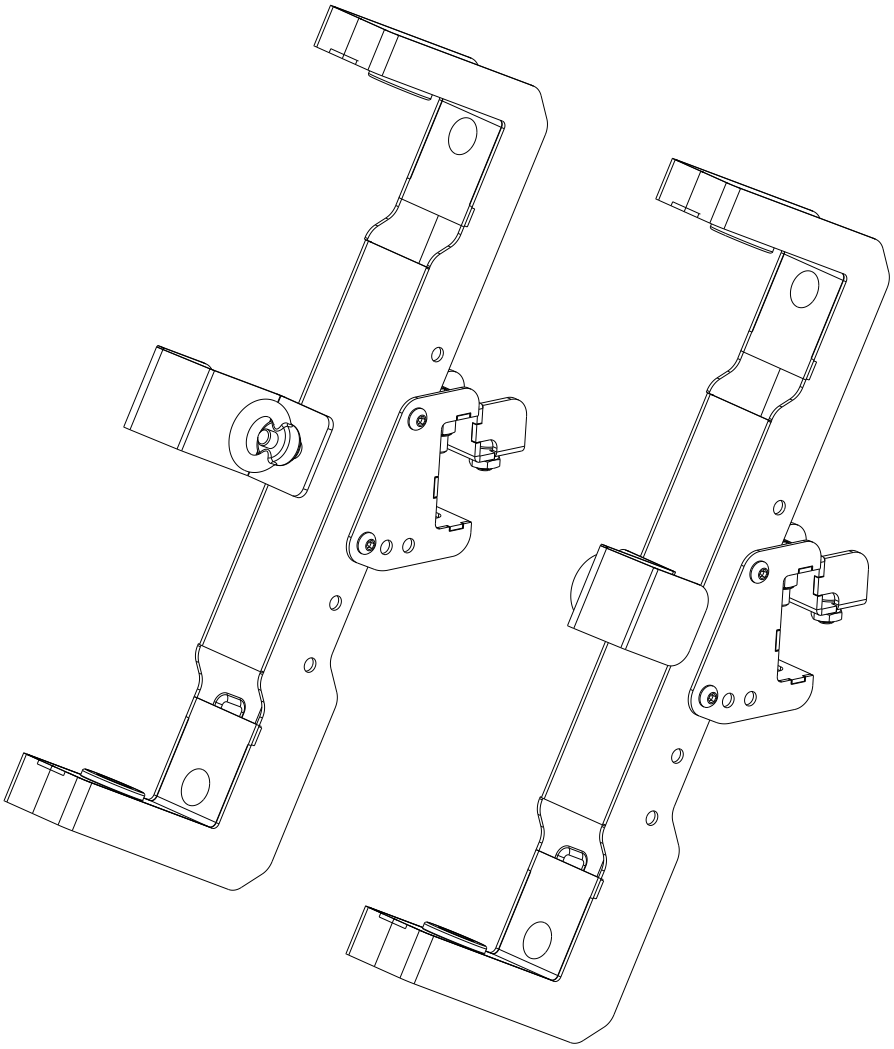

READ ME !

Thank you for purchasing a Front Runner Rack Ladder Side Mount Bracket.

Before you start, take a moment to familiarize yourself with the Fitting Instructions and the included components.

Refer to Page 2 for a list of all the components, quantities and tools required.

IMPORTANT WARNING!

IT IS CRITICAL THAT ALL FRONT RUNNER PRODUCTS BE PROPERLY AND SECURELY ASSEMBLED AND ATTACHED TO YOUR VEHICLE. IMPROPER ATTACHMENT COULD RESULT IN AN AUTOMOBILE ACCIDENT, AND COULD CAUSE SERIOUS BODILY INJURY OR DEATH. YOU ARE RESPONSIBLE FOR ASSEMBLING AND SECURING ALL FRONT RUNNER PRODUCTS TO YOUR VEHICLE, CHECKING THE ATTACHMENTS PRIOR TO USE, AND PERIODICALLY INSPECTING THE PRODUCTS FOR ADJUSTMENT, WEAR AND DAMAGE. THEREFORE, YOU MUST READ AND UNDERSTAND ALL OF THE INSTRUCTIONS AND PRECAUTIONS SUPPLIED WITH YOUR FRONT RUNNER PRODUCT PRIOR TO INSTALLATION OR USE. IF YOU DO NOT UNDERSTAND ALL OF THE INSTRUCTIONS AND CAUTIONS, OR IF YOU HAVE NO MECHANICAL EXPERIENCE AND ARE NOT THOROUGHLY FAMILIAR WITH THE INSTALLATION PROCEDURES, YOU SHOULD HAVE THE PRODUCT INSTALLED BY A PROFESSIONAL INSTALLER OR OTHER QUALIFIED PERSONNEL.

NOTE: Front Runner will not be responsible for any damage caused by the failure to install the product according to these instructions.

Please call us if you have any questions about the installation of this product.

 © 2022 FRONT RUNNER VEHICLE OUTFITTERS

1 GET ORGANIZED

IN THE BOX

1	2 X	Holder
2	2 X	Rack Mount
3	2 X	Support
4	2 X	Clamp
5	2 X	M8 Eye Nut
6	2 X	M8 Nylon Washer
7	6 X	M8 Nyloc Nut
8	8 X	M6 Nyloc Nut
9	8 X	M6 Nut Cap
10	8 X	M6 Nylon Washer
11	2 X	M8 x 35 Hex Bolt
12	8 X	M6 x 16 Button Head Bolts
13	4 X	M8 x 25 Button Head Bolt
14	2 X	M8 x 12 Button Head Bolt
15	2 X	M8 Thin Nut

TOOLS NEEDED

4mm
5mm

10mm
13mm

FIGURE 1.1

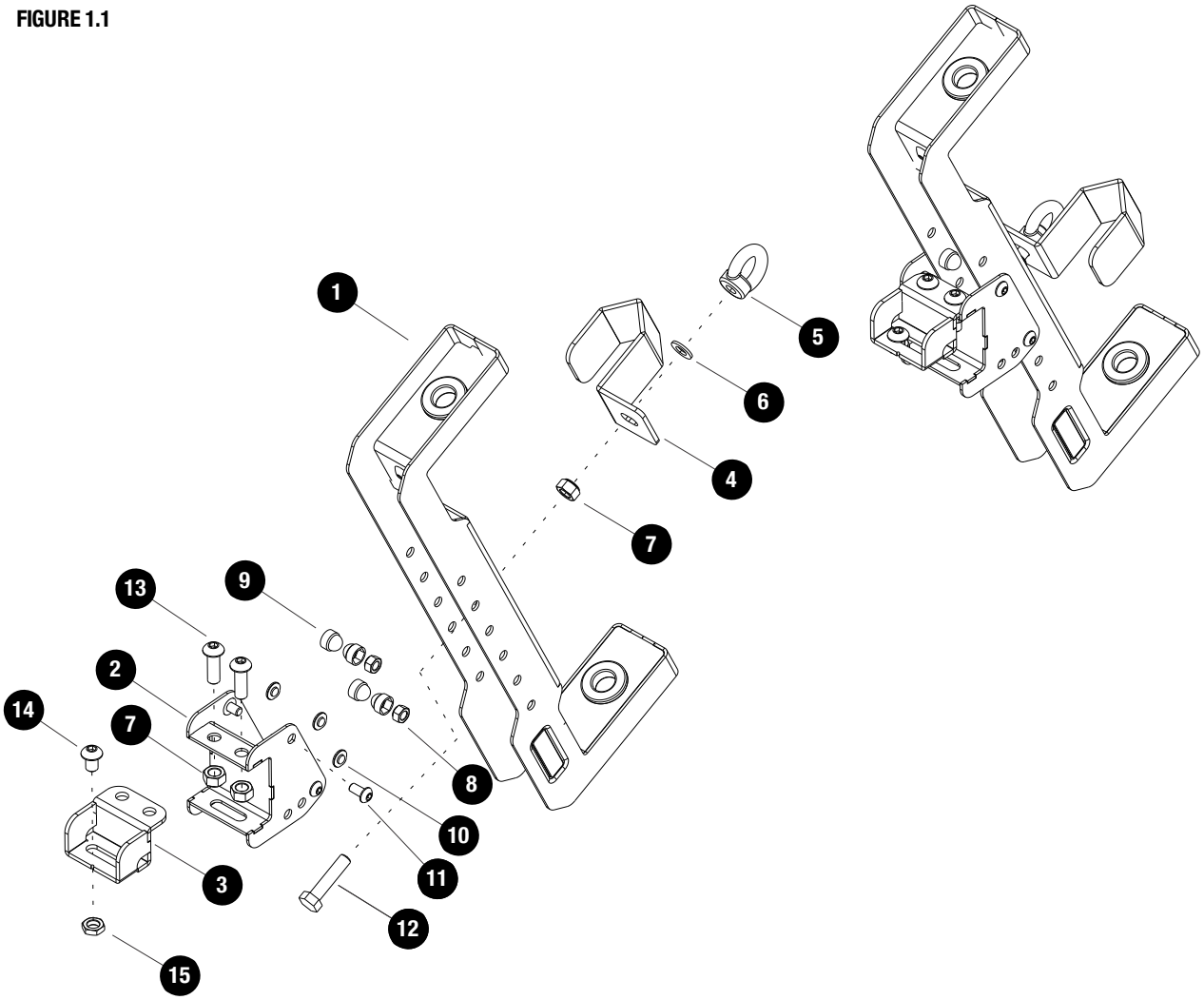

 © 2022 FRONT RUNNER VEHICLE OUTFITTERS

2 FIT AND SECURE

2.1

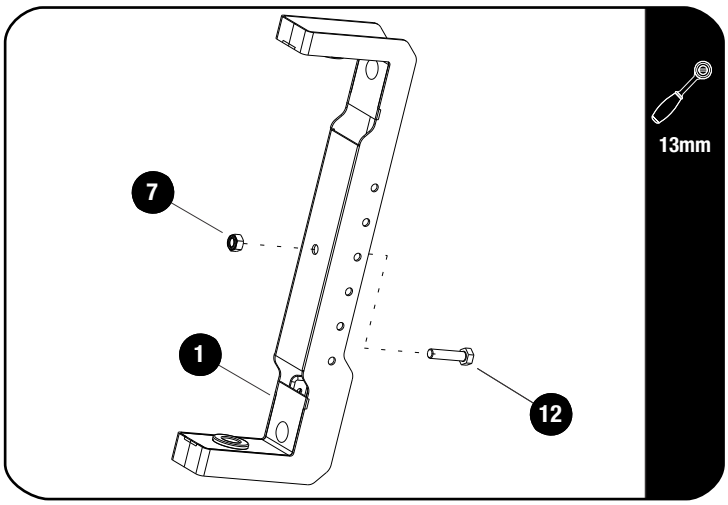

Secure M8 x 35 Hex Bolts (Item 12) to each of the Holders (Item1) using M8 Nyloc Nuts (Item 7) as shown.

Loremipsum

2.2

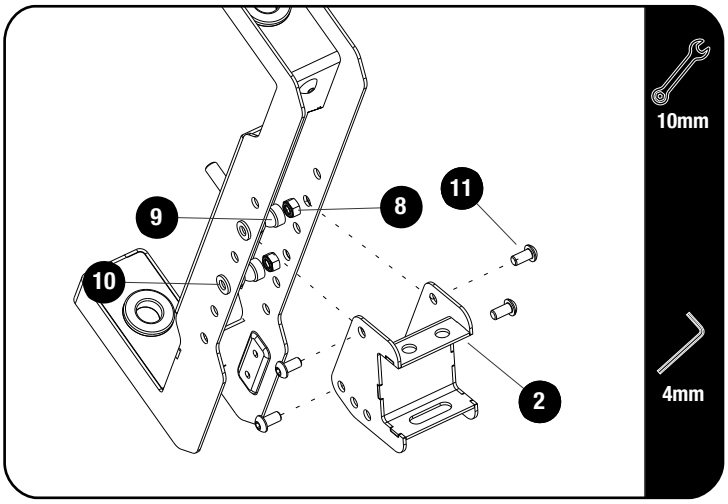

Assemble the Rack Mount (Item 2) To the Holder (Item 1) using M6 x 16 Button Head Bolts, M6 Nylon Washers and M6 Nyloc Nuts (Items 8, 10 & 11).

Place M6 Nut Caps (Item 9) on the the Nyloc Nuts.

2.3

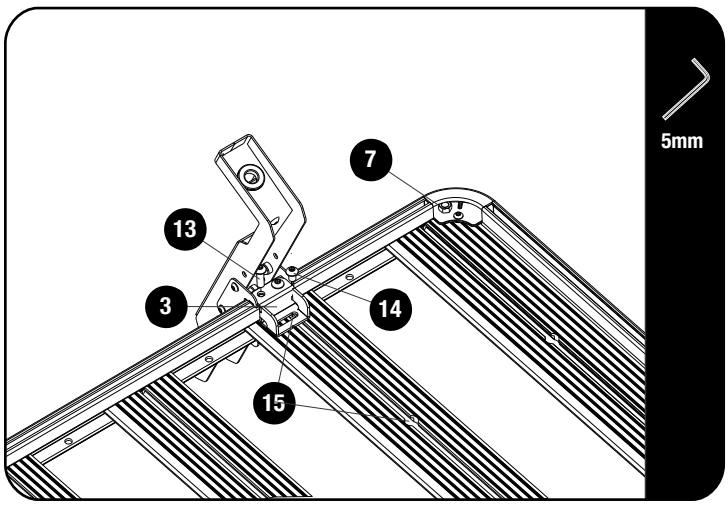

Choose a suitable location for the ladder. See 2.4 for positioning. Leave 2 slats open between the two Holder assemblies.

Loosely assemble the Holder assemblies together with the Support Brackets (Item 3) to the side profile and two slats using M8 x 25, Button Head Bolts, M8 x 12 Button Head Bolts, M8 Thin Nuts and M8 Nyloc Nuts (Items 7, 13, 14 & 15).

Tip: Insert the Nyloc Nut behind the rack corner and slide it into the side profile.

Insert the M8 Thin Nuts into the machined slot of the slat.

© 2022 FRONT RUNNER VEHICLE OUTFITTERS

2 FIT AND SECURE

2.4

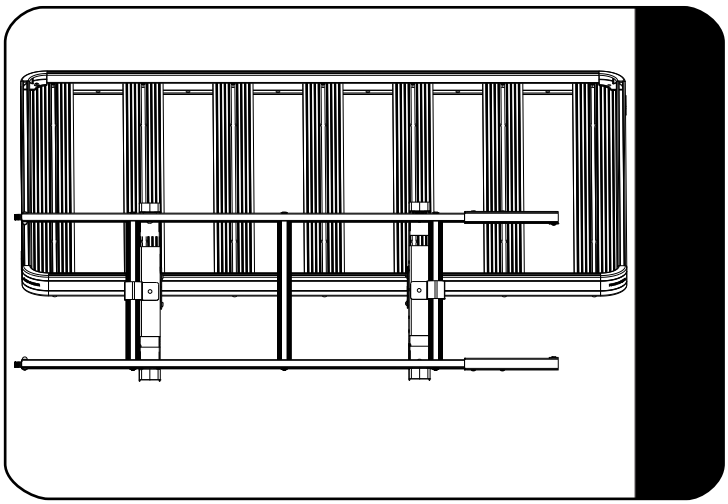

Add Text

2.5

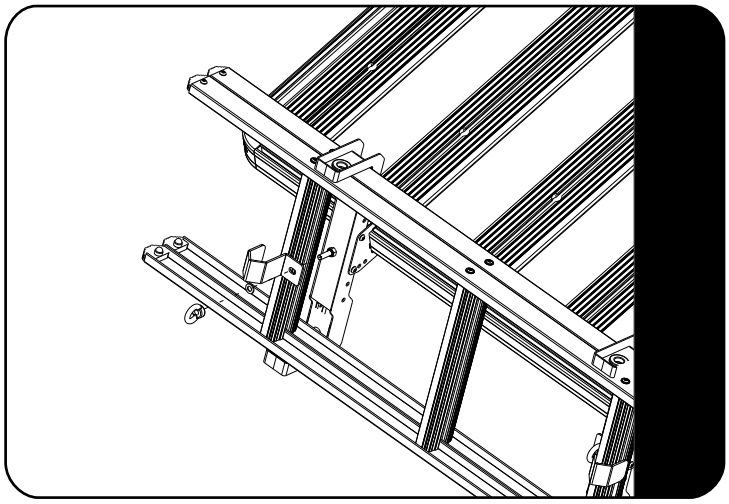

Add Text

3 FINISH

Congratulations! You did it. Take a step back and admire your work!

4 INSTALL OTHER VEHICLE AND RACK ACCESSORIES

Now's the time to visit your favorite Front Runner Dealer in person or online.

Be sure to tag us. We love to see our gear in action! #FrontRunnerOutfitters #BornToRoam

Share your adventures on:

© 2022 FRONT RUNNER VEHICLE OUTFITTERS