FRONT RUNNER

KAYAK CRADLE BRACKETS

ENG

RRAC254

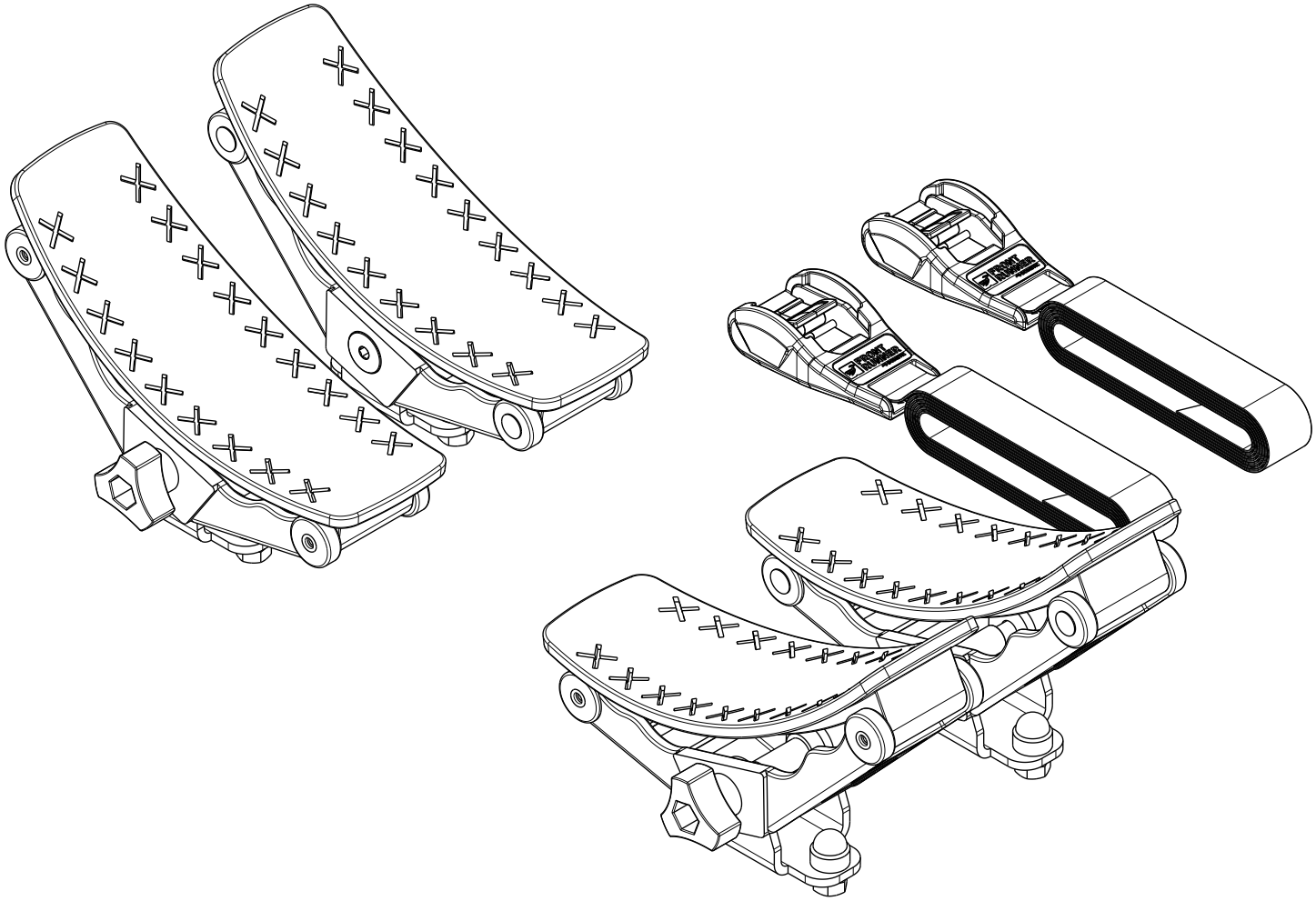

READ ME !

Thank you for purchasing a Front Runner Kayak Cradle Brackets.

Before you start, take a moment to familiarize yourself with the Fitting Instructions and the included components.

Refer to Page 2 for a list of all the components, quantities and tools required.

IMPORTANT WARNING!

IT IS CRITICAL THAT ALL FRONT RUNNER PRODUCTS BE PROPERLY AND SECURELY ASSEMBLED AND ATTACHED TO YOUR VEHICLE. IMPROPER ATTACHMENT COULD RESULT IN AN AUTOMOBILE ACCIDENT, AND COULD CAUSE SERIOUS BODILY INJURY OR DEATH. YOU ARE RESPONSIBLE FOR ASSEMBLING AND SECURING ALL FRONT RUNNER PRODUCTS TO YOUR VEHICLE, CHECKING THE ATTACHMENTS PRIOR TO USE, AND PERIODICALLY INSPECTING THE PRODUCTS FOR ADJUSTMENT, WEAR AND DAMAGE. THEREFORE, YOU MUST READ AND UNDERSTAND ALL OF THE INSTRUCTIONS AND PRECAUTIONS SUPPLIED WITH YOUR FRONT RUNNER PRODUCT PRIOR TO INSTALLATION OR USE. IF YOU DO NOT UNDERSTAND ALL OF THE INSTRUCTIONS AND CAUTIONS, OR IF YOU HAVE NO MECHANICAL EXPERIENCE AND ARE NOT THOROUGHLY FAMILIAR WITH THE INSTALLATION PROCEDURES, YOU SHOULD HAVE THE PRODUCT INSTALLED BY A PROFESSIONAL INSTALLER OR OTHER QUALIFIED PERSONNEL.

NOTE: Front Runner will not be responsible for any damage caused by the failure to install the product according to these instructions.

Please call us if you have any questions about the installation of this product.

 © 2022 FRONT RUNNER VEHICLE OUTFITTERS

1 GET ORGANIZED

IN THE BOX

1	2 X	Kayak Bracket
2	2 X	Tie Down Strap
3	2 X	M8 x 20 Hex Head Bolt
4	2 X	M8 Nyloc Nut
5	2 X	M8 Nut Cap

TOOLS NEEDED

13mm

Torque Wrench

FIGURE 1.1

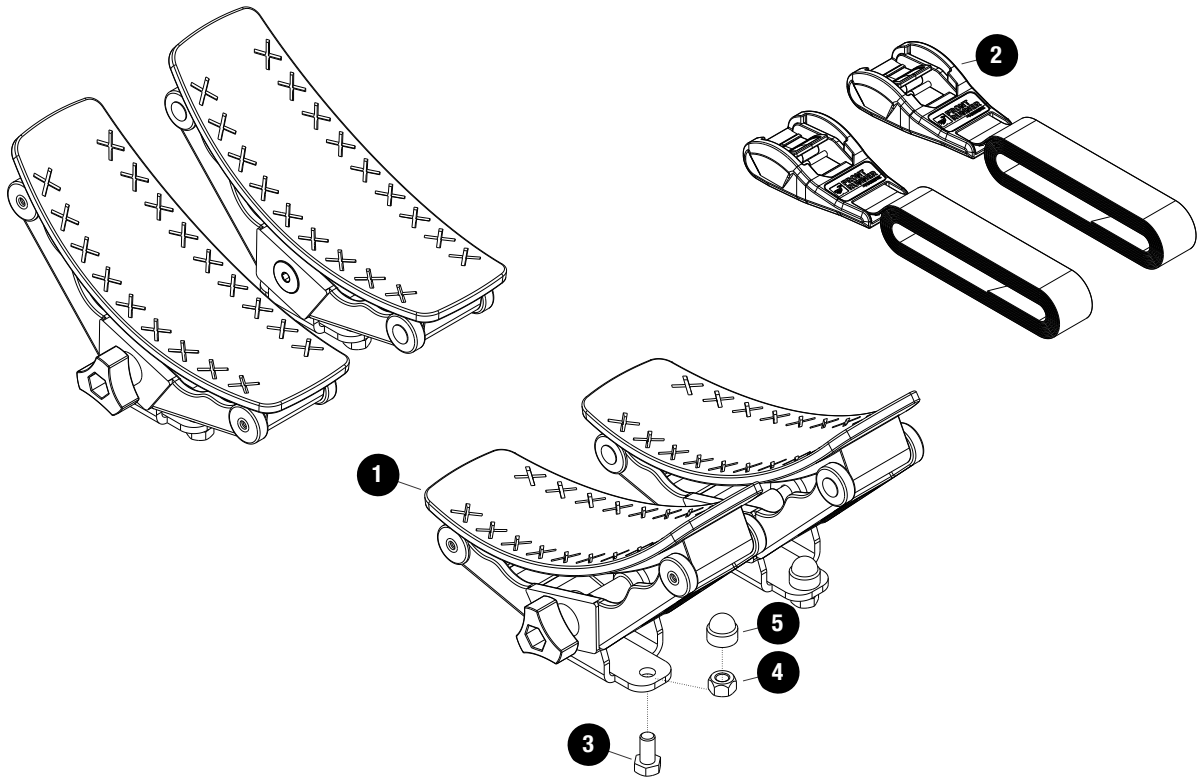

 © 2022 FRONT RUNNER VEHICLE OUTFITTERS

2 FIT AND SECURE

2.1

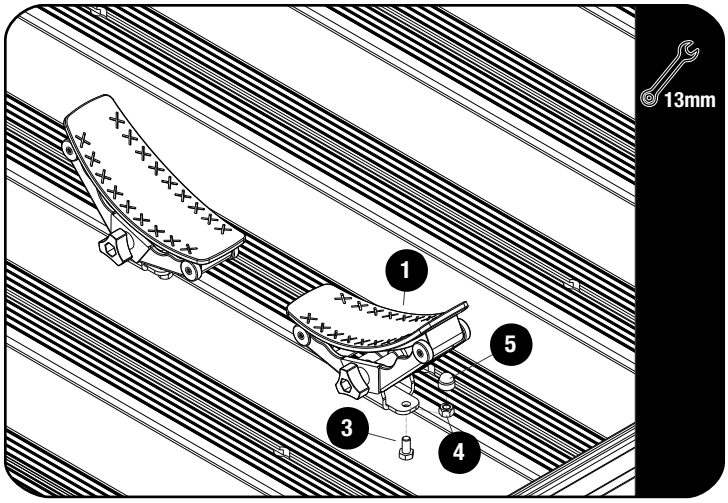

Decide where on your roof rack you would like to place the Kayak Cradle Brackets (Item 1). Work out the correct spacing between the two carriers according to the length of the kayak you are carrying.

Slide four M8 x 20 Hex Head Bolts (Item 3) into the machined slot of each of the two chosen slats. Place the Kayak Brackets (Item 1) over the Hex Head Bolts and loosly assemble them using the M8 x 20 Hex Head Bolts and M8 Nyloc Nuts (Items 3 & 4).

Position the Kayak Brackets left to right as required and Fully tighten.

Tightening Torque:

M8 : 15-20Nm / 11.06 ft lb - 14.75 ft lb

Place M8 Nut Caps (Item 5) over all Nyloc Nuts.

2.2

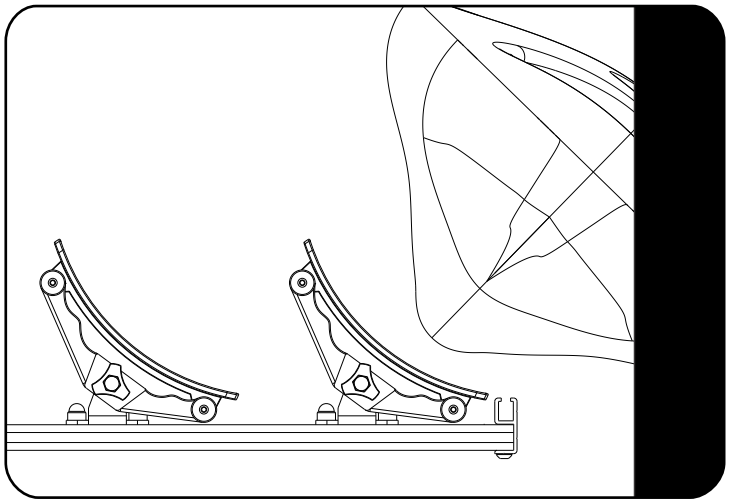

Load the Kayak onto the Kayak Brackets (Item 1).

2.3

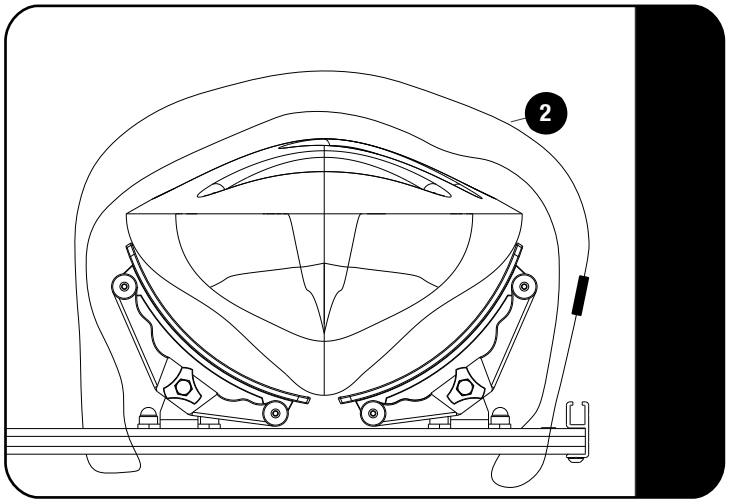

Secure the Kayak / Canoe using the Tie Down Straps supplied (Item 2) by looping them around the roof racks slats.

© 2022 FRONT RUNNER VEHICLE OUTFITTERS

3

FINISH

Congratulations! You did it. Take a step back and admire your work!

4

INSTALL OTHER VEHICLE AND RACK ACCESSORIES

Now's the time to visit your favorite Front Runner Dealer in person or online.

Be sure to tag us. We love to see our gear in action! #FrontRunnerOutfitters #BornToRoam

Share your adventures on:

© 2022 FRONT RUNNER VEHICLE OUTFITTERS