FRONT RUNNER PRO WATER TANK FLAT MOUNT BRACKET

ENG

RRAC248

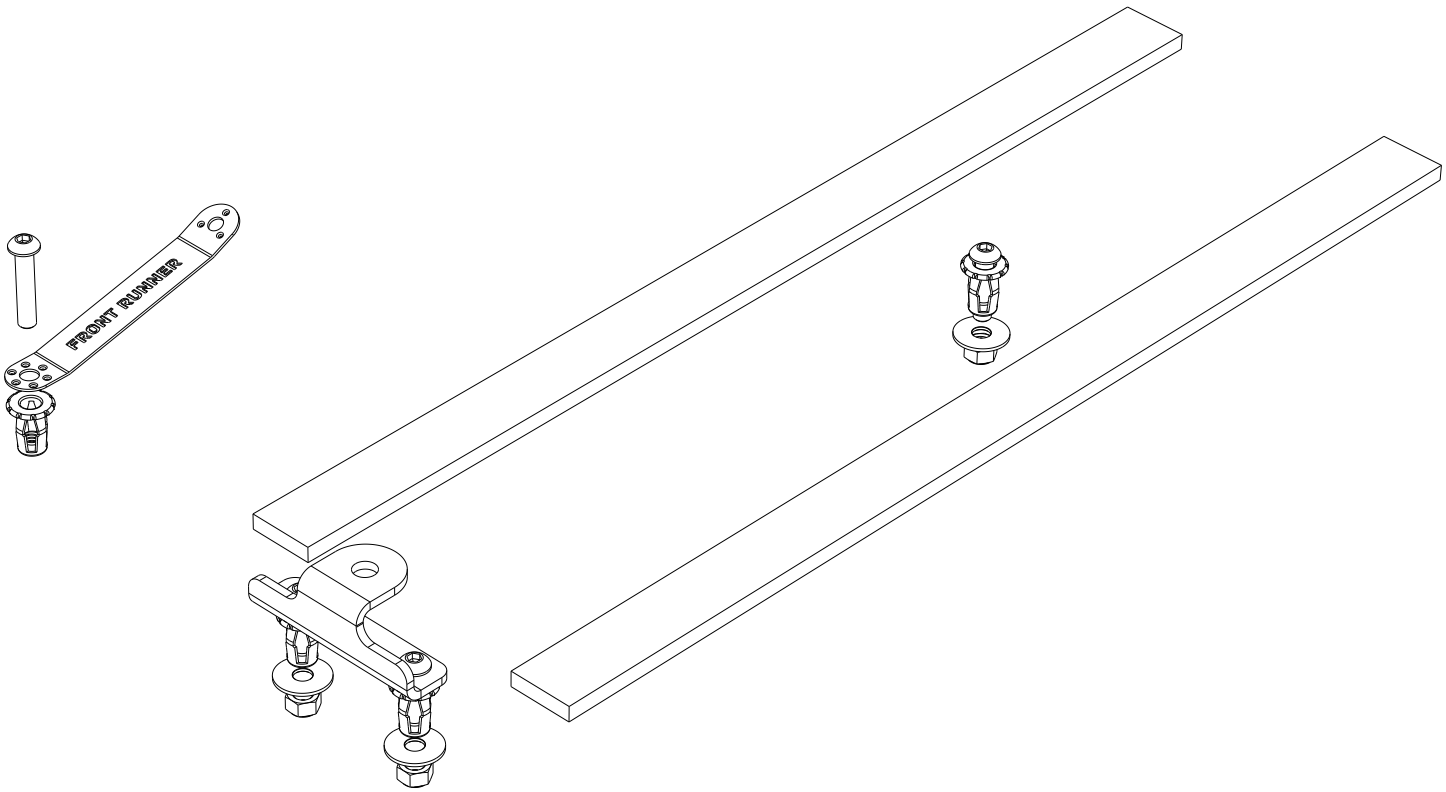

READ ME !

Thank you for purchasing a Front Runner Pro Water Tank Flat Mount Bracket.

Before you start, take a moment to familiarize yourself with the Fitting Instructions and the included components.

Refer to Page 2 for a list of all the components, quantities and tools required.

IMPORTANT WARNING!

IT IS CRITICAL THAT ALL FRONT RUNNER PRODUCTS BE PROPERLY AND SECURELY ASSEMBLED AND ATTACHED TO YOUR VEHICLE. IMPROPER ATTACHMENT COULD RESULT IN AN AUTOMOBILE ACCIDENT, AND COULD CAUSE SERIOUS BODILY INJURY OR DEATH. YOU ARE RESPONSIBLE FOR ASSEMBLING AND SECURING ALL FRONT RUNNER PRODUCTS TO YOUR VEHICLE, CHECKING THE ATTACHMENTS PRIOR TO USE, AND PERIODICALLY INSPECTING THE PRODUCTS FOR ADJUSTMENT, WEAR AND DAMAGE. THEREFORE, YOU MUST READ AND UNDERSTAND ALL OF THE INSTRUCTIONS AND PRECAUTIONS SUPPLIED WITH YOUR FRONT RUNNER PRODUCT PRIOR TO INSTALLATION OR USE. IF YOU DO NOT UNDERSTAND ALL OF THE INSTRUCTIONS AND CAUTIONS, OR IF YOU HAVE NO MECHANICAL EXPERIENCE AND ARE NOT THOROUGHLY FAMILIAR WITH THE INSTALLATION PROCEDURES, YOU SHOULD HAVE THE PRODUCT INSTALLED BY A PROFESSIONAL INSTALLER OR OTHER QUALIFIED PERSONNEL.

NOTE: Front Runner will not be responsible for any damage caused by the failure to install the product according to these instructions.

Please call us if you have any questions about the installation of this product.

 © 2022 FRONT RUNNER VEHICLE OUTFITTERS

1 GET ORGANIZED

IN THE BOX

1	1 X	Mounting Bracket
2	3 X	M6 x 25 Button Head Screw
3	4 X	M6 Jack Nut
4	1 X	Jack Nut Tool
5	3 X	M6 Nyloc Nut
6	3 X	M6 x 19 x 1.2 Flat Washer
7	2 X	PSA Strip PE60 (420mm)
8	1 X	M6 x 30 Button Head Screw

TOOLS NEEDED

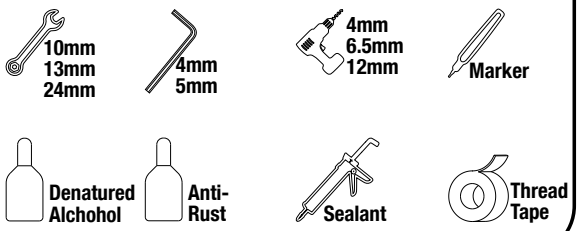

FIGURE 1.1

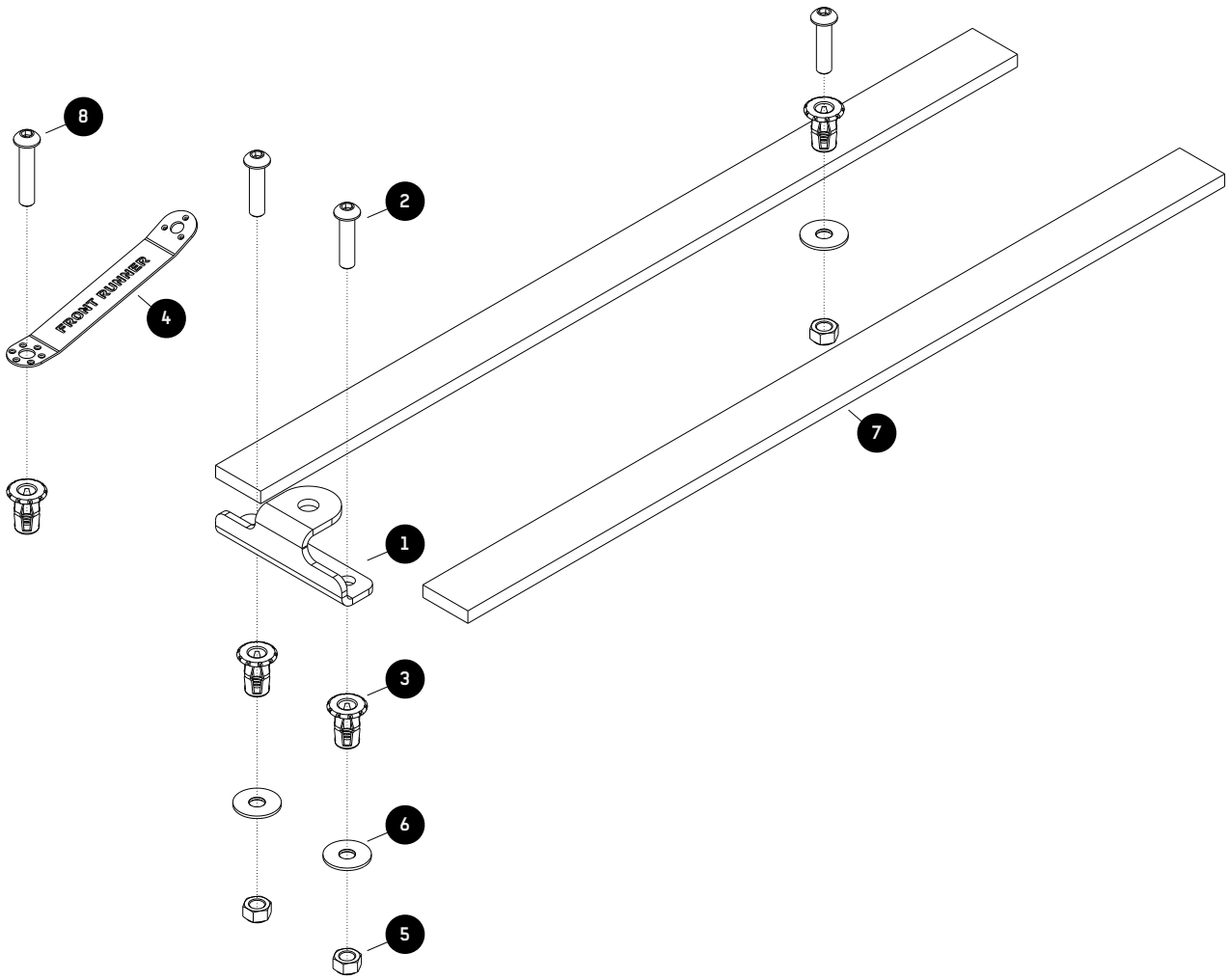

 © 2022 FRONT RUNNER VEHICLE OUTFITTERS

2 FIT AND SECURE

2.1

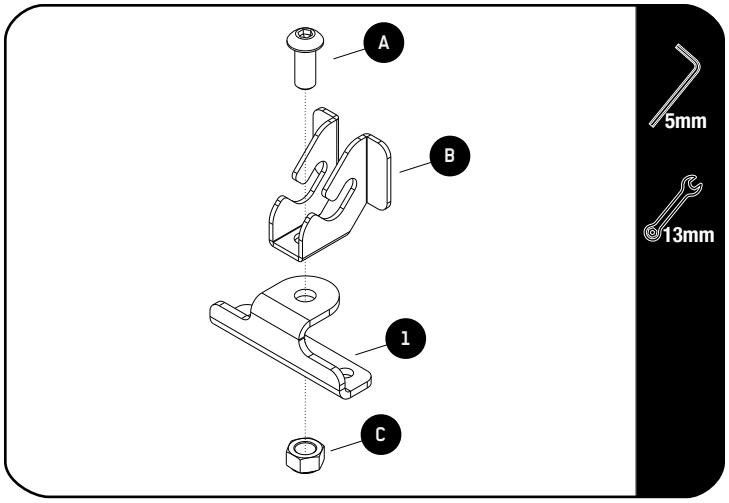

Assemble A, B and C (supplied with RRAC179) to the Mounting Bracket (Item 1).

2.2

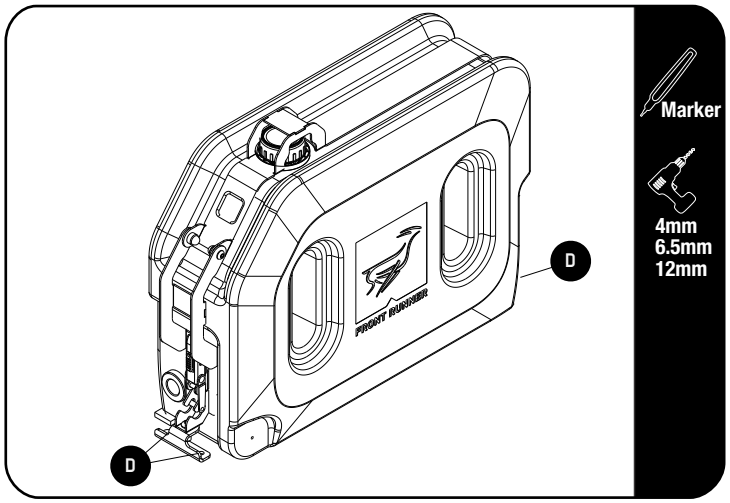

Determine where the Pro Water Tank (Sold Seperately) will be Mounted. Loosly fit the Pro Tank Strap (Sold Seperately) and Pro Water Tank (Sold Seperately) to the Mounting Bracket (Item 1).

Mark holes (D) as shown.

Option A

Drill a 4mm Pilot hole and open to 6.5mm if you want to Secure the Mounting Bracket using M6 x 25 Button Head Bolt, M6 x 19 x 1.2 Flat Washer and M6 Nyloc Nuts (Items 2, 5 & 6).

Option B

Drill a 4mm Pilot hole and open to 12mm if you want to Secure the Mounting Bracket using M6 x 25 Button Head Bolts and M6 Jack Nuts (Items 2 & 3). Apply anti-rust before 2.3.

2.3

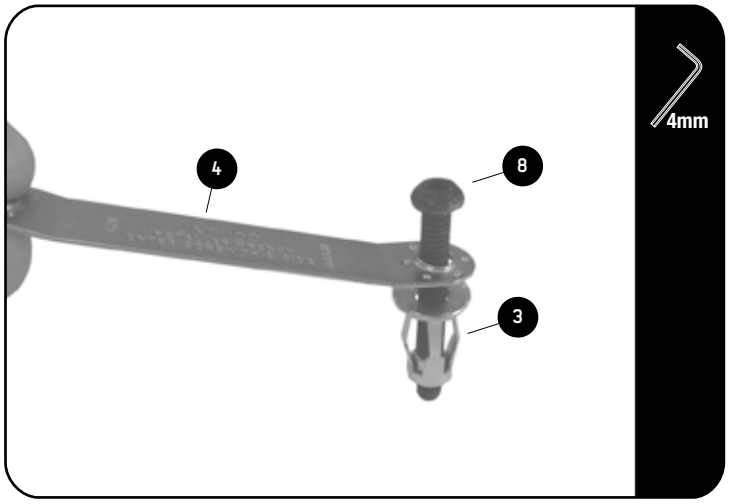

Only Proceed with this step when using mounting option B.

Insert an M6 x 30 Button Head Bolt (Item 8) into the side of the Jack Nut Tool (Item 4). Loosely fit a jack nut (Item 3) to the button head bolt as shown.

Insert the Jack Nut (Item 3) into the 12mm hole.

Using a cordless driver and a 4mm allen cordless bit, set the jack nut into the hole while holding onto the handle of the Jack Nut Tool (Item 4).

Repeat for the other holes.

© 2022 FRONT RUNNER VEHICLE OUTFITTERS

2 FIT AND SECURE

2.4

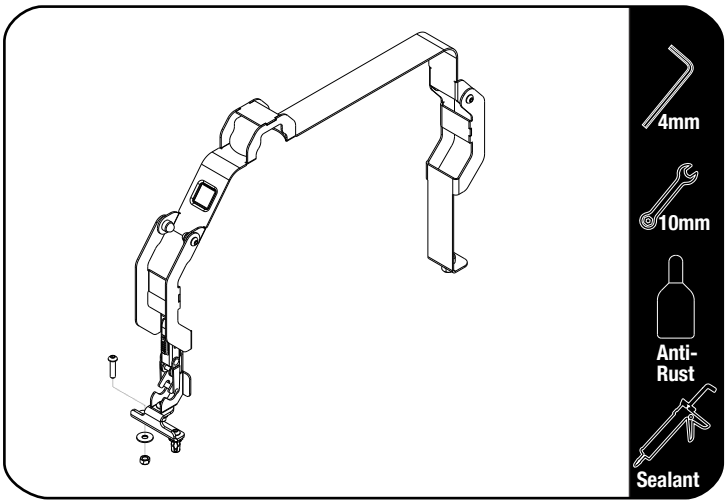

Apply anti-rust around all the holes. Place some silicone around each hole.

Option A

Secure the Pro Tank Strap (Sold Seperately) and the Mounting Bracket (Item 1) using M6 x 25 Button Head Bolt, M6 x 19 x 1.2 Flat Washers and M6 Nyloc Nuts (Items 2, 5 & 6).

Option B

Secure the Pro Tank Strap (Sold Seperately) and the Mounting Bracket (Item 1) using M6 x 25 Button Head Bolts (Item 2).

2.5

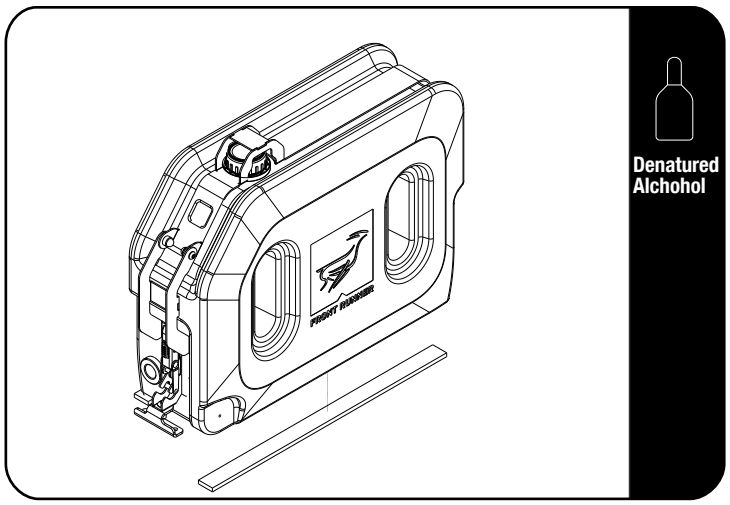

Place the PSA Strips (Item 7) below the Pro Water Tank as shown in 2.5.

Clean the area using a rag and denatured alcohol.

Remove the Backing and stick The PSA Strips (Item 7) to the position identified earlier.

2.6

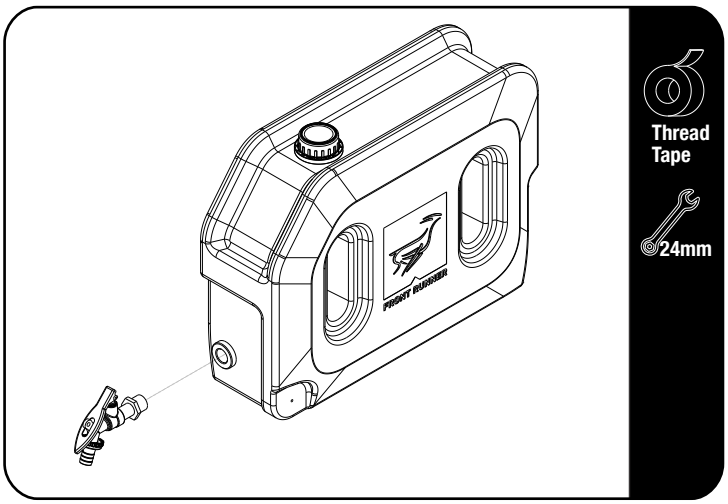

If you are fitting the tap apply thread tape to the thread of the tap.

This will allow the Tap to be aligned to your chosen position and have a water tight seal.

Sold Seperately

Tap - WTAN059
Pro Water Tank / 42L - WTAN062
Pro Tak Strap - RRAC179

© 2022 FRONT RUNNER VEHICLE OUTFITTERS

3 FINISH

Congratulations! You did it. Take a step back and admire your work!

4 INSTALL OTHER VEHICLE AND RACK ACCESSORIES

Now's the time to visit your favorite Front Runner Dealer in person or online.

Be sure to tag us. We love to see our gear in action! #FrontRunnerOutfitters #BornToRoam

Share your adventures on:

© 2022 FRONT RUNNER VEHICLE OUTFITTERS