START HERE!

READ ME FIRST

Don't be a hero and muscle through this installation without reading these fitting instructions first! Improper installation of this gear may void certain aspects of your warranty.

Before you begin, take a moment and open all your Front Runner rack kit boxes and gather the assembly instructions for the various components.

A complete kit will contain:

1. A Front Runner Mounting System specific to your vehicle
2. A Front Runner Rack Tray or Load Bar Slats

This document will guide you through the assembly of the mounting system and assist you in fitting the roof rack tray or load bars to your specific vehicle.

Please refer to the next page for a list of all the components, quantities and tools required.

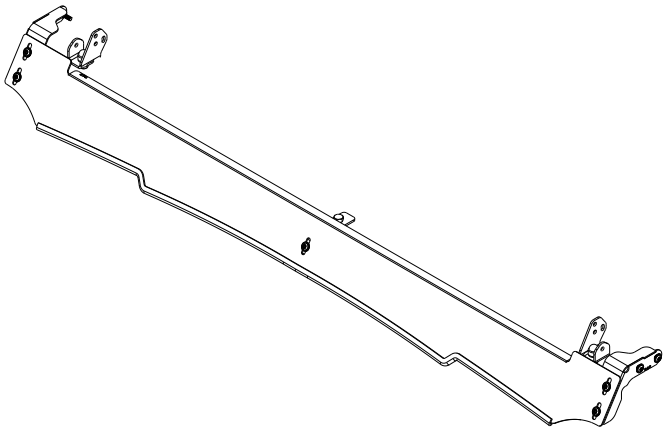

IMPORTANT WARNING! ⚠

IT IS CRITICAL THAT ALL FRONT RUNNER PRODUCTS BE PROPERLY AND SECURELY ASSEMBLED AND ATTACHED TO YOUR VEHICLE. IMPROPER ATTACHMENT COULD RESULT IN AN AUTOMOBILE ACCIDENT, AND COULD CAUSE SERIOUS BODILY INJURY OR DEATH. YOU ARE RESPONSIBLE FOR ASSEMBLING AND SECURING ALL FRONT RUNNER PRODUCTS TO YOUR VEHICLE, CHECKING THE ATTACHMENTS PRIOR TO USE, AND PERIODICALLY INSPECTING THE PRODUCTS FOR ADJUSTMENT, WEAR AND DAMAGE. THEREFORE, YOU MUST READ AND UNDERSTAND ALL OF THE INSTRUCTIONS AND PRECAUTIONS SUPPLIED WITH YOUR FRONT RUNNER PRODUCT PRIOR TO INSTALLATION OR USE. IF YOU DO NOT UNDERSTAND ALL OF THE INSTRUCTIONS AND CAUTIONS, OR IF YOU HAVE NO MECHANICAL EXPERIENCE AND ARE NOT THOROUGHLY FAMILIAR WITH THE INSTALLATION PROCEDURES, YOU SHOULD HAVE THE PRODUCT INSTALLED BY A PROFESSIONAL INSTALLER OR OTHER QUALIFIED PERSONNEL.

NOTE: Front Runner will not be responsible for any damage caused by the failure to install the product according to these instructions.

Please call us if you have any questions about the installation of this product.

 © 2023 FRONT RUNNER VEHICLE OUTFITTERS

1 GET ORGANIZED

IN THE BOX

1	1 X	Light Bar Wind Fairing
2	1 X	Wind Fairing Support outer LHS
3	1 X	Wind Fairing Support Center
4	1 X	Wind Fairing Support Outer RHS
5	1 X	Light Bar Bracket LHS
6	1 X	Light Bar Bracket RHS
7	2 X	Light Bar Bracket 01
8	9 X	M6 x 16 Button Head Flange Bolt
9	3 X	M8 x 16 x 1.6 Flat Washer
10	3 X	M8 Nyloc Nut
11	3 X	M8 x 20 Hex Bolt
12	3 X	M8 Nut Cap
13	1 X	Wind Fairing Rubber (1050mm LONG)

TOOLS NEEDED

Torx T30

Cordless Driver

13mm

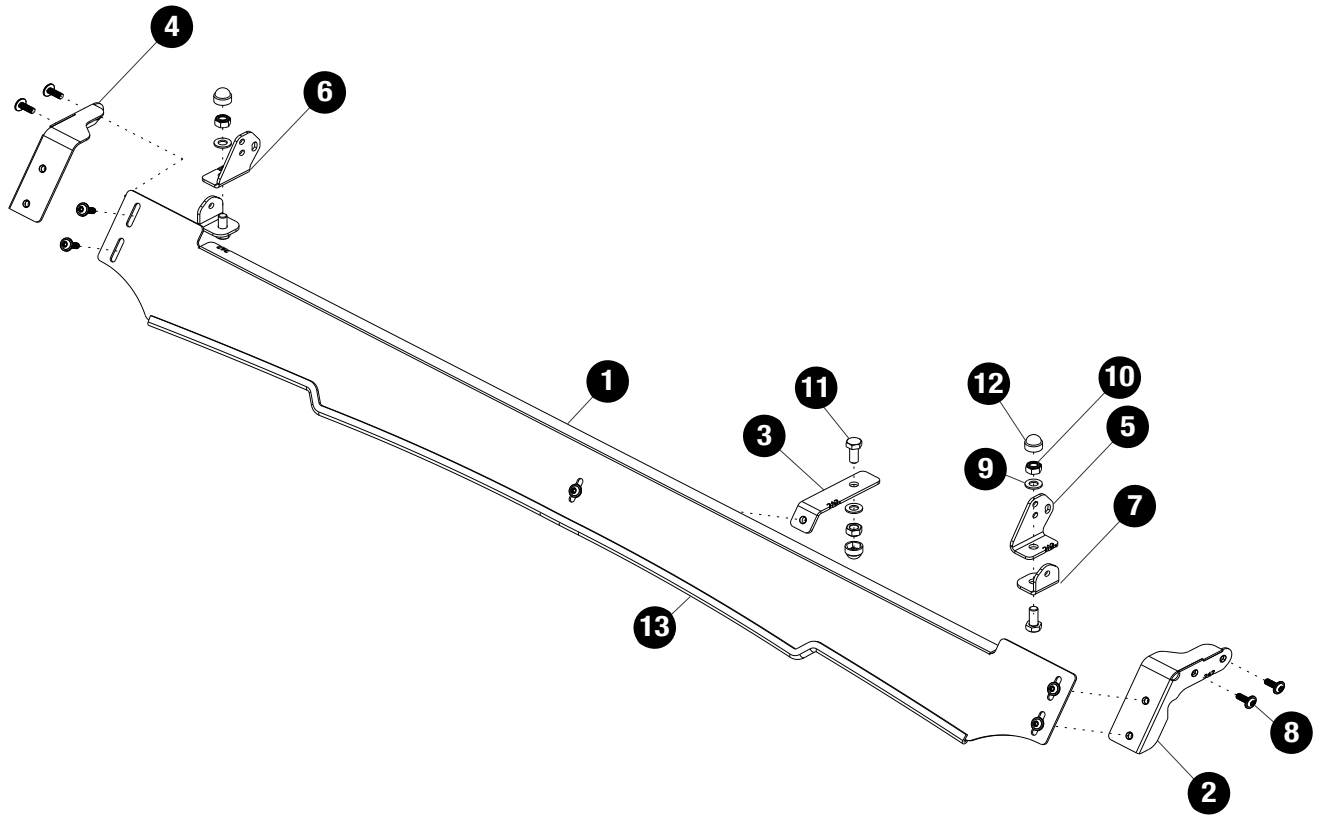

© 2023 FRONT RUNNER VEHICLE OUTFITTERS

2 FIT AND SECURE

2.1

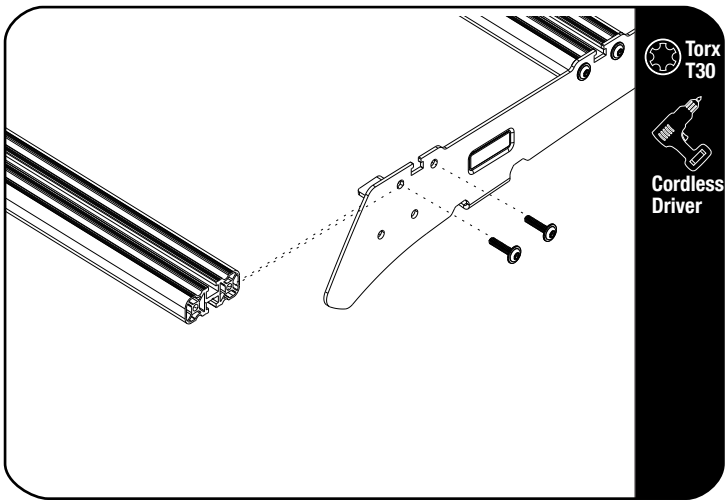

Loosen and remove the front slat.

Keep screws to one side to use later.

2.2

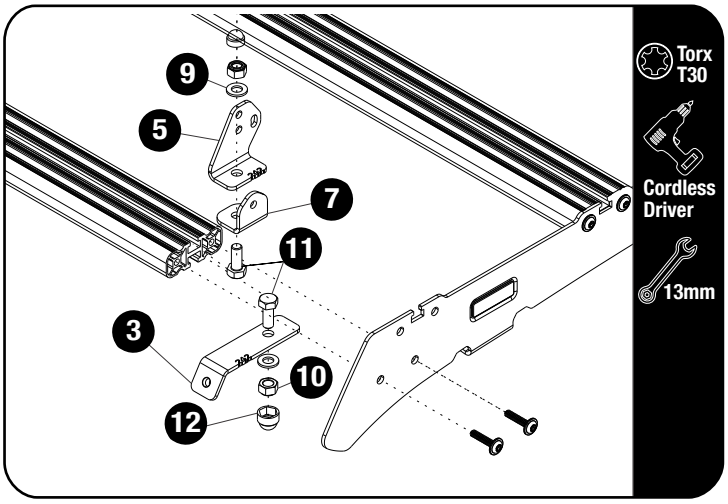

Slide The M8 x 20 Hex Bolt (Item 11) in the the Slat that was removed in 2.1 at the bottom and the top as shown.

Place the Wind Fairing Center support Bracket (Item 3) on the M8 x 20 Hex Bolt (Item 11) at the bottom of the Slat together with the M8 Flat Washer, M8 Nyloc Nut and M8 Nut Cap (Item 9, 10 & 12)

Centralize the Support Bracket and tighten the M8 Nyloc nut and place the M8 Nut Cap on the Nyloc nut.

Assemble the Light Bar Bracket L/H & R/H (Item 5 & 7) on to the M8 x 20 Hex bolt (Item 11) together with the M8 Flat washer, M8 Nyloc Nut and M8 Nut Cap (Item 9, 10 & 12)

Refit The Front Salt that Was Removed into the lower holes of the Foot Rail As Shown.

2.3

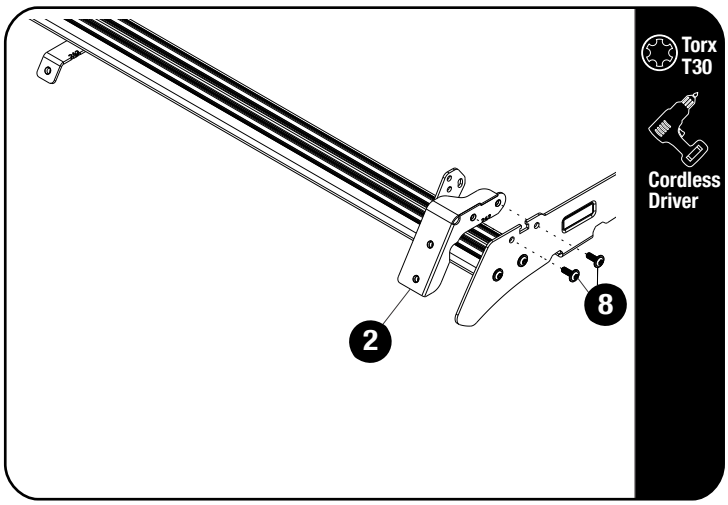

Assemble the Wind Fairing Outer Support Bracket on the L/H and R/H (Item 2 & 4)side as shown with the M6 Button Head Flange Bolts (Item 8).

Slide The Light Bar Brackets to desired position and fully Tighten,

© 2023 FRONT RUNNER VEHICLE OUTFITTERS

2 FIT AND SECURE

2.4

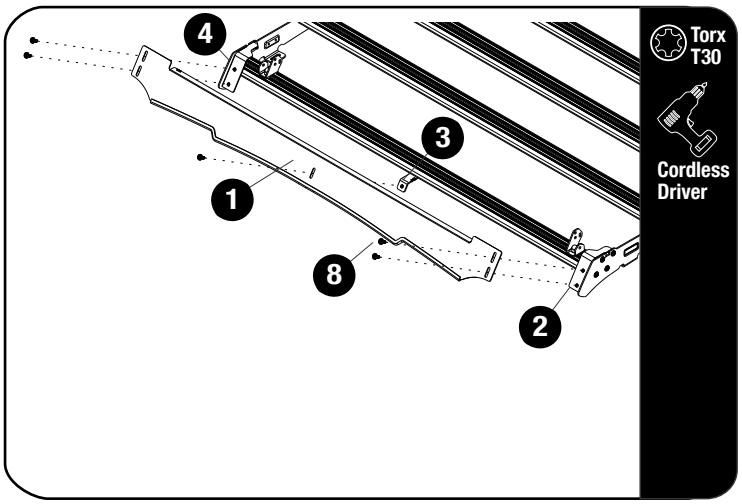

Assemble the Wind Fairing (item 1) The the Wind Fairinf Support Brackets (Item 2, 3 & 4) using the M6 Button Head Flange Bolts (Item 8) as shown.

3 COMPLETION

3.1 Congratulations! You did it. Take a step back and admire your work!

4 INSTALL OTHER VEHICLE AND RACK ACCESSORIES

Now's the time to visit your favorite Front Runner dealer in person or online.

IMPORTANT!

FRONT RUNNER RACK KITS OFTEN HAVE A HIGHER LOAD RATING THAN THE VEHICLES THEY ARE MOUNTED TO. PLEASE REFER TO YOUR SPECIFIC VEHICLE MANUFACTURER FOR A RECOMMENDED ROOF RATING. FRONT RUNNER CANNOT BE RESPONSIBLE FOR IMPROPER LOADING BEYOND THE VEHICLE MANUFACTURER'S STATED LOAD CAPACITY.

Be sure to tag us. We love to see our gear in action! #FrontRunnerOutfitters #BornToRoam

Share your adventures on:

© 2023 FRONT RUNNER VEHICLE OUTFITTERS