FRONT RUNNER

DOMETIC PERFECTWALL AWNING MOUNTING BRACKETS

ENG

RRAC223

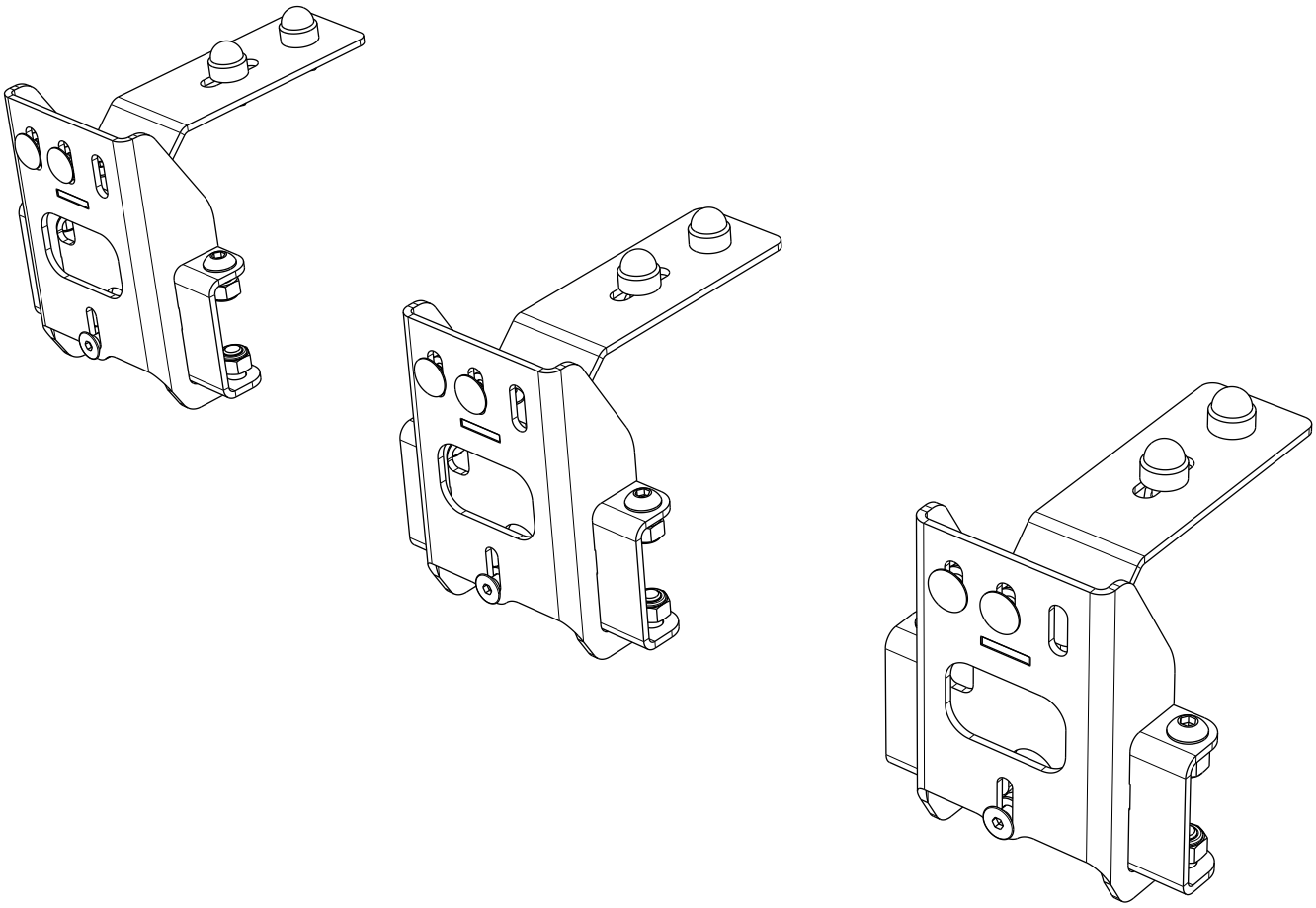

READ ME !

Thank you for purchasing a Dometic Perfectwall Awning Mounting Brackets.

Before you start, take a moment to familiarize yourself with the Fitting Instructions and the included components.

Refer to Page 2 for a list of all the components, quantities and tools required.

IMPORTANT WARNING!

IT IS CRITICAL THAT ALL FRONT RUNNER PRODUCTS BE PROPERLY AND SECURELY ASSEMBLED AND ATTACHED TO YOUR VEHICLE. IMPROPER ATTACHMENT COULD RESULT IN AN AUTOMOBILE ACCIDENT, AND COULD CAUSE SERIOUS BODILY INJURY OR DEATH. YOU ARE RESPONSIBLE FOR ASSEMBLING AND SECURING ALL FRONT RUNNER PRODUCTS TO YOUR VEHICLE, CHECKING THE ATTACHMENTS PRIOR TO USE, AND PERIODICALLY INSPECTING THE PRODUCTS FOR ADJUSTMENT, WEAR AND DAMAGE. THEREFORE, YOU MUST READ AND UNDERSTAND ALL OF THE INSTRUCTIONS AND PRECAUTIONS SUPPLIED WITH YOUR FRONT RUNNER PRODUCT PRIOR TO INSTALLATION OR USE. IF YOU DO NOT UNDERSTAND ALL OF THE INSTRUCTIONS AND CAUTIONS, OR IF YOU HAVE NO MECHANICAL EXPERIENCE AND ARE NOT THOROUGHLY FAMILIAR WITH THE INSTALLATION PROCEDURES, YOU SHOULD HAVE THE PRODUCT INSTALLED BY A PROFESSIONAL INSTALLER OR OTHER QUALIFIED PERSONNEL.

NOTE: Front Runner will not be responsible for any damage caused by the failure to install the product according to these instructions.

Please call us if you have any questions about the installation of this product.

 © 2022 FRONT RUNNER VEHICLE OUTFITTERS

1 GET ORGANIZED

IN THE BOX

1	3 X	Awning Mount
2	3 X	Support Bracket (Van Rack Standard Slat)
3	3 X	Support Bracket (Van Rack Inverted Slat)
4	3 X	Support Bracket (Slimline II Rack)
5	6 X	M8 Nut Cap
6	3 X	M6 x 16 Button Head Bolt
7	6 X	M6 x 20 Carriage Bolt
8	3 X	M6 x 16 Counter Sink Bolt
9	18 X	M8 Nyloc Nut
10	6 X	M8 x 16 Button Head Bolt
11	6 X	M8 x 20 Hex Bolt
12	9 X	M6 Nyloc Nut
13	9 X	M6 x 12 x 1 Flat Washer
14	6 X	M8 x 16 Hex Bolt

TOOLS NEEDED

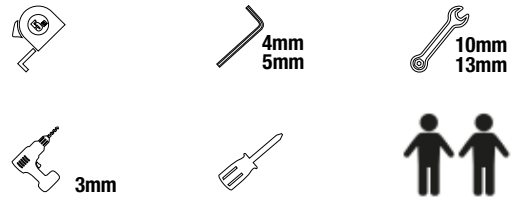

FIGURE 1.1

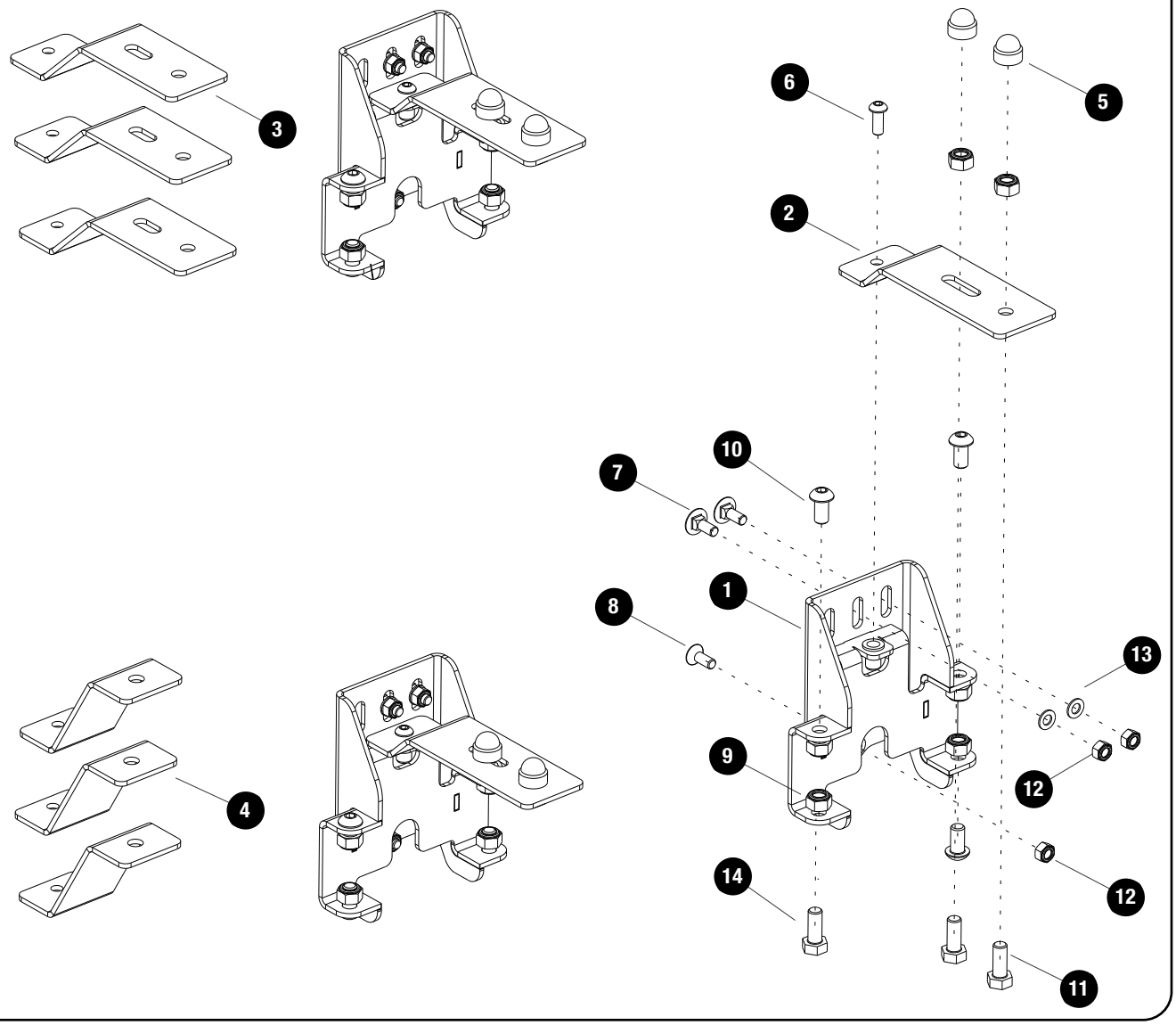

 © 2022 FRONT RUNNER VEHICLE OUTFITTERS

2 FIT AND SECURE

2.1

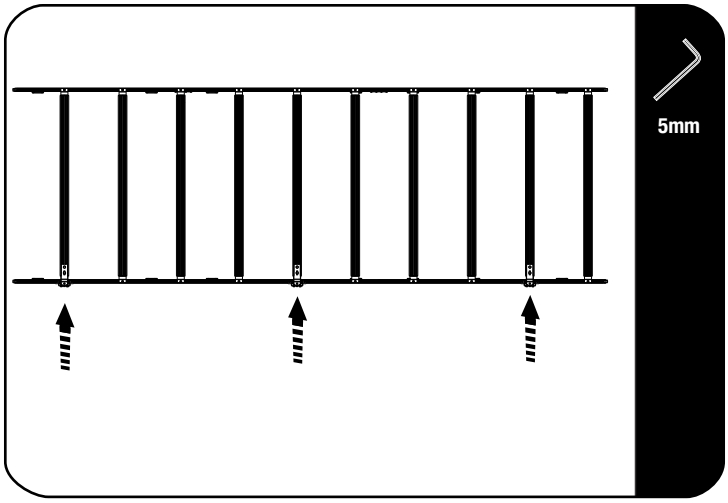

Decide which side of the rack the awning will be fitted too.

The awning need all three brackets fitted, with the two outer onces positioned over the closest slats and the third positioned centrally over the closest slat.

2.2

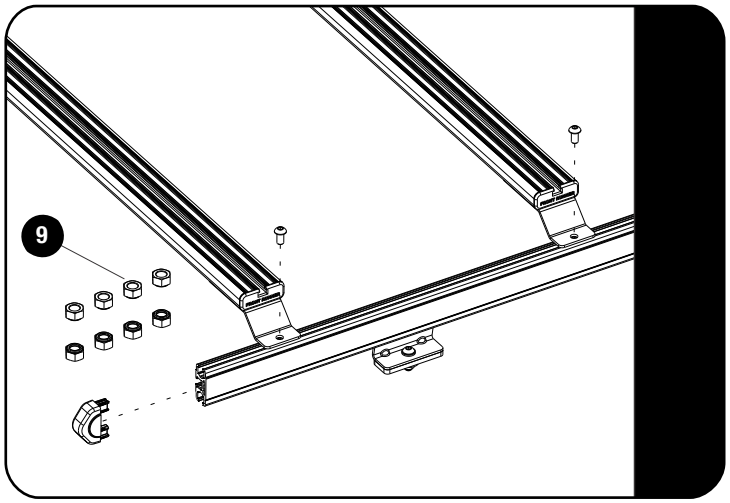

Remove the end caps to insert hardware needed and loosen the two brackets of all the slats on the chosen side.

2.3

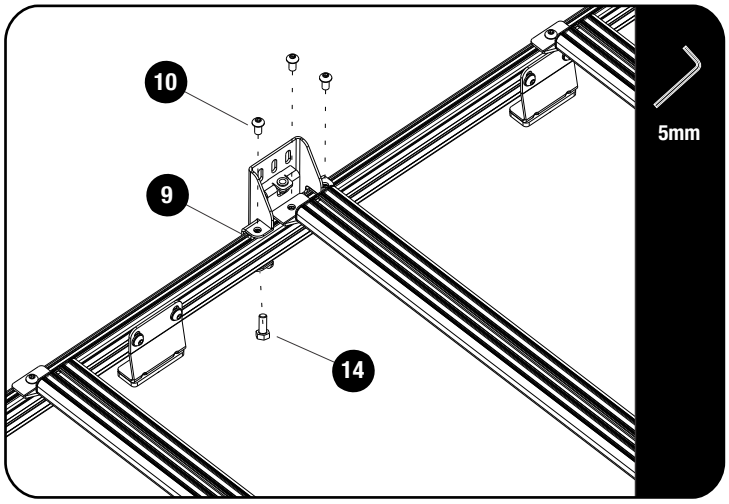

Secure the Awning Mount Brackets using M8 x 16 Button Head Bolts and the M8 Nyloc Nuts (Items 9 & 10) from 2.2.

Refit the slats loosened in 2.1. Ensure that the center of the slat is aligned with the center of the Awning Mount Bracket.

© 2022 FRONT RUNNER VEHICLE OUTFITTERS

2 FIT AND SECURE

2.4

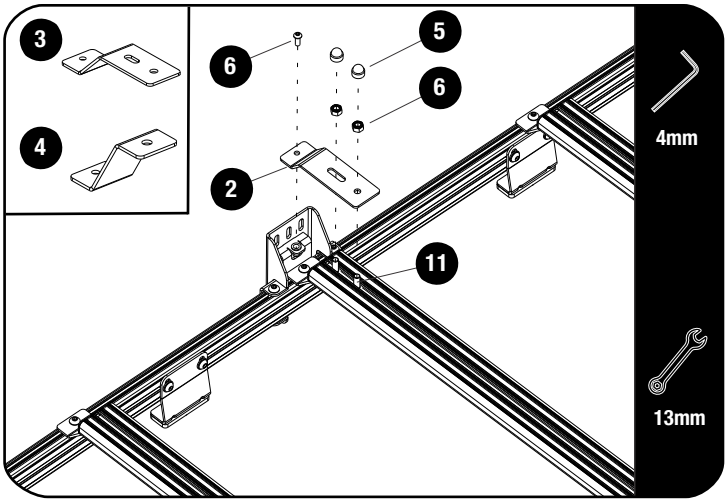

Slide two M8 x 20 Hex Bolts (Item 11) into the slat as shown. Secure the Support Bracket (Item 2) to the Awning Mount Bracket and the slat using M8 Nyloc Nuts and M6 x 16 Button Head Bolt (Items 6 & 9) as shown.

Take note which Support Bracket (Item 2, 3 or 4) to use.

Fully tighten all fasteners.

Place M8 Nut Caps (Item 5) on the Nylon Nuts.

2.5

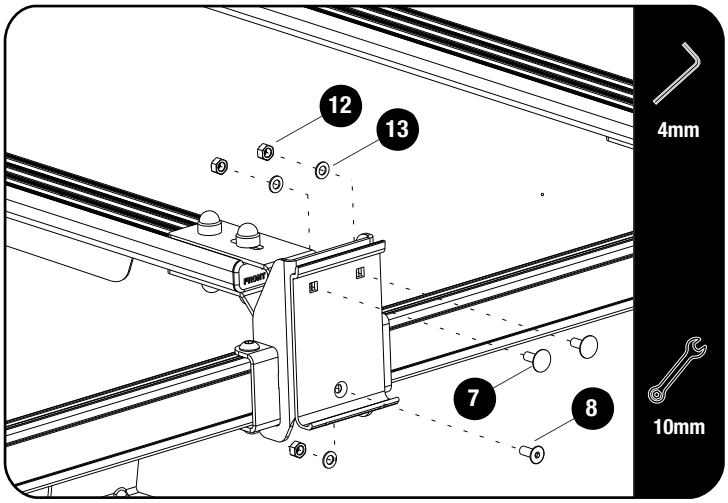

Secure the adapter (supplied with the awning) to the Awning Mount Bracket using M6 x 16 Carrige Bolts, M6 x 16 Counter Sink Bolts, M6 Flat Washers & M6 Nyloc Nuts (Items 7, 8, 12 & 13)

Refer to Dometic Awning fitment guide for assistance.

2.6

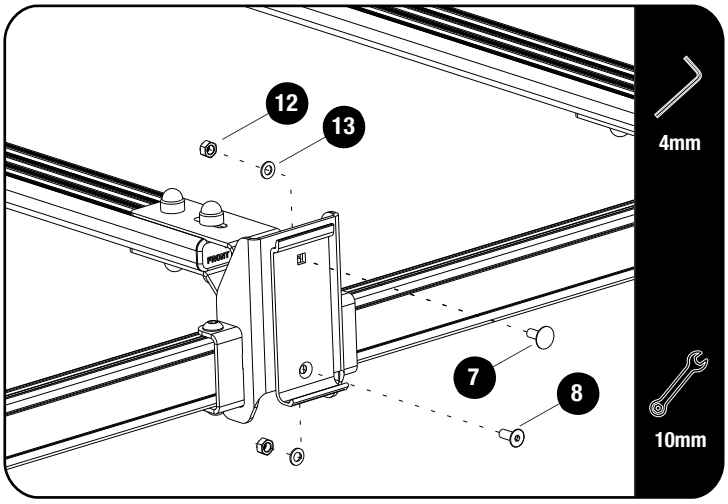

Depending on the length of your Dometic awning, you may need either a narrow adapter (shown in 2.6) or a wide adarpter mounted to the middle Awning Mount Bracket.

© 2022 FRONT RUNNER VEHICLE OUTFITTERS

2 FIT AND SECURE

2.7

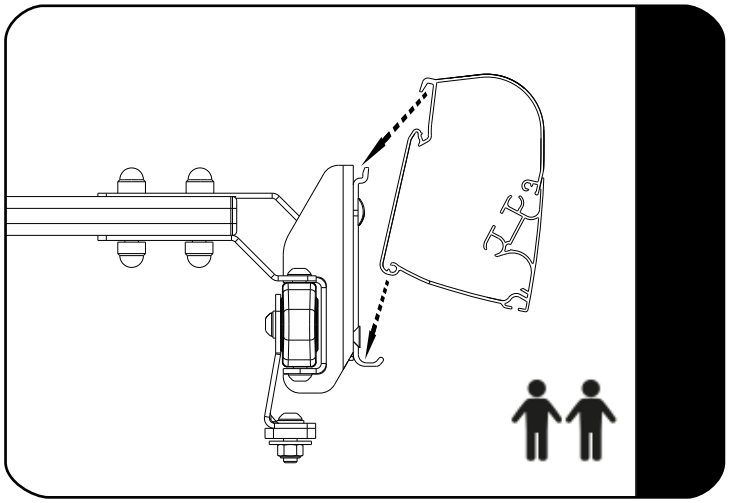

With the help of a friend, hook the awning onto the adaptor as shown in 2.7 & 2.8.

2.8

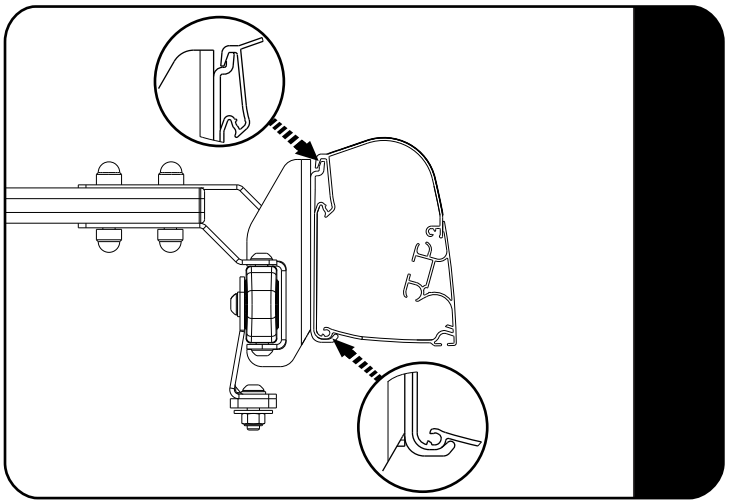

2.9

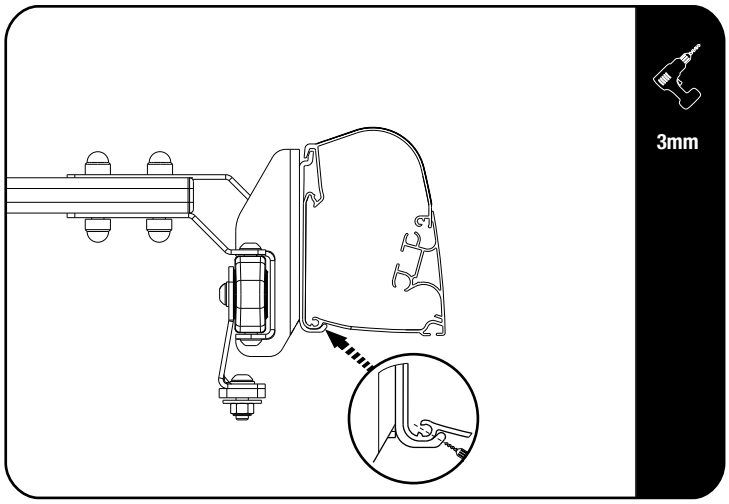

Using a 3mm drill bit, drill through the pre-drilled holes in the adaptor into and through the first skin of the awning.

© 2022 FRONT RUNNER VEHICLE OUTFITTERS

2 FIT AND SECURE

2.10

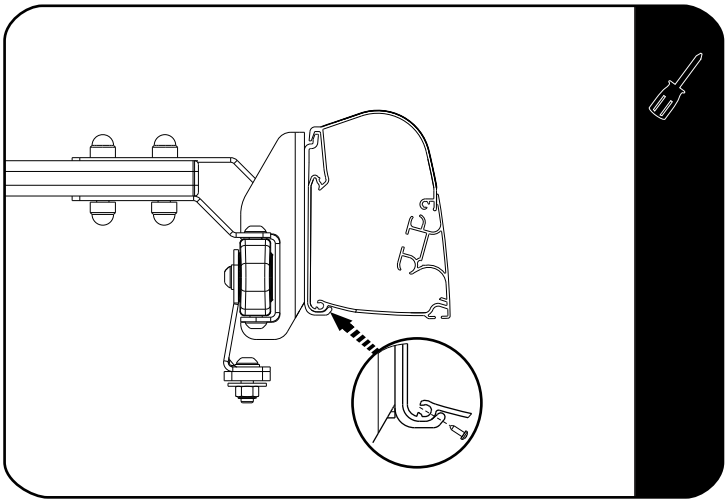

Use the self tapping screws supplied with the awning to secure the awning to the adapters as shown.

Fully tighten all fasteners and refit end-caps.

3 FINISH

Congratulations! You did it. Take a step back and admire your work!

4 INSTALL OTHER VEHICLE AND RACK ACCESSORIES

Now's the time to visit your favorite Front Runner Dealer in person or online.

Be sure to tag us. We love to see our gear in action! #FrontRunnerOutfitters #BornToRoam

Share your adventures on:

© 2022 FRONT RUNNER VEHICLE OUTFITTERS