FRONT RUNNER
VEHICLE OUTFITTERS

PRO WATER TANK SLAT BRACKET

ENG

RRAC219

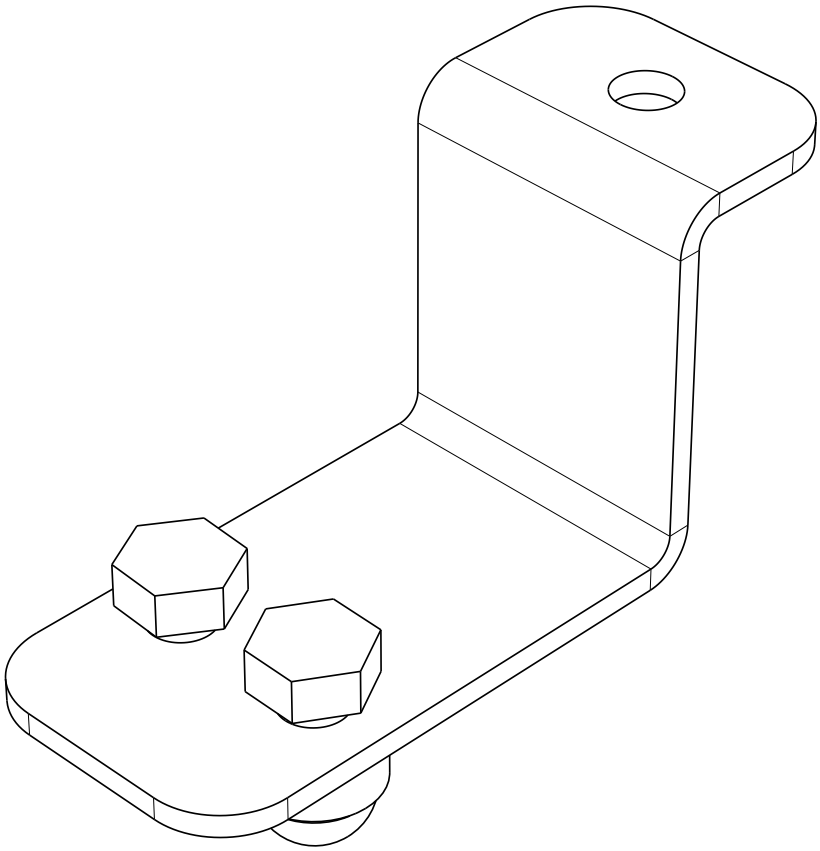

READ ME! ⚠

Thank you for purchasing a Front Runner Pro Water Tank Slat Bracket.

Before you start, take a moment to familiarize yourself with the Fitting Instructions and the included components.

Refer to Page 2 for a list of all the components, quantities and tools required.

IMPORTANT WARNING! ⚠

IT IS CRITICAL THAT ALL FRONT RUNNER PRODUCTS BE PROPERLY AND SECURELY ASSEMBLED AND ATTACHED TO YOUR VEHICLE. IMPROPER ATTACHMENT COULD RESULT IN AN AUTOMOBILE ACCIDENT, AND COULD CAUSE SERIOUS BODILY INJURY OR DEATH. YOU ARE RESPONSIBLE FOR ASSEMBLING AND SECURING ALL FRONT RUNNER PRODUCTS TO YOUR VEHICLE, CHECKING THE ATTACHMENTS PRIOR TO USE, AND PERIODICALLY INSPECTING THE PRODUCTS FOR ADJUSTMENT, WEAR AND DAMAGE. THEREFORE, YOU MUST READ AND UNDERSTAND ALL OF THE INSTRUCTIONS AND PRECAUTIONS SUPPLIED WITH YOUR FRONT RUNNER PRODUCT PRIOR TO INSTALLATION OR USE. IF YOU DO NOT UNDERSTAND ALL OF THE INSTRUCTIONS AND CAUTIONS, OR IF YOU HAVE NO MECHANICAL EXPERIENCE AND ARE NOT THOROUGHLY FAMILIAR WITH THE INSTALLATION PROCEDURES, YOU SHOULD HAVE THE PRODUCT INSTALLED BY A PROFESSIONAL INSTALLER OR OTHER QUALIFIED PERSONNEL.

NOTE: Front Runner will not be responsible for any damage caused by the failure to install the product according to these instructions.

Please call us if you have any questions about the installation of this product.

© 2021 FRONT RUNNER VEHICLE OUTFITTERS

1 GET ORGANIZED

IN THE BOX

1	1 X	Slat Bracket
2	2 X	M8 Nyloc Nut
3	2 X	M8 x 16 Hex Bolt
4	2 X	M8 Nut Cap

TOOLS NEEDED

13mm

Torx T30

FIGURE 1.1

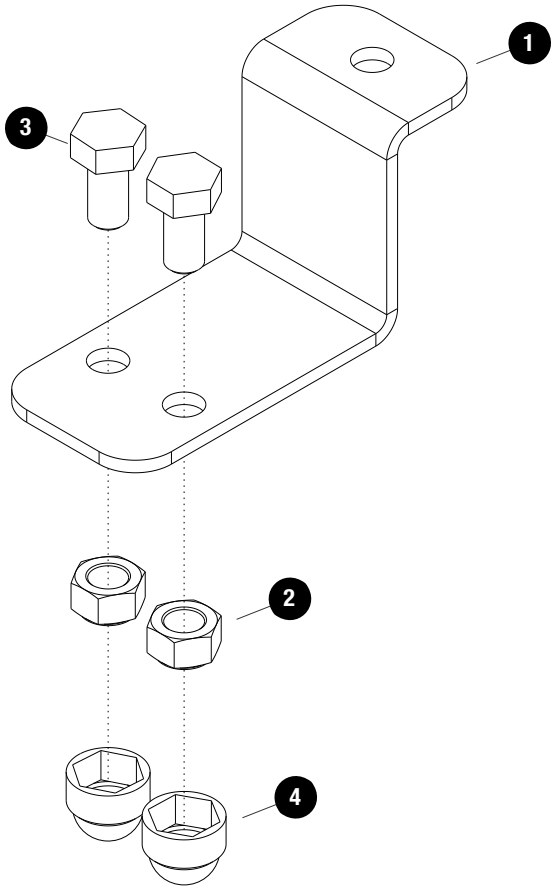

© 2021 FRONT RUNNER VEHICLE OUTFITTERS

2 FIT AND SECURE

2.1

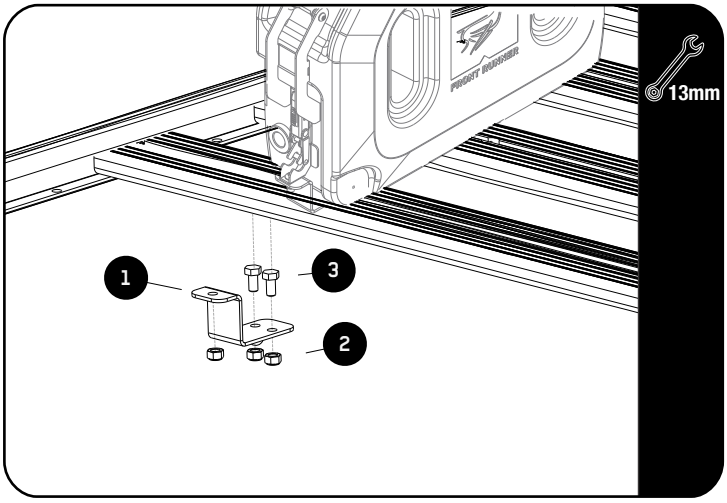

SLIMLINE II SLAT FITMENT

Choose where you would like to mount your Pro Water Tank. you will need 3 slats.

Slide the M8 x 16 Hex Bolt (Item 3) into the bottom of the slat's machined slot and loosely assemble the Mounting Bracket (Item 1) using M8 Nyloc Nuts (Items 2).

2.2

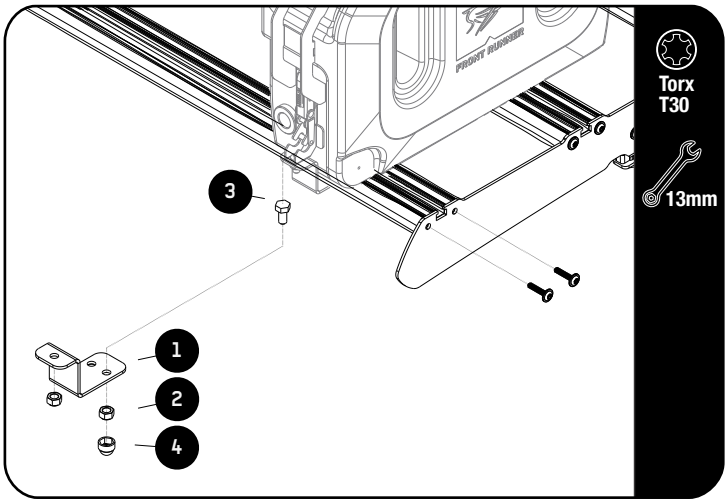

SLIM SPORT RACK FITMENT

Choose where you would like to mount your Pro Water Tank. You will need 3 slats.

Remove the screws as shown, lift the slat slightly and slide two M8x16 Hex Bolts (Item 3) in the bottom T-Slot. Assemble the Bracket as shown using M8 Nyloc Nuts (Item 2).

2.3

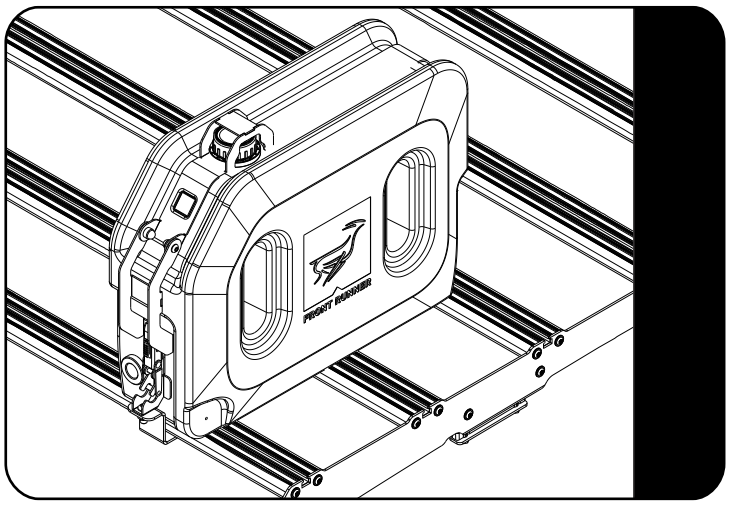

Please note the following items are sold separately:

Mounting System for Pro Water tank 20L (RRAC179).

Pro Water Tank 20L (WTAN058).

© 2021 FRONT RUNNER VEHICLE OUTFITTERS

3

FINISH

Congratulations! You did it. Take a step back and admire your work!

4

INSTALL OTHER VEHICLE AND RACK ACCESSORIES

Now's the time to visit your favorite Front Runner dealer in person or online.

Be sure to tag us. We love to see our gear in action! #FrontRunnerOutfitters #BornToRoam

Share your adventures on:

© 2021 FRONT RUNNER VEHICLE OUTFITTERS