MOUNTING SYSTEM FOR PRO WATER TANK / 42L

ENG

RRAC204

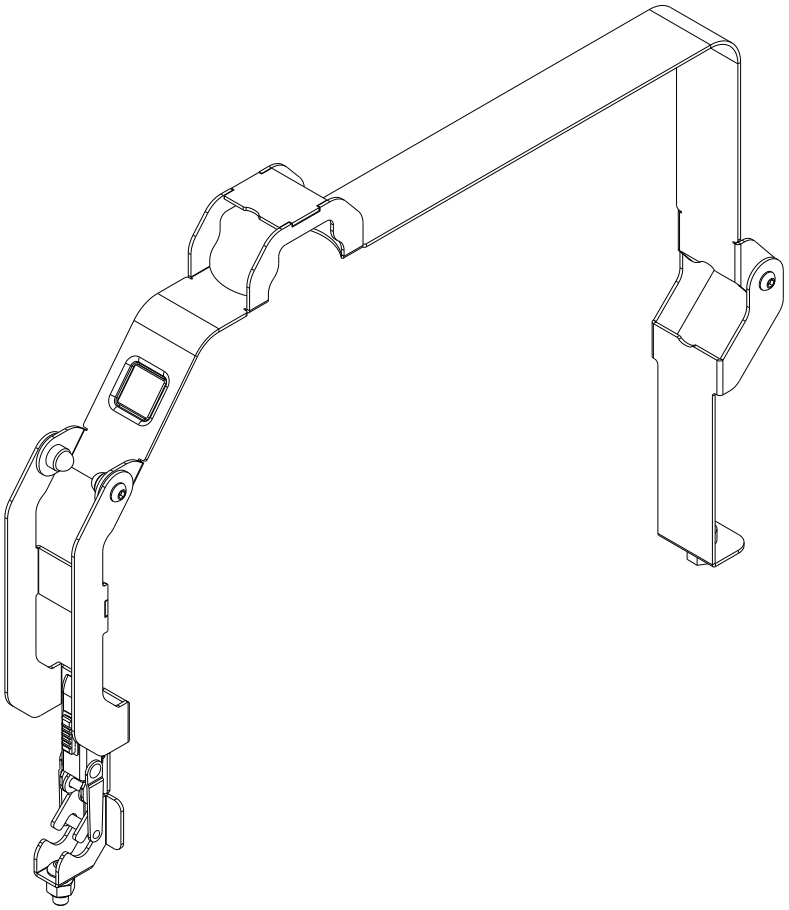

READ ME !

Thank you for purchasing a Front Runner Mounting System for Pro Water Tank / 42L.

Before you start, take a moment to familiarize yourself with the Fitting Instructions and the components received.

Refer to Page 2 for a list of all the components, quantities and tools required.

IMPORTANT WARNING!

IT IS CRITICAL THAT ALL FRONT RUNNER PRODUCTS BE PROPERLY AND SECURELY ASSEMBLED AND ATTACHED TO YOUR VEHICLE. IMPROPER ATTACHMENT COULD RESULT IN AN AUTOMOBILE ACCIDENT, AND COULD CAUSE SERIOUS BODILY INJURY OR DEATH. YOU ARE RESPONSIBLE FOR ASSEMBLING AND SECURING ALL FRONT RUNNER PRODUCTS TO YOUR VEHICLE, CHECKING THE ATTACHMENTS PRIOR TO USE, AND PERIODICALLY INSPECTING THE PRODUCTS FOR ADJUSTMENT, WEAR AND DAMAGE. THEREFORE, YOU MUST READ AND UNDERSTAND ALL OF THE INSTRUCTIONS AND PRECAUTIONS SUPPLIED WITH YOUR FRONT RUNNER PRODUCT PRIOR TO INSTALLATION OR USE. IF YOU DO NOT UNDERSTAND ALL OF THE INSTRUCTIONS AND CAUTIONS, OR IF YOU HAVE NO MECHANICAL EXPERIENCE AND ARE NOT THOROUGHLY FAMILIAR WITH THE INSTALLATION PROCEDURES, YOU SHOULD HAVE THE PRODUCT INSTALLED BY A PROFESSIONAL INSTALLER OR OTHER QUALIFIED PERSONNEL.

NOTE: Front Runner will not be responsible for any damage caused by the failure to install the product according to these instructions.

Please call us if you have any questions about the installation of this product.

© 2021 FRONT RUNNER VEHICLE OUTFITTERS

1 GET ORGANIZED

IN THE BOX

1	1 X	Pro Tank Strap Assembly
2	1 X	Side Profile Catch
3	1 X	M8 x 20 Button head
4	4 X	M8 Nyloc Nut
5	3 X	M8 x 16 Hex Bolt
6	3 X	M8 Nut Cap
7	1 X	550mm T-Slot Rubber
8	1 X	Slat Catch

TOOLS NEEDED

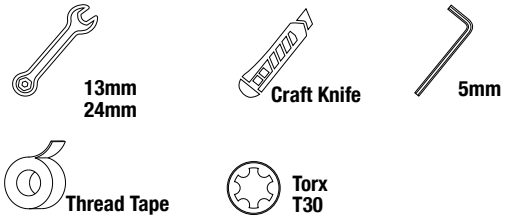

FIGURE 1.1

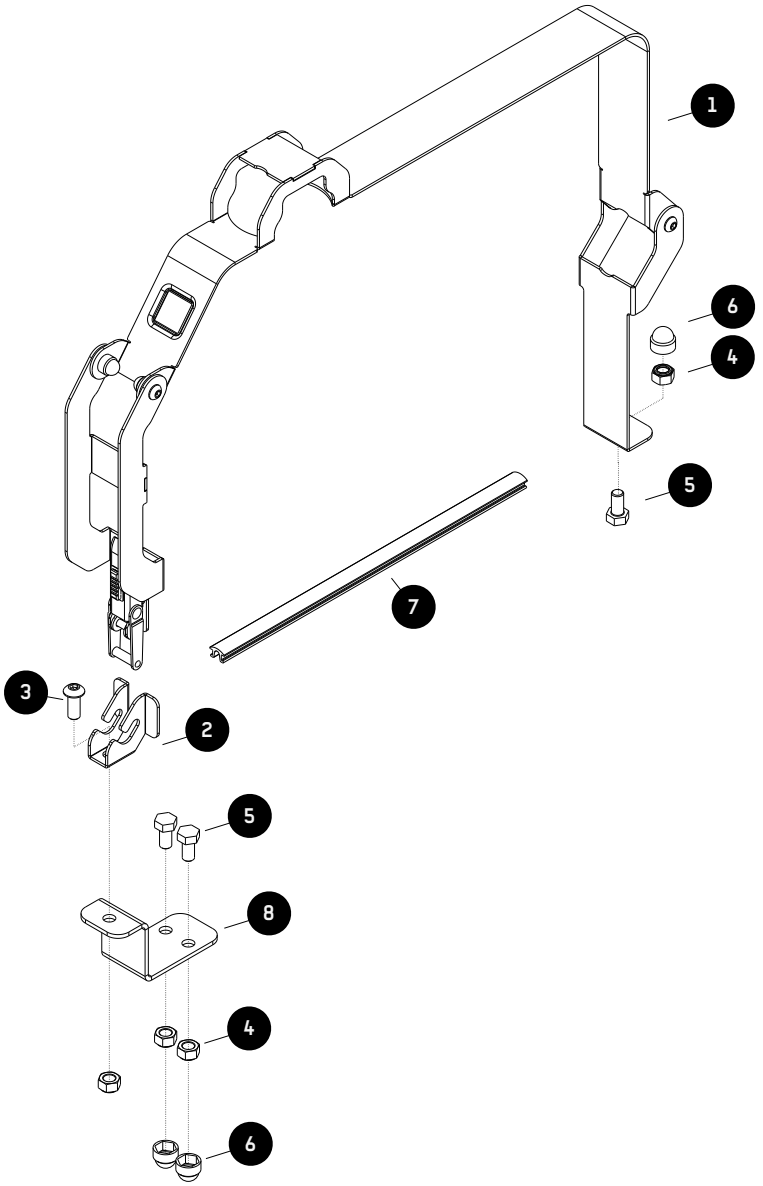

 © 2021 FRONT RUNNER VEHICLE OUTFITTERS

2 FIT AND SECURE

SLII SIDE PROFILE FITMENT

2.1

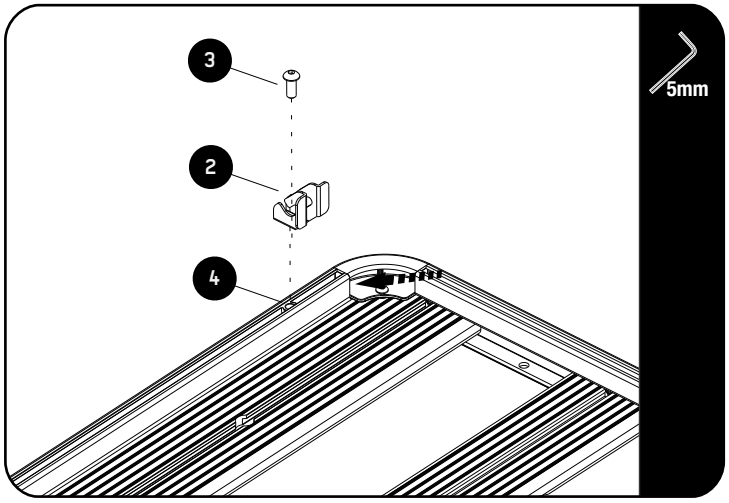

Choose where you would like to mount your Pro Water Tank, on your Front Runner Rack.

Slide one M8 Nyloc Nut (Item 4) into the chosen Combined Slats T-slot.

Loosely fit the Catch (Item 2) using the M8 Nyloc and a M8 x 20 Button Head Bolt (Item 3) as shown.

2.2

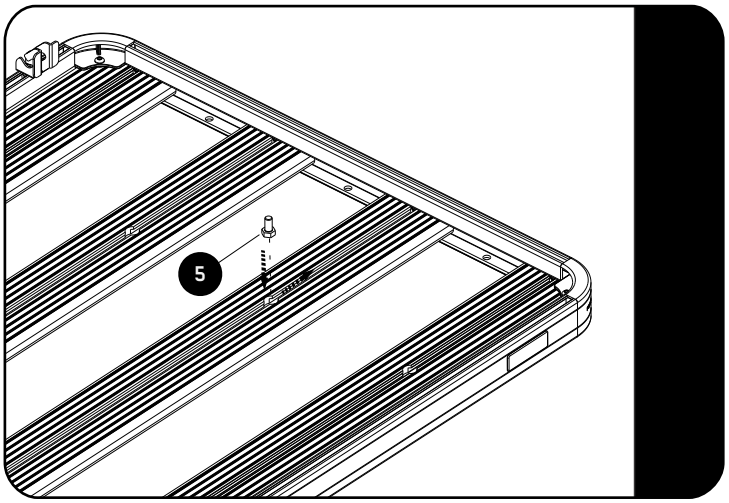

Slide the M8 x 16 Hex Bolt (Item 5) into the 3rd slats machined slot as shown.

2.3

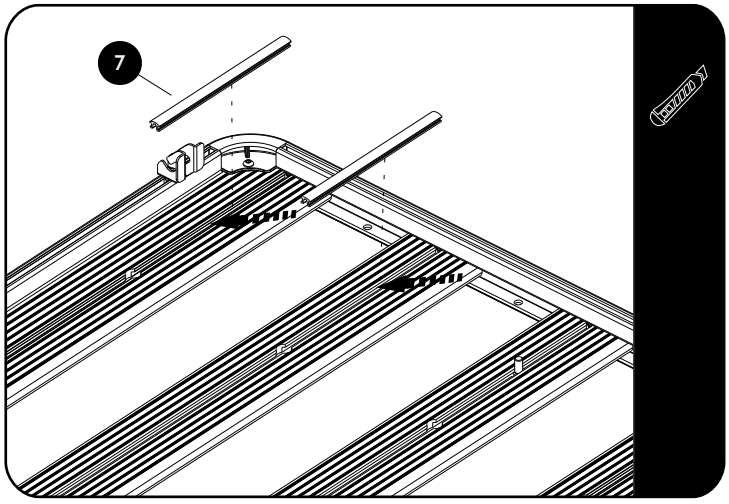

Cut the T-Slot Rubber (Item 7) into two equal lengths before inserting it into the slats T-slot as shown.

© 2021 FRONT RUNNER VEHICLE OUTFITTERS

2 FIT AND SECURE

SLII SIDE PROFILE FITMENT

2.4

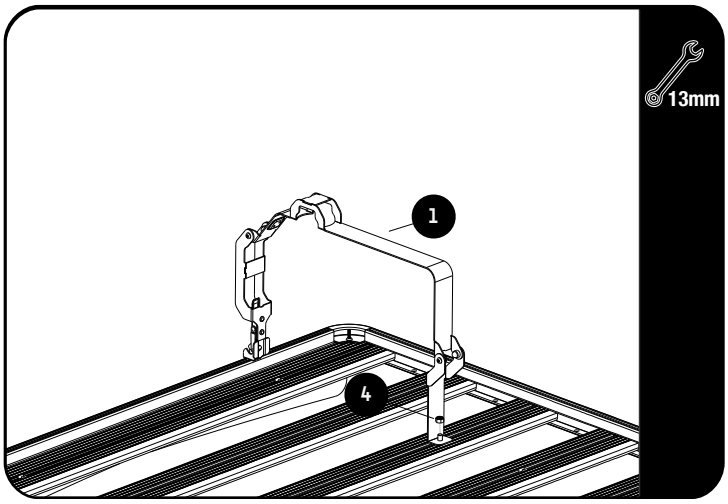

Loosely fit the Pro Tank Strap (Item 1) to the rack using the M8 x 16 Hex Bolt From 2.2 and M8 Nyloc Nut (Item 4) as shown.

2.5

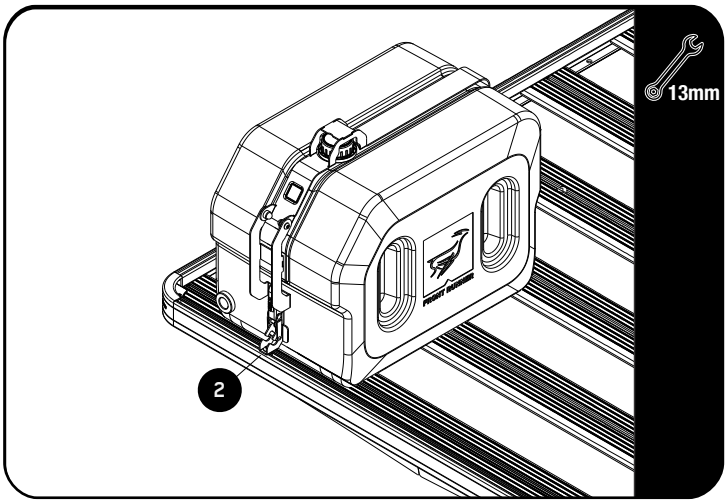

Open the Strap and place the Pro Water Tank onto the rack. Close the Strap over the Water Tank as shown.

Ensure that the Tank and the Strap are aligned before fully tightening the M8 Nyloc on the Strap and the M8 x 20 Button Head Bolt on the Catch (Item 2).

Once secured, place a M8 Nut Cap (Item 6) over the Nyloc Nut.

2.6

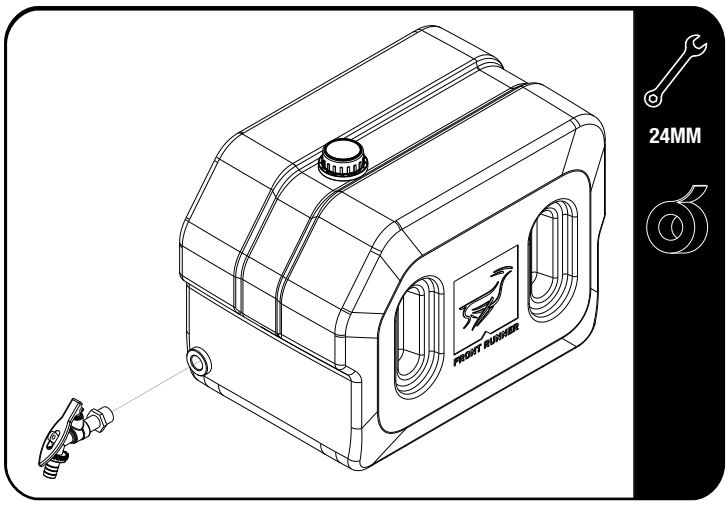

If you are fitting the tap apply thread tape to the thread of the tap.

This will allow the Tap to be aligned to your chosen position and have a water tight seal.

<u>Sold Seperately</u>

Tap - WTAN059
Pro Water Tank / 42L - WTAN062

© 2021 FRONT RUNNER VEHICLE OUTFITTERS

3 FIT AND SECURE

SLII SLAT FITMENT

3.1

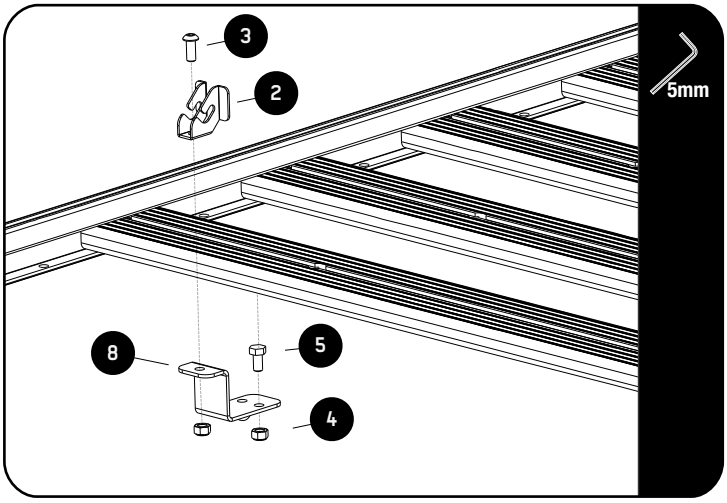

Choose where you would like to mount your Pro Water Tank Bracket.

Slide the M8 x 16 Hex Bolt (Item 5) into the bottom of the slats machined slot and loosely assembly the Slat Catch (Item 8) using M8 Nyloc Nuts(Items 4). assemble theSide Profile Catch onto the Slat Catch using a M8x20 Button Head and M8 Nyloc Nut (Items 2, 3 & 4).

3.2

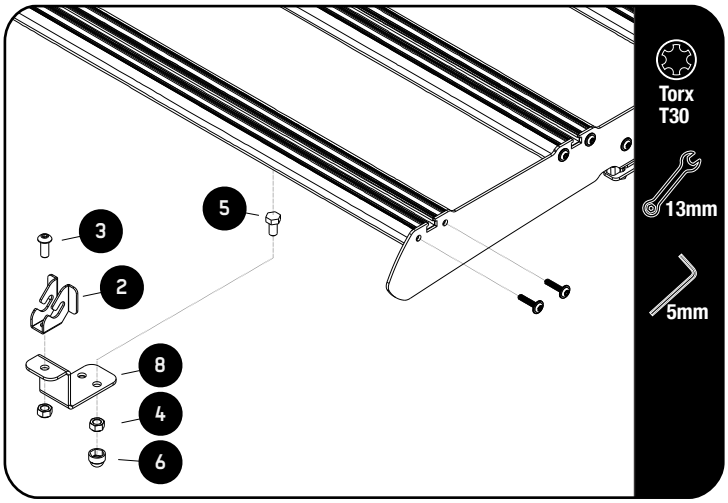

SLIM SPORT RACK FITMENT

Choose where you would like to mount your Pro Water Tank Bracket.

Remove the Self Forming Screws as shown, lift the slat and slide two M8x20 Hex Bolts in the bottom T-Slot. Assemble the Bracket as shown using M8 Nyloc Nut.

3.3

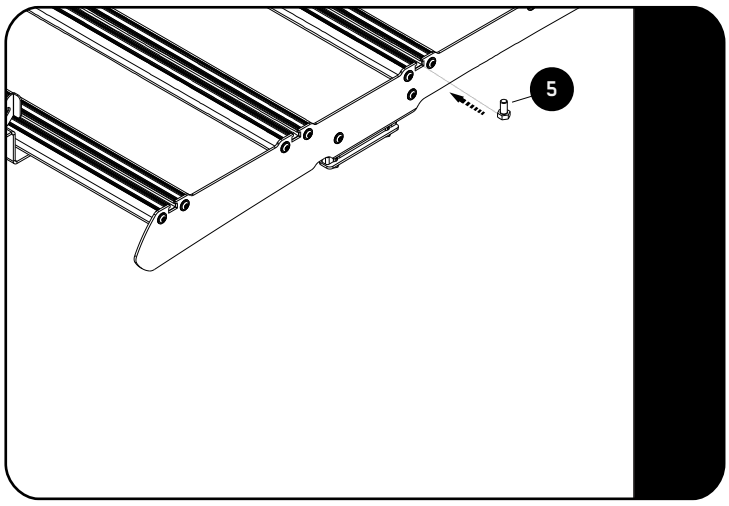

Slide the M8 x 16 Hex Bolt (Item 5) into the 3rd slat as shown.

© 2021 FRONT RUNNER VEHICLE OUTFITTERS

3 FIT AND SECURE

3.4

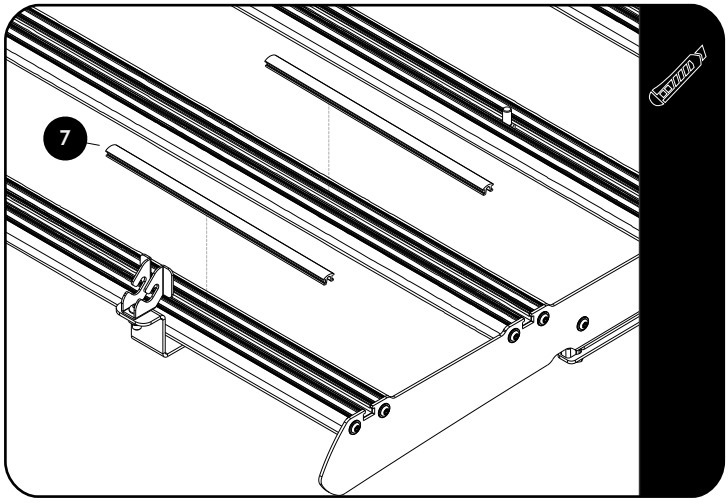

Cut the T-Slot Rubber (Item 7) into two equal lengths before inserting it into the slats T-slot as shown.

3.5

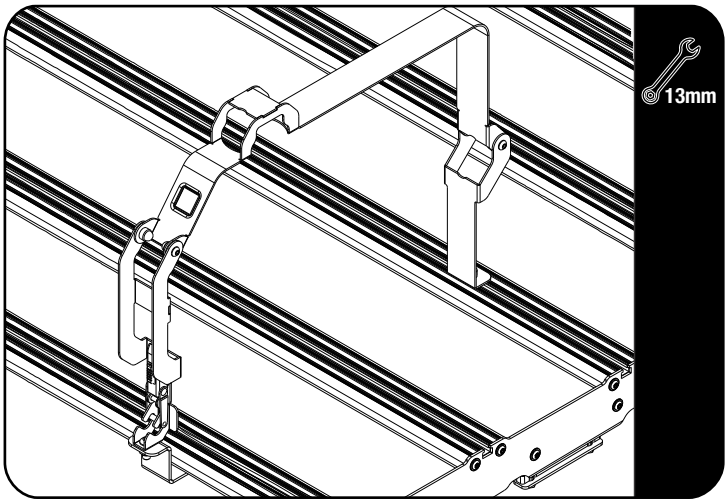

Loosely fit the Pro Tank Strap (Item 1) to the rack using the M8 x 16 Hex Bolt From 3.2 and M8 Nyloc Nut (Item 4) as shown.

3.6

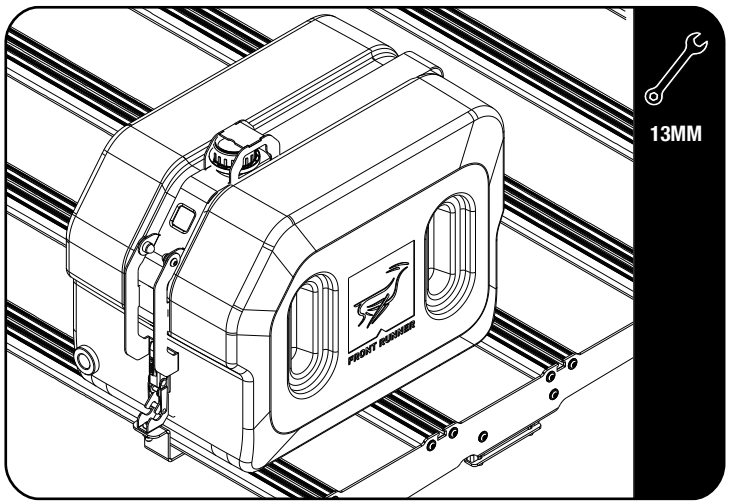

Open the Strap and place the Pro Water Tank onto the rack. Close the Strap over the Water Tank as shown.

Ensure that the Tank and the Strap are aligned before fully tightening the M8 Nyloc on the Strap and the M8 x 20 Button Head Bolt on the Catch (Item 2).

Once secured, place a M8 Nut Cap (Item 6) over the Nyloc Nut.

 © 2021 FRONT RUNNER VEHICLE OUTFITTERS

3 FIT AND SECURE (SLIMSPORT RACK)

3.7

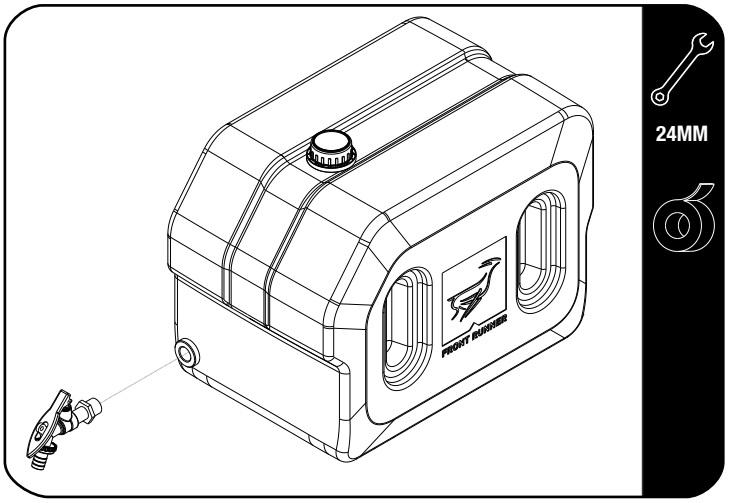

If you are fitting the tap apply thread tape to the thread of the tap.

This will allow the Tap to be aligned to your chosen position and have a water tight seal.

<u>Sold Seperately</u>

Tap - WTAN059
Pro Water Tank / 42L - WTAN062

4 FINISH

Congratulations! You did it. Take a step back and admire your work!

5 INSTALL OTHER VEHICLE AND RACK ACCESSORIES

Now's the time to visit your favorite Front Runner Dealer in person or online.

Be sure to tag us. We love to see our gear in action! #FrontRunnerOutfitters #BornToRoam

Share your adventures on:

© 2021 FRONT RUNNER VEHICLE OUTFITTERS