FRONT RUNNER

FORD F150 SUPER CREW (2009 - CURRENT) SLIMSPORT RACK 40" LIGHT BAR WIND FAIRING

ENG

RRAC194

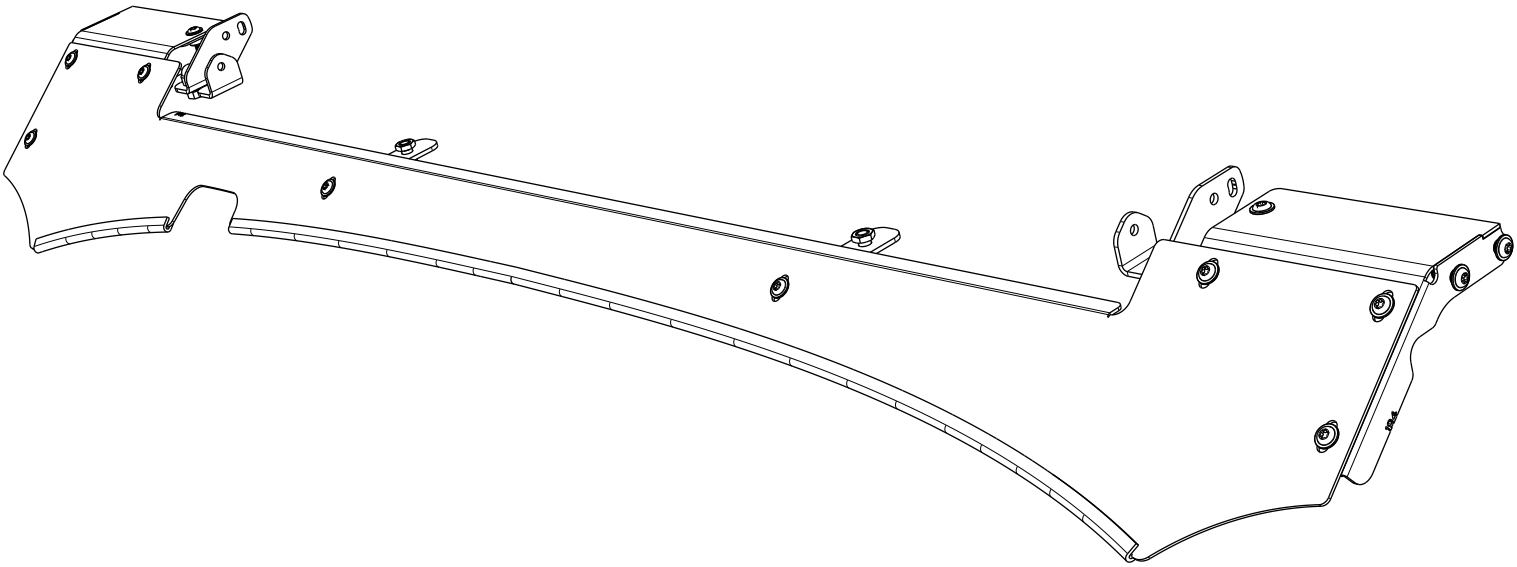

READ ME !

Thank you for purchasing a Front Runner Toyota 4Runner Slimsport rack 40" light bar wind fairing.

Before you start, take a moment to familiarize yourself with the Fitting Instructions and the components received.

Refer to Page 2 for a list of all the components, quantities and tools required.

IMPORTANT WARNING!

IT IS CRITICAL THAT ALL FRONT RUNNER PRODUCTS BE PROPERLY AND SECURELY ASSEMBLED AND ATTACHED TO YOUR VEHICLE. IMPROPER ATTACHMENT COULD RESULT IN AN AUTOMOBILE ACCIDENT, AND COULD CAUSE SERIOUS BODILY INJURY OR DEATH. YOU ARE RESPONSIBLE FOR ASSEMBLING AND SECURING ALL FRONT RUNNER PRODUCTS TO YOUR VEHICLE, CHECKING THE ATTACHMENTS PRIOR TO USE, AND PERIODICALLY INSPECTING THE PRODUCTS FOR ADJUSTMENT, WEAR AND DAMAGE. THEREFORE, YOU MUST READ AND UNDERSTAND ALL OF THE INSTRUCTIONS AND PRECAUTIONS SUPPLIED WITH YOUR FRONT RUNNER PRODUCT PRIOR TO INSTALLATION OR USE. IF YOU DO NOT UNDERSTAND ALL OF THE INSTRUCTIONS AND CAUTIONS, OR IF YOU HAVE NO MECHANICAL EXPERIENCE AND ARE NOT THOROUGHLY FAMILIAR WITH THE INSTALLATION PROCEDURES, YOU SHOULD HAVE THE PRODUCT INSTALLED BY A PROFESSIONAL INSTALLER OR OTHER QUALIFIED PERSONNEL.

NOTE: Front Runner will not be responsible for any damage caused by the failure to install the product according to these instructions.

Please call us if you have any questions about the installation of this product.

 © 2021 FRONT RUNNER VEHICLE OUTFITTERS

1 GET ORGANIZED

IN THE BOX

1	1 X	Light Bar Wind Fairing
2	2 X	Wind Fairing Side Support 1LH & 1RH
3	2 X	Wind Fairing Mid Support
4	2 X	Light Bar Bracket 01 1LH & 1RH
5	2 X	Light Bar Bracket 02
6	14 X	M6x16 Flange Button Head
7	2 X	M8 Thin Hex Nut
8	2 X	M8 Schnorr Washer
9	2 X	M8x12 Button Head
10	4 X	M8x16 Hex Bolt
11	4 X	M8 Nyloc Nut
12	4 X	M8 Nut Cap
13	1 X	Wind Fairing Rubber (1200mm Long)
14	2 X	Support Plate 1LH & 1RH

TOOLS NEEDED

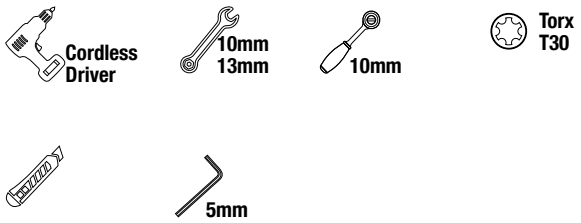

FIGURE 1.1

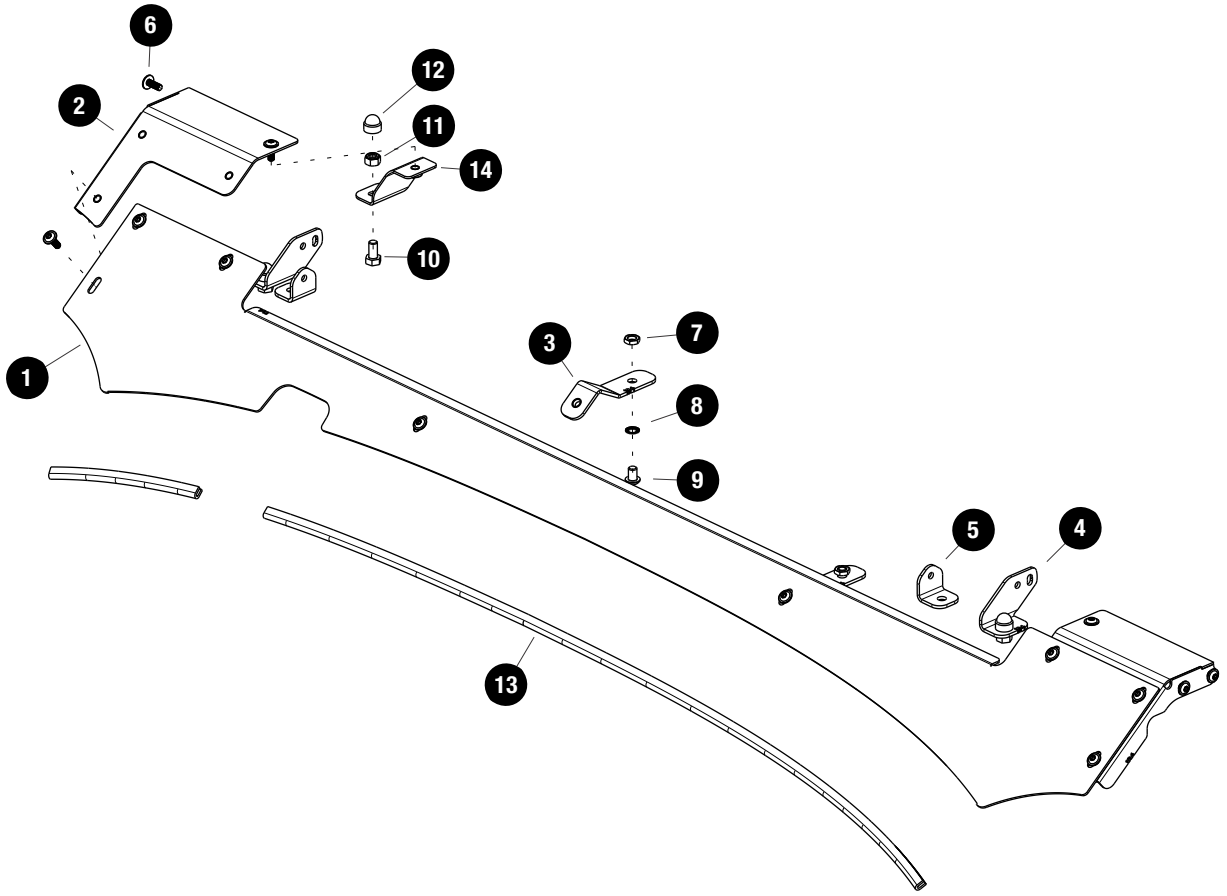

 © 2021 FRONT RUNNER VEHICLE OUTFITTERS

2 FIT AND SECURE

2.1

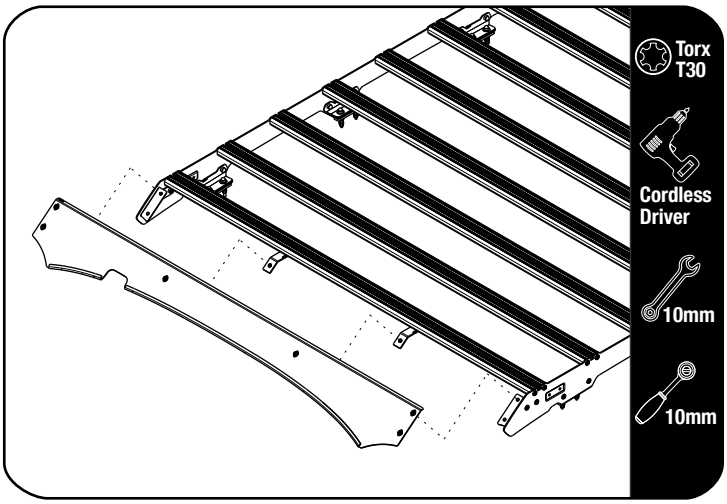

Remove the Slimsport Wind Fairing and Side Support Brackets.

Loosen and remove the front slat.

Keep screws to one side to use later.

2.2

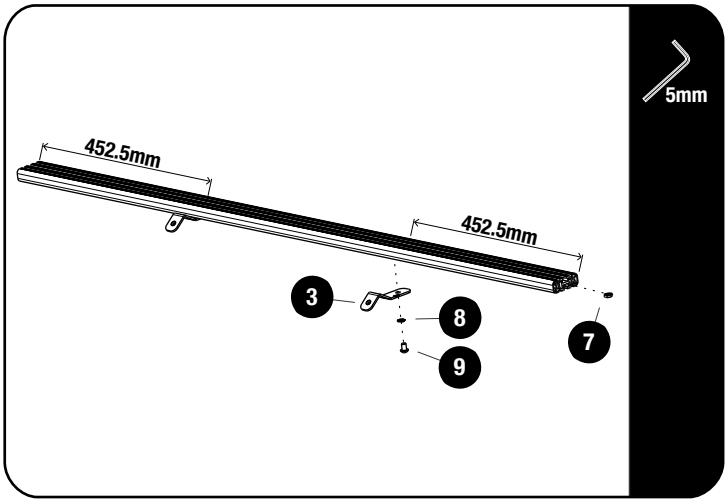

Remove the Wind Fairing Mid Support Bracket that is currently on the slat and replace it with the Fairing Mid Support Bracket supplied with this kit (Item 3).

Measure 452.5mm inward from both ends of the slat and center both Mid Support Brackets on these points. secure using a Schnorr Washer and M8x12 Button Head (Items 8 & 9). Fully tighten.

2.3

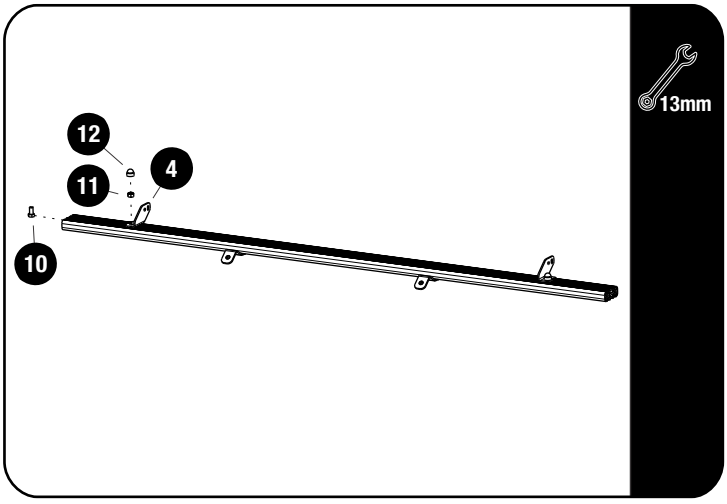

Fit the Light Bar Bracket 01 (Item 4) for for frontrunner 40" light bar, using M8x16 Hex Bolt & M8 Nyloc Nut (Items 10 & 11). Fit light bar and center on slat before fully tightening the brackets.

Fit the Light Bar Bracket 01 (Item 4) for for Front Runner 40" light bar, using M8x16 hex bolt & M8 nyloc nut (Items 10 & 11). Fit light bar and center on slat before fully tightening the brackets.

Place M8 nut caps (Item 12) over all hex bolts.

© 2021 FRONT RUNNER VEHICLE OUTFITTERS

2 FIT AND SECURE

2.4

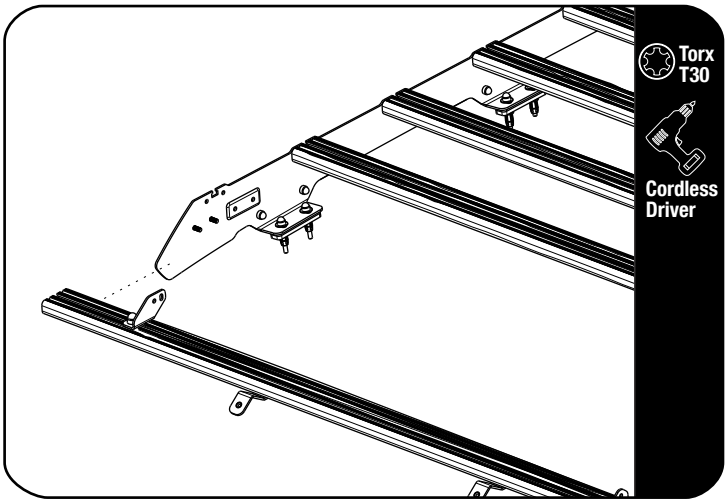

Secure assembly 2.3 to the front two bottom holes on the foot rails using the fasteners removed in step 2.1. Fully tighten.

2.5

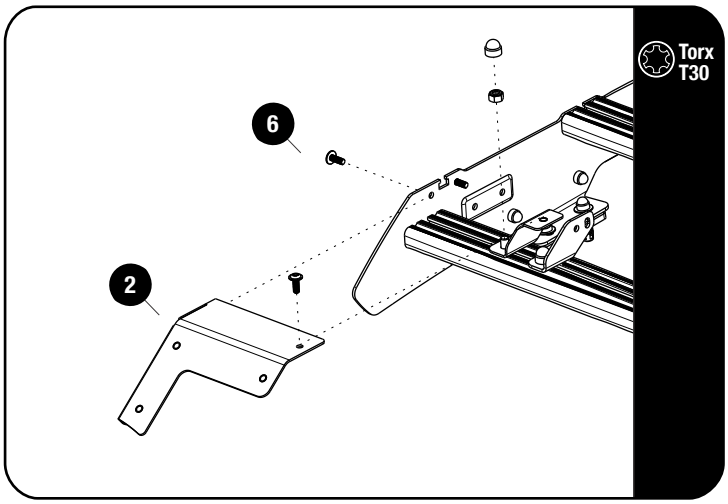

Secure the Wind Fairing Side Supports LH / RH (Item 2) to the foot rails top holes as shown using M6x16 Flange Button Head (Item 6).

2.6

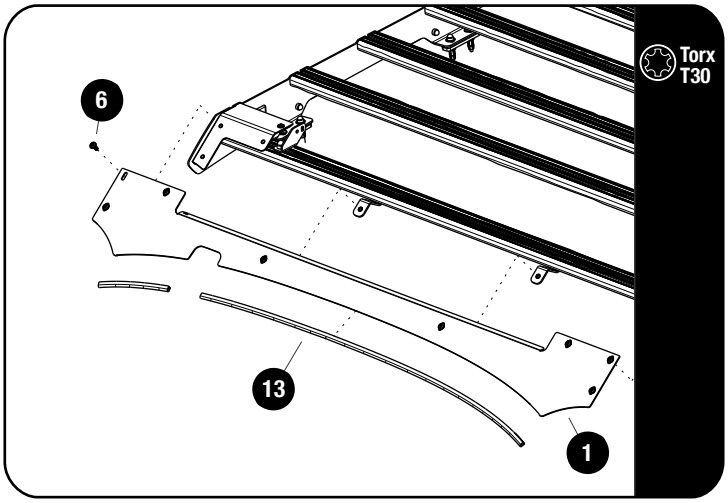

Fit the Wind Fairing Rubber (Item 13) to the Light Bar Wind Fairing (Item 1). Using the notched section as a guide, trim if needed.

Secure the Light Bar Wind Fairing assembly to the rack assembly, using M8x16 Flange Button Heads (Item 6) and fully tighten.

© 2021 FRONT RUNNER VEHICLE OUTFITTERS

3

FINISH

Congratulations! You did it. Take a step back and admire your work!

4

INSTALL OTHER VEHICLE AND RACK ACCESSORIES

Now's the time to visit your favorite Front Runner Dealer in person or online.

Be sure to tag us. We love to see our gear in action! #FrontRunnerOutfitters #BornToRoam

Share your adventures on:

© 2021 FRONT RUNNER VEHICLE OUTFITTERS