FRONT RUNNER

BAJA DESIGNS XL LINKABLE / LP SERIES LIGHT MOUNTING KIT

ENG

RRAC187

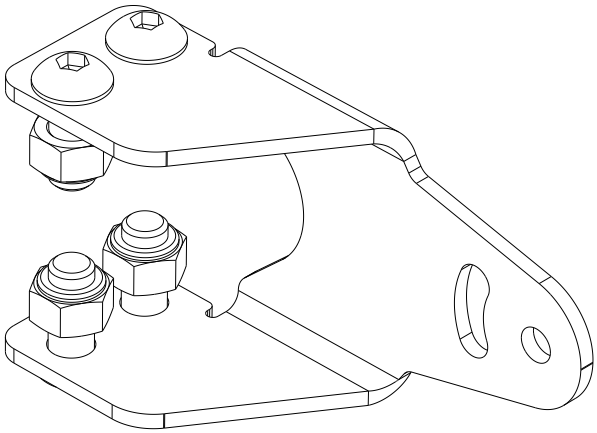

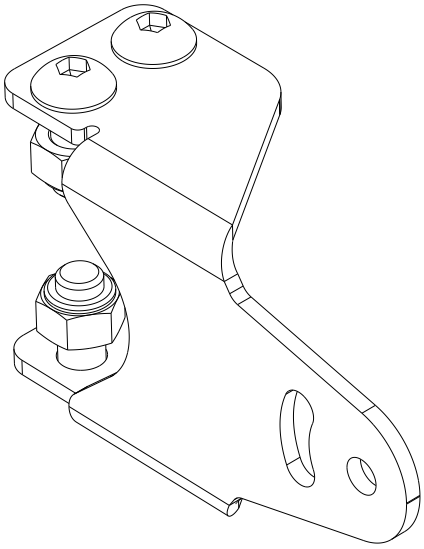

READ ME !

Thank you for purchasing a Front Runner Baja Designs XL Linkable / LP Series Light Mounting Kit.

Before you start, take a moment to familiarize yourself with the Fitting Instructions and the components received.

Refer to Page 2 for a list of all the components, quantities and tools required.

IMPORTANT WARNING!

IT IS CRITICAL THAT ALL FRONT RUNNER PRODUCTS BE PROPERLY AND SECURELY ASSEMBLED AND ATTACHED TO YOUR VEHICLE. IMPROPER ATTACHMENT COULD RESULT IN AN AUTOMOBILE ACCIDENT, AND COULD CAUSE SERIOUS BODILY INJURY OR DEATH. YOU ARE RESPONSIBLE FOR ASSEMBLING AND SECURING ALL FRONT RUNNER PRODUCTS TO YOUR VEHICLE, CHECKING THE ATTACHMENTS PRIOR TO USE, AND PERIODICALLY INSPECTING THE PRODUCTS FOR ADJUSTMENT, WEAR AND DAMAGE. THEREFORE, YOU MUST READ AND UNDERSTAND ALL OF THE INSTRUCTIONS AND PRECAUTIONS SUPPLIED WITH YOUR FRONT RUNNER PRODUCT PRIOR TO INSTALLATION OR USE. IF YOU DO NOT UNDERSTAND ALL OF THE INSTRUCTIONS AND CAUTIONS, OR IF YOU HAVE NO MECHANICAL EXPERIENCE AND ARE NOT THOROUGHLY FAMILIAR WITH THE INSTALLATION PROCEDURES, YOU SHOULD HAVE THE PRODUCT INSTALLED BY A PROFESSIONAL INSTALLER OR OTHER QUALIFIED PERSONNEL.

NOTE: Front Runner will not be responsible for any damage caused by the failure to install the product according to these instructions.

Please call us if you have any questions about the installation of this product.

 © 2021 FRONT RUNNER VEHICLE OUTFITTERS

1 GET ORGANIZED

IN THE BOX		
1	2 X	Mounting Bracket 1LH + 1RH
2	8 X	M8 x 20 Button Head Bolt
3	8 X	M8 Nyloc Nut

TOOLS NEEDED

5mm

FIGURE 1.1

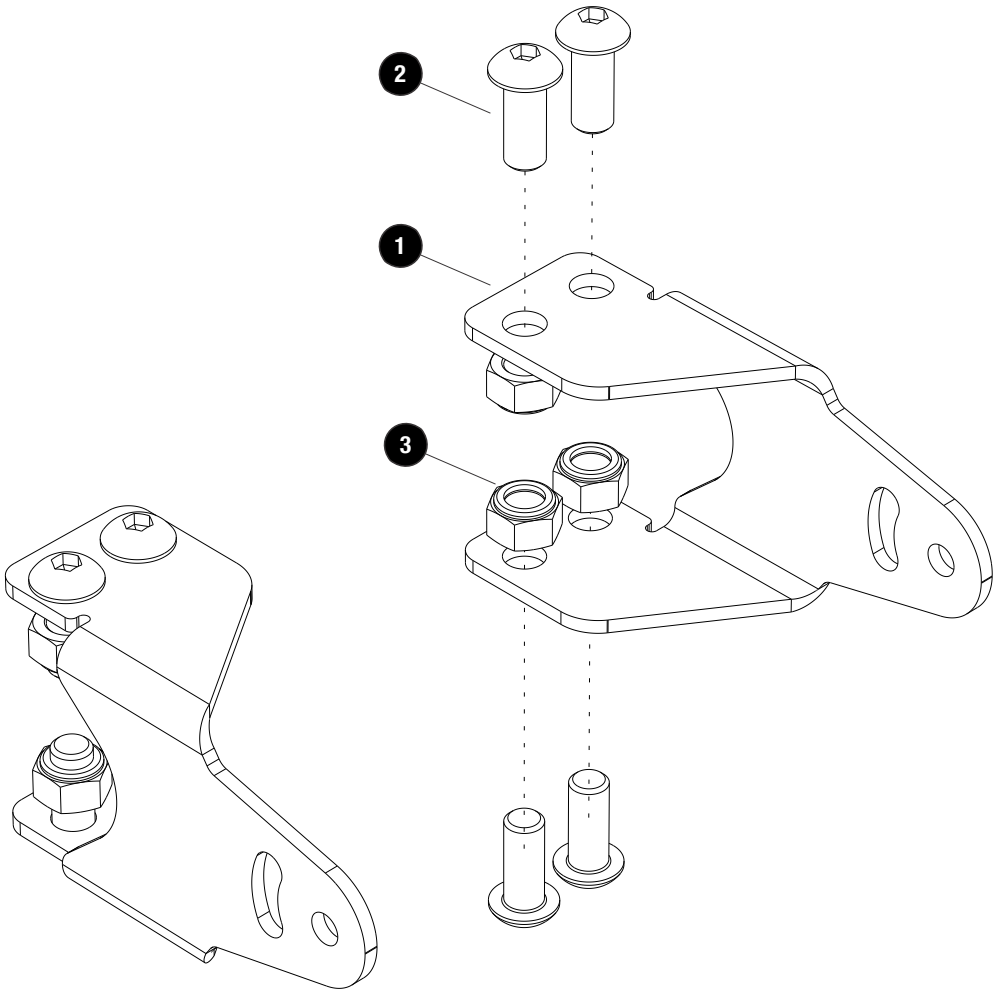

 © 2021 FRONT RUNNER VEHICLE OUTFITTERS

2 FIT AND SECURE A SINGLE BAJA LIGHT

2.1

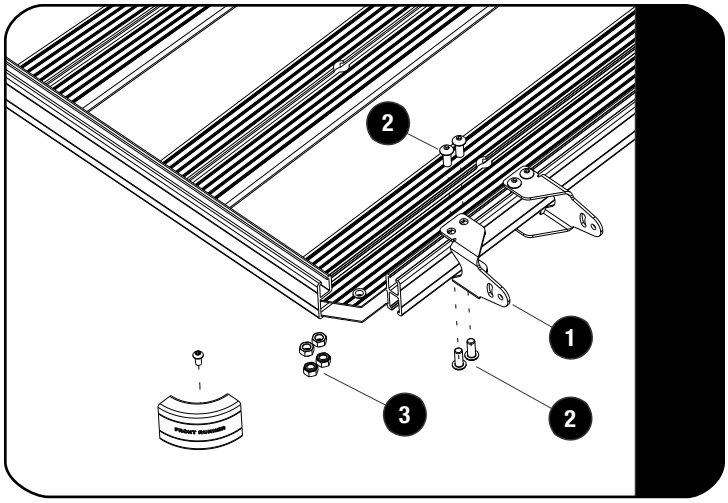

Choose where too mount your Baja Designs linkable LP Series Light.

Loosen the corner and slide four M8 Nyloc Nuts into the combined slat, two in the top t-slot and two in the bottom t-slot.

Using M8 x 20 Button Head Bolts (Item 2) and the Nyloc Nuts, loosely fit one LH and one RH Mounting Bracket (Item 1) to the combined slat.

Refit the rack corner.

2.2

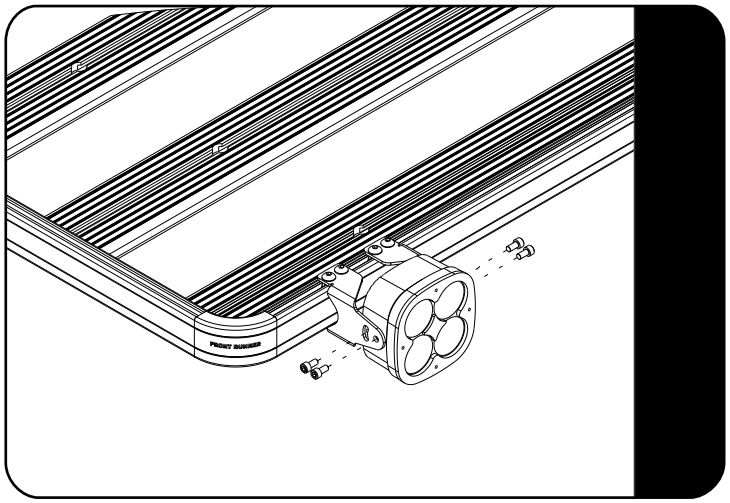

Place your Baja Light between the Mounting brackets and secure using the fasteners supplied with the light.

Fully tighten all the M8 Button Head Bolts.

Refer to your Baja Designs linkable LP Series Light fitment guide for wiring diagrams.

2.3

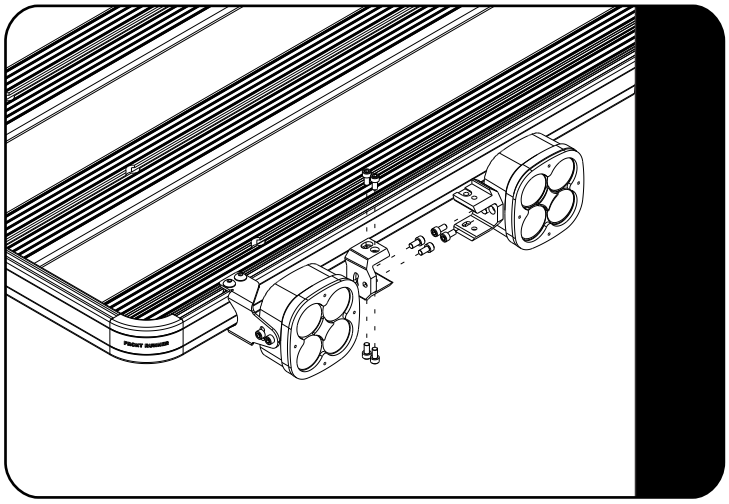

You can also add on lights to your Baja Linkable Light system.

Refer to Baja Designs website for further information..

 © 2021 FRONT RUNNER VEHICLE OUTFITTERS

3

FINISH

Congratulations! You did it. Take a step back and admire your work!

4

INSTALL OTHER VEHICLE AND RACK ACCESSORIES

Now's the time to visit your favorite Front Runner Dealer in person or online.

Be sure to tag us. We love to see our gear in action! #FrontRunnerOutfitters #BornToRoam

Share your adventures on:

© 2021 FRONT RUNNER VEHICLE OUTFITTERS