FRONT RUNNER

WIND FAIRING FOR LOW PROFILE RACK 1165MM 1255MM(W)

ENG

RRAC174

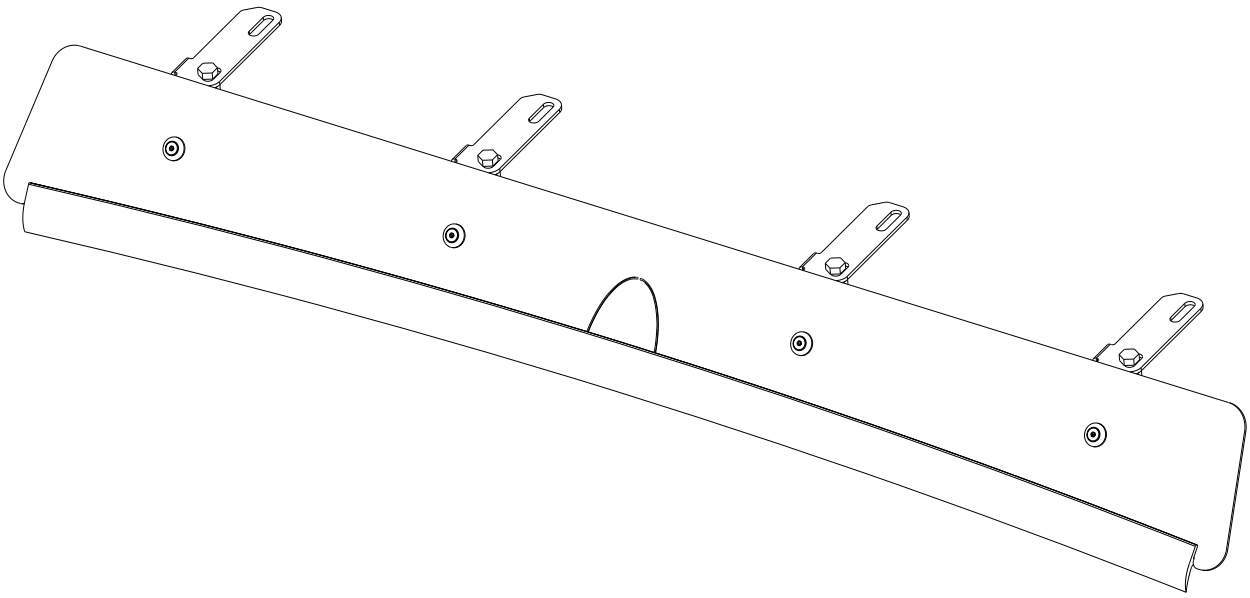

READ ME !

Thank you for purchasing a Front Runner Wind Fairing For Low Profile Rack 1165mm 1255mm(W).

Before you start, take a moment to familiarize yourself with the Fitting Instructions and the components received.

Refer to Page 2 for a list of all the components, quantities and tools required.

IMPORTANT WARNING!

IT IS CRITICAL THAT ALL FRONT RUNNER PRODUCTS BE PROPERLY AND SECURELY ASSEMBLED AND ATTACHED TO YOUR VEHICLE. IMPROPER ATTACHMENT COULD RESULT IN AN AUTOMOBILE ACCIDENT, AND COULD CAUSE SERIOUS BODILY INJURY OR DEATH. YOU ARE RESPONSIBLE FOR ASSEMBLING AND SECURING ALL FRONT RUNNER PRODUCTS TO YOUR VEHICLE, CHECKING THE ATTACHMENTS PRIOR TO USE, AND PERIODICALLY INSPECTING THE PRODUCTS FOR ADJUSTMENT, WEAR AND DAMAGE. THEREFORE, YOU MUST READ AND UNDERSTAND ALL OF THE INSTRUCTIONS AND PRECAUTIONS SUPPLIED WITH YOUR FRONT RUNNER PRODUCT PRIOR TO INSTALLATION OR USE. IF YOU DO NOT UNDERSTAND ALL OF THE INSTRUCTIONS AND CAUTIONS, OR IF YOU HAVE NO MECHANICAL EXPERIENCE AND ARE NOT THOROUGHLY FAMILIAR WITH THE INSTALLATION PROCEDURES, YOU SHOULD HAVE THE PRODUCT INSTALLED BY A PROFESSIONAL INSTALLER OR OTHER QUALIFIED PERSONNEL.

NOTE: Front Runner will not be responsible for any damage caused by the failure to install the product according to these instructions.

Please call us if you have any questions about the installation of this product.

 © 2023 FRONT RUNNER VEHICLE OUTFITTERS

1 GET ORGANIZED

IN THE BOX		
1	4 X	Wind Fairing Bracket
2	1 X	Wind Fairing
3	1 X	Clear Protection Strip

TOOLS NEEDED

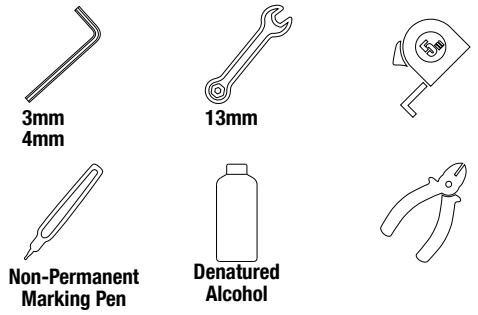

FIGURE 1.1

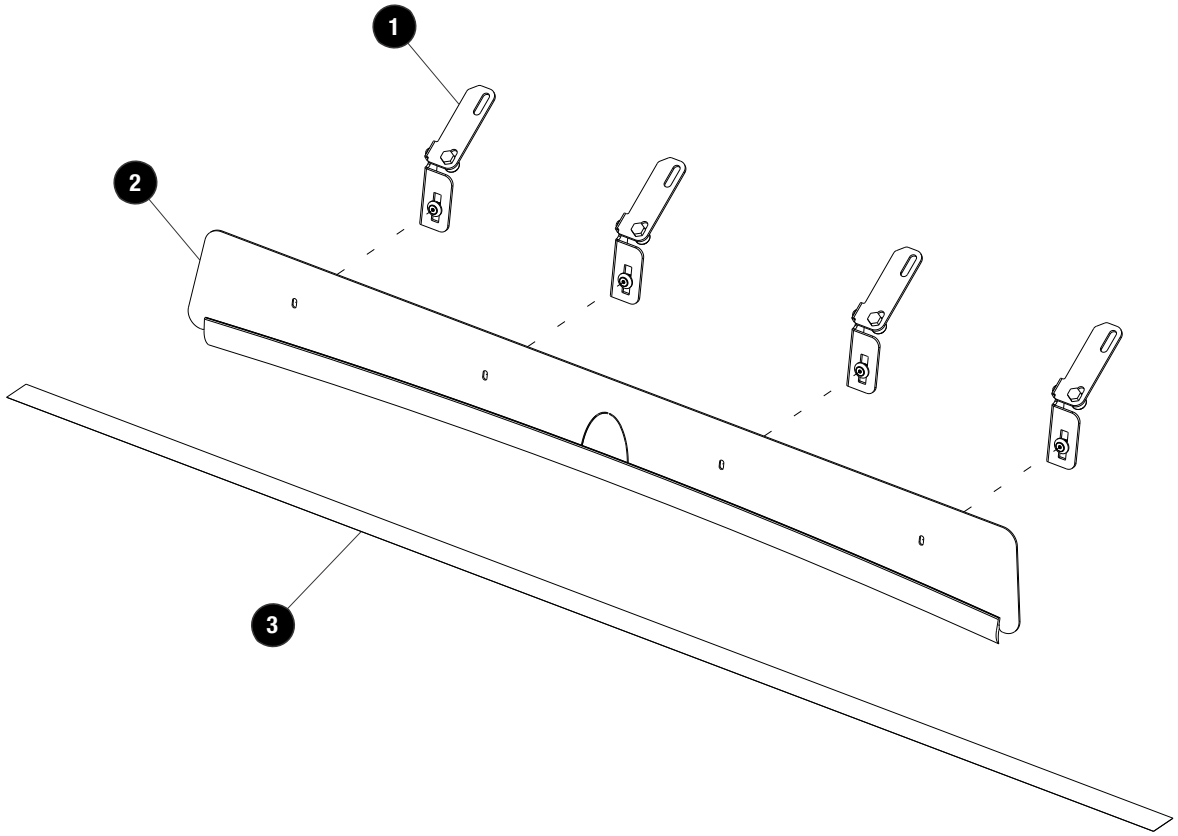

 © 2023 FRONT RUNNER VEHICLE OUTFITTERS

2 FIT AND SECURE

2.1

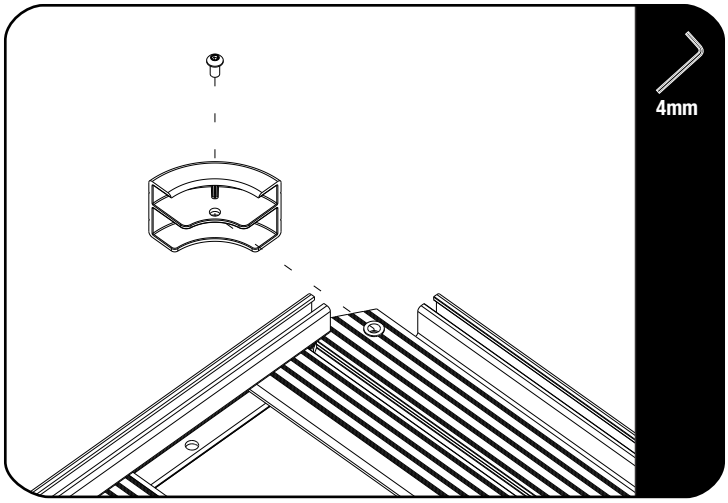

Remove one of the Corner Pieces on the front of your rack.

2.2

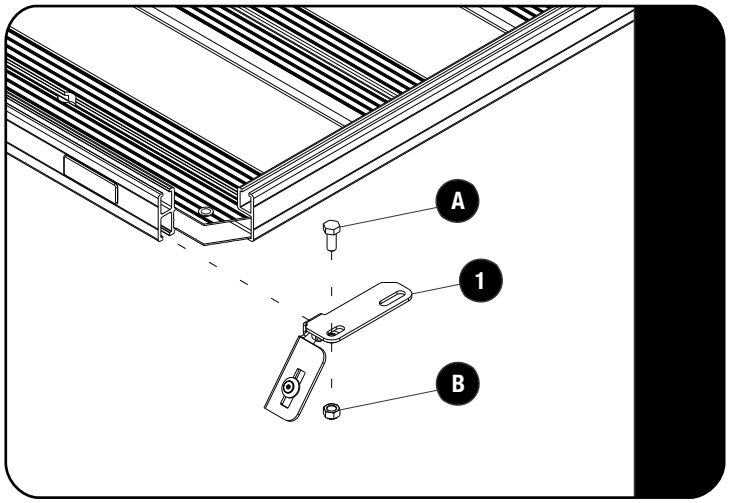

Loosely fit the provided four M8x20 Hex Bolts and four M8 Nyloc Nuts to the Wind Fairing Brackets (Item 1) as shown. Slide the loosley assembled Brackets into the Bottom Channel.

A **M8x20 Hex Bolt**

B **M8 Nyloc Nut**

Refit the front corner removed.

2.3

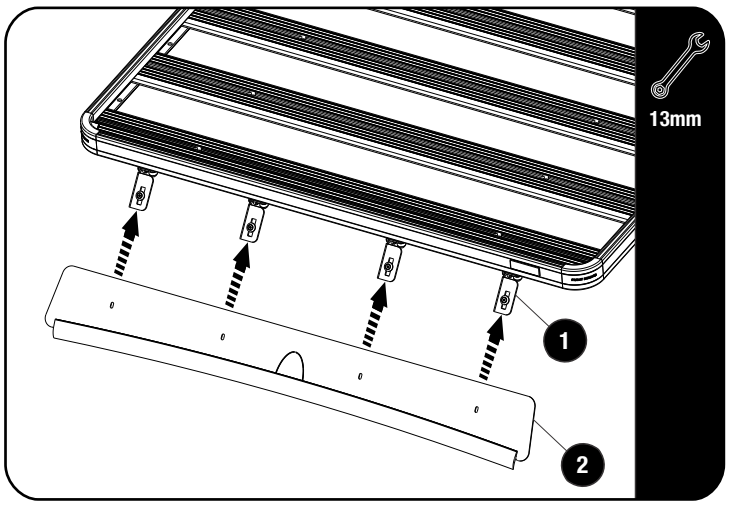

Center the Wind Fairing (Item 2) and position the Wind Fairing Brackets (Item 1) aligning the slotted holes. Fully tighten the Brackets to the rack.

© 2023 FRONT RUNNER VEHICLE OUTFITTERS

2 FIT AND SECURE

2.4

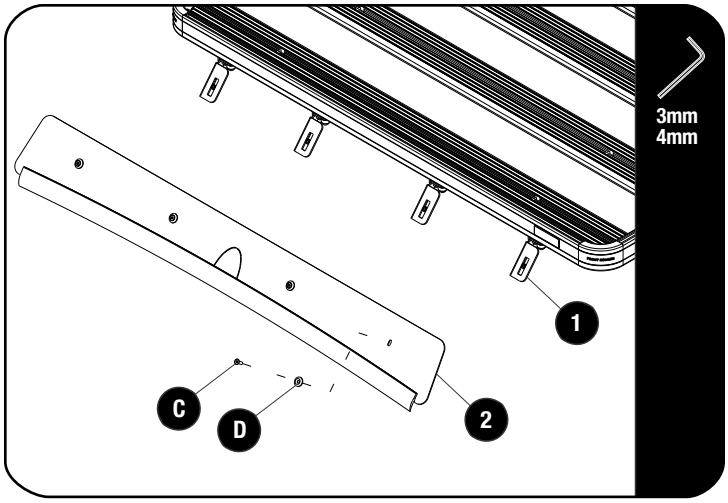

FITMENT WITHOUT ROOF ANTENNA

Remove the M5x16 Countersink Screws and M5 Finishing Washers from the Brackets. Loosley secure the Wind Fairing to the Brackets using the M5x16 Countersink Screws and M5 Finishing Washers. Adjust the Bracket angle and position as required.

The Rubber Trim should sit fully on the vehicle roof along the length. Mark where the Rubber Trim touches the roof.

Carefully remove the Wind Fairing and fully tighten the Brackets.

C M5x16 Countersink Screw

D M5 Finishing Washer

CONTINUE TO 2.7

2.5

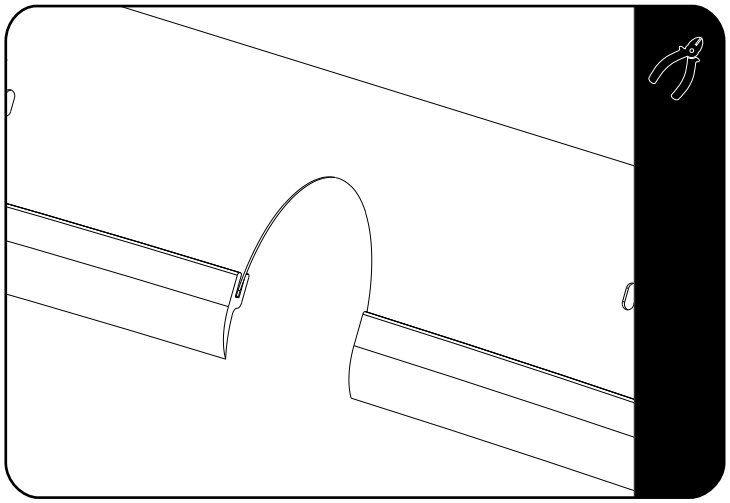

FITMENT WITH ROOF ANTENNA

Remove the Rubber Trim from the Wind Fairing. Use a side cutter and remove the Antenna Clearance Tab. Determine the length requirement for the Rubber Trim on either side of the removed Antenna Clearance Tab. Cut the Rubber Trim according to the required length and refit the Rubber Trim on either side.

2.6

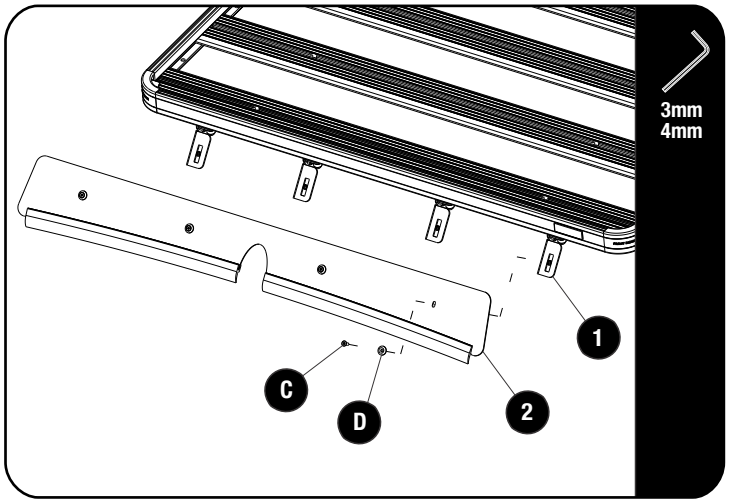

Remove the M5x16 Countersink Screws and M5 Finishing Washers from the Brackets. Loosley secure the Wind Fairing to the Brackets using the M5x16 Countersink Screws and M5 Finishing Washers. Adjust the Bracket angle and position as required.

The Rubber Trim should sit fully on the vehicle roof along the length. Mark where the Rubber Trim touches the roof.

Carefully remove the Wind Fairing and fully tighten the Brackets.

C M5x16 Countersink Screw

D M5 Finishing Washer

© 2023 FRONT RUNNER VEHICLE OUTFITTERS

2 FIT AND SECURE

2.7

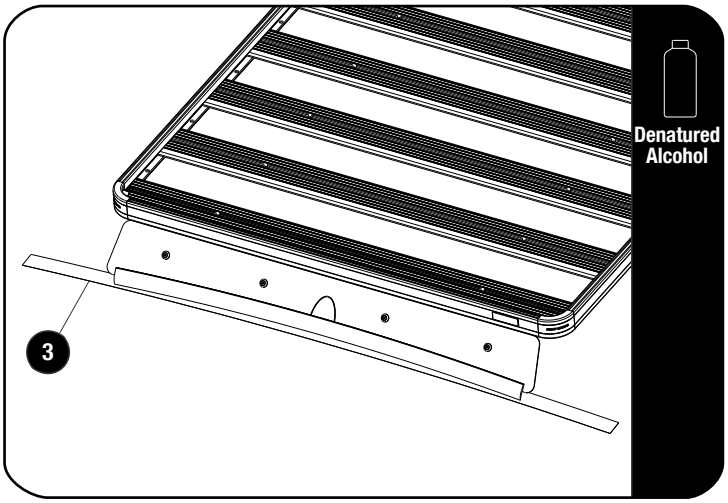

Use the Clear Protection Strip (Item 3) included to protect the roof paint work, where the Rubber Trim will be making contact with the roof.

Apply Denatured Alcohol to make sure the roof is clean before applying.

Refit the Wind Fairing and fully tighten.

3 WIND FAIRING CARE

Clean dust and debris build-up between the Rubber Trim and Clear Protection Strip at regular intervals.

4 FINISH

Congratulations! You did it. Take a step back and admire your work!

5 INSTALL OTHER VEHICLE AND RACK ACCESSORIES

Now's the time to visit your favorite Front Runner Dealer in person or online.

Be sure to tag us. We love to see our gear in action! #FrontRunnerOutfitters #BornToRoam

Share your adventures on:

© 2023 FRONT RUNNER VEHICLE OUTFITTERS