FRONT RUNNER

BIKE CARRIER
LOAD BED RACK SIDE MOUNT

ENG

RRAC172

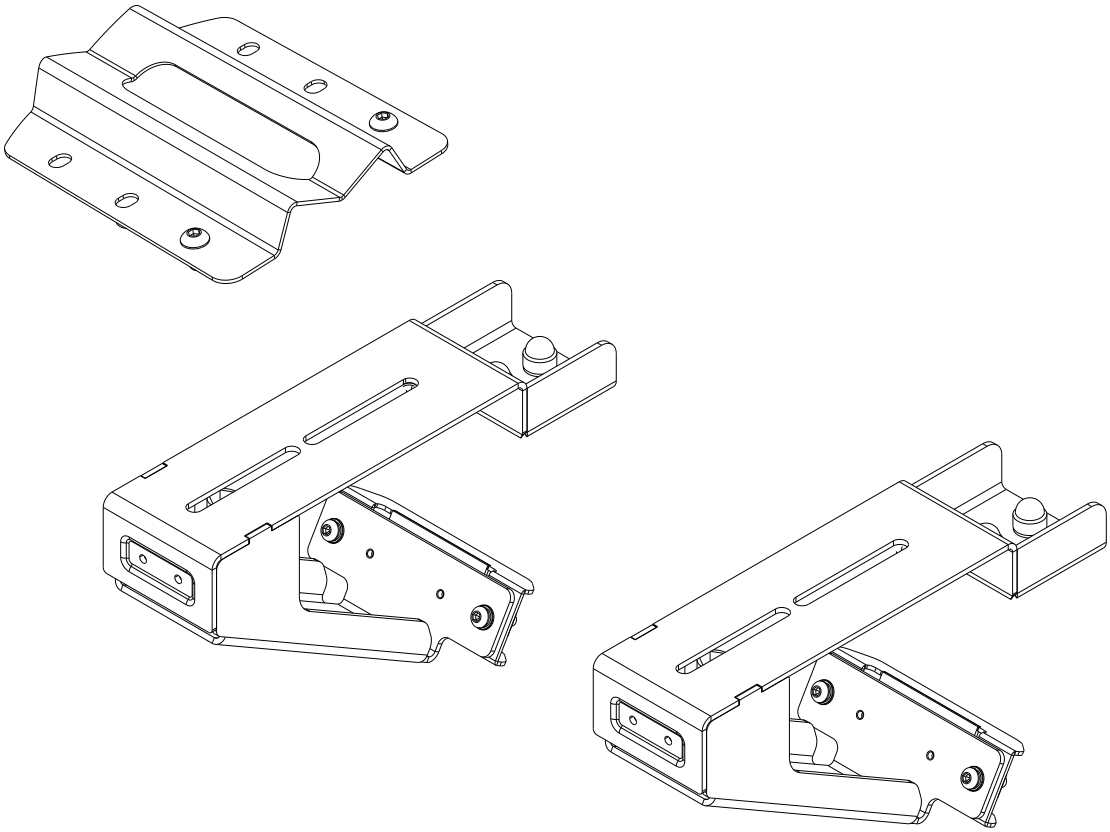

READ ME !

Thank you for purchasing a Front Runner Bike Carrier / Load Bed Rack Side Mount.

Before you start, take a moment to familiarize yourself with the Fitting Instructions and the components received.

Refer to Page 2 for a list of all the components, quantities and tools required.

IMPORTANT WARNING!

IT IS CRITICAL THAT ALL FRONT RUNNER PRODUCTS BE PROPERLY AND SECURELY ASSEMBLED AND ATTACHED TO YOUR VEHICLE. IMPROPER ATTACHMENT COULD RESULT IN AN AUTOMOBILE ACCIDENT, AND COULD CAUSE SERIOUS BODILY INJURY OR DEATH. YOU ARE RESPONSIBLE FOR ASSEMBLING AND SECURING ALL FRONT RUNNER PRODUCTS TO YOUR VEHICLE, CHECKING THE ATTACHMENTS PRIOR TO USE, AND PERIODICALLY INSPECTING THE PRODUCTS FOR ADJUSTMENT, WEAR AND DAMAGE. THEREFORE, YOU MUST READ AND UNDERSTAND ALL OF THE INSTRUCTIONS AND PRECAUTIONS SUPPLIED WITH YOUR FRONT RUNNER PRODUCT PRIOR TO INSTALLATION OR USE. IF YOU DO NOT UNDERSTAND ALL OF THE INSTRUCTIONS AND CAUTIONS, OR IF YOU HAVE NO MECHANICAL EXPERIENCE AND ARE NOT THOROUGHLY FAMILIAR WITH THE INSTALLATION PROCEDURES, YOU SHOULD HAVE THE PRODUCT INSTALLED BY A PROFESSIONAL INSTALLER OR OTHER QUALIFIED PERSONNEL.

NOTE: Front Runner will not be responsible for any damage caused by the failure to install the product according to these instructions.

Please call us if you have any questions about the installation of this product.

 © 2020 FRONT RUNNER VEHICLE OUTFITTERS

1 GET ORGANIZED

IN THE BOX

1	2 X	Side Mount Bracket
2	2 X	Leg Clamp
3	1 X	Extension Plate
4	4 X	M8 x 16 Button Head Bolt
5	8 X	M8 x 16 x 1.6SS Flat Washers
6	8 X	M8 Nyloc Nut
7	8 X	M8 Nut Cap
8	4 X	M6 x 25 Button Head Bolt
9	4 X	M6 SS Spring Washer
10	4 X	M6 x 12 x 1SS Flat Washer
11	4 X	M8 x 20 Hex Bolt
12	4 X	M6 Cage Nut
13	8 X	Rubber Grommet

TOOLS NEEDED

10mm
13mm

4mm
5mm

FIGURE 1.1

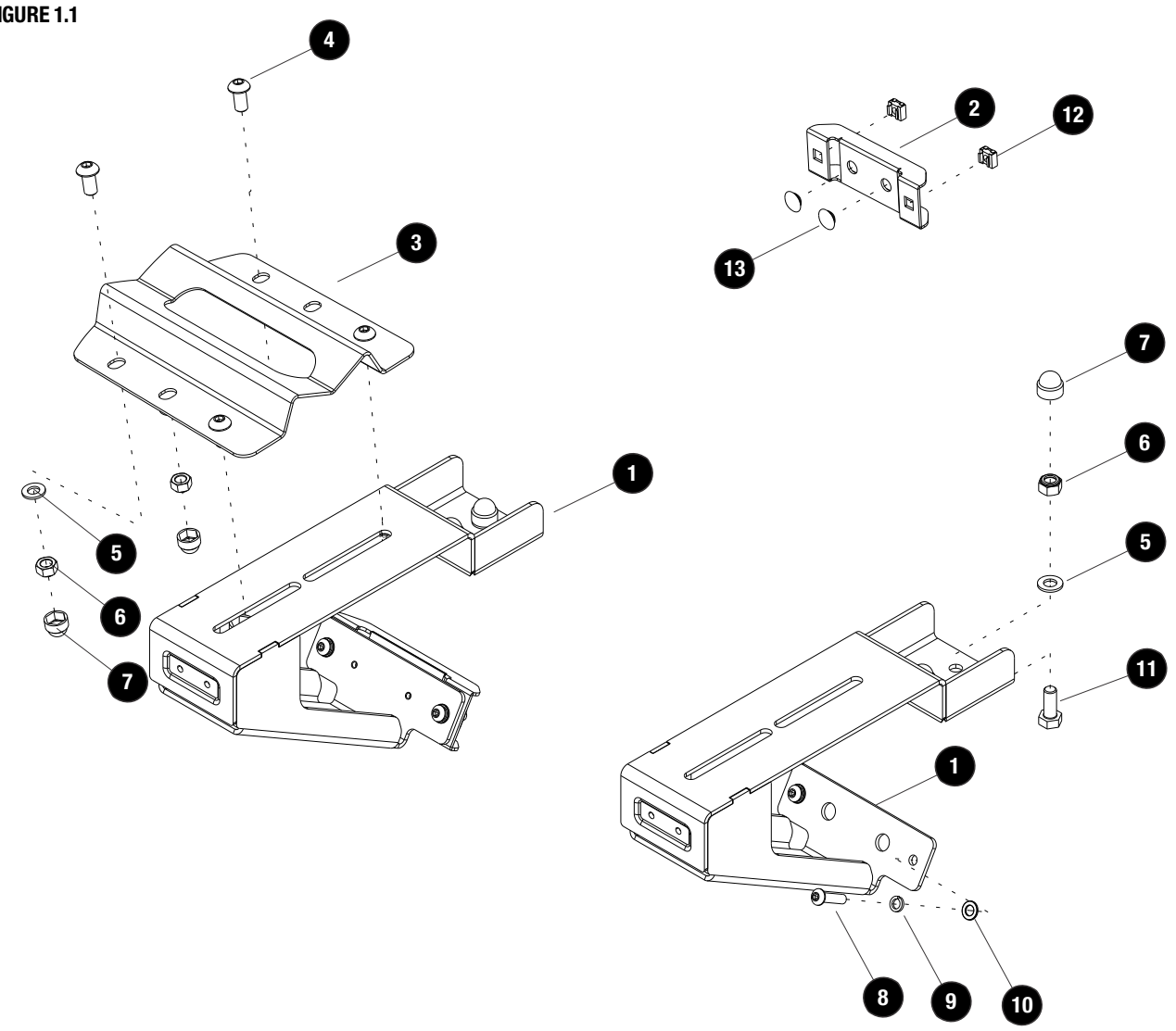

© 2020 FRONT RUNNER VEHICLE OUTFITTERS

2 FIT AND SECURE

2.1

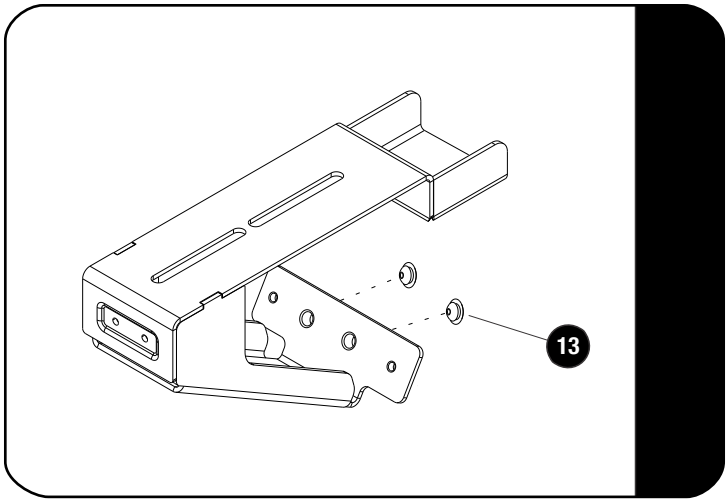

Insert two Rubber Grommets (Item 13) into each of the Side Mount Brackets (Item1).

2.2

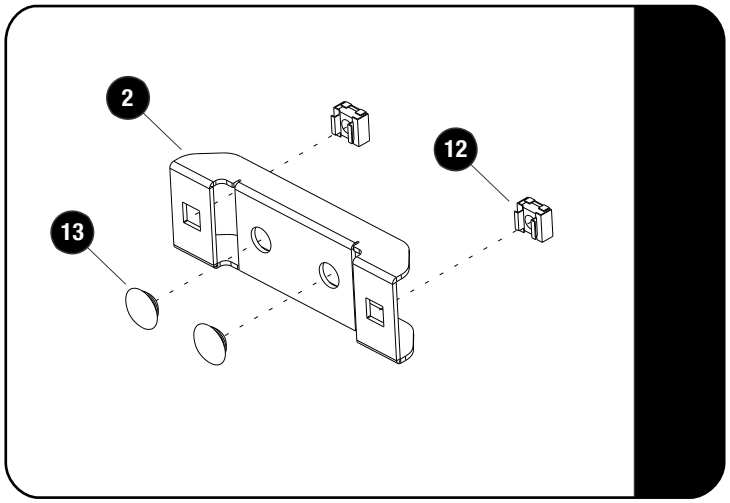

Insert two Cage Nuts and two Rubber Grommets (Items 12 & 13) into each Leg Clamp (Item 2) as shown.

2.3

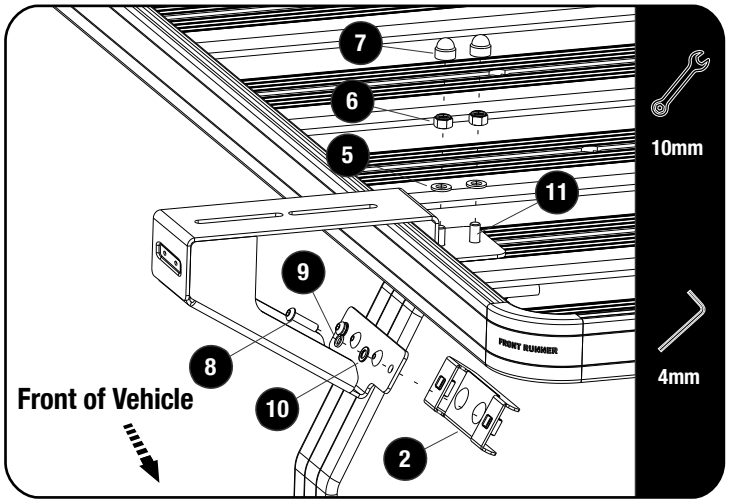

Slide two M8 x 20 Hex Bolts (Item 11) into the machined slots of the slat where the Leg is bolted to.

Place one of the assemblies from 2.1 over the Hex Bolts and let it rest on the Leg as shown.

Loosely fit the top of the assembly to the slat using M8 x 16 x 1.6SS Flat Washers and M8 Nyloc Nuts (Items 5 & 6) as show.

Clamp the Bottom Bracket to the leg using the assembly from 2.2. Secure the Clamp the the Leg using M6 x 25 Button Head Bolts, M6 SS Spring Washer and M6 x 12 x 1SS Flat Washers (Items 8, 9 & 10) as shown.

Fully tighten all the fasteners before placing M8 Nut Caps (Item 8) on the Nyloc Nuts.

Repeat the step on the rear slat where the next Leg is situated.

© 2020 FRONT RUNNER VEHICLE OUTFITTERS

3 FIT AND SECURE RRAC154 - Thru Axle Carrier

3.1

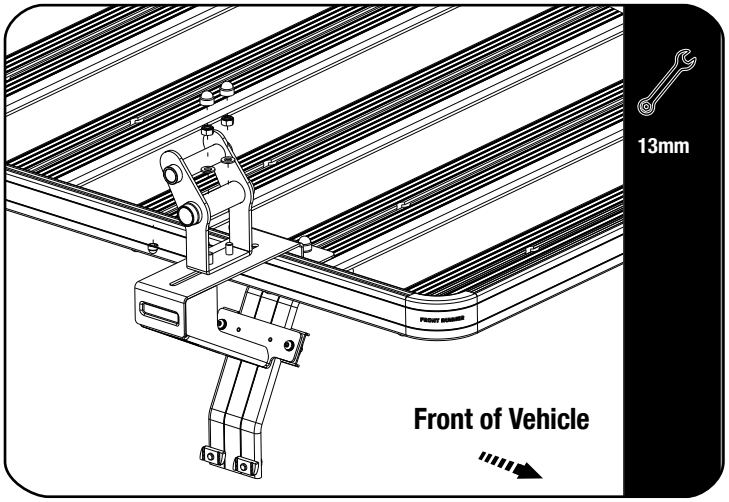

RRAC154 Thru Axle Carrier (sold separately)

Secure the front fork mount bracket to the front assembly using the fasteners supplied with RRAC153.

3.2

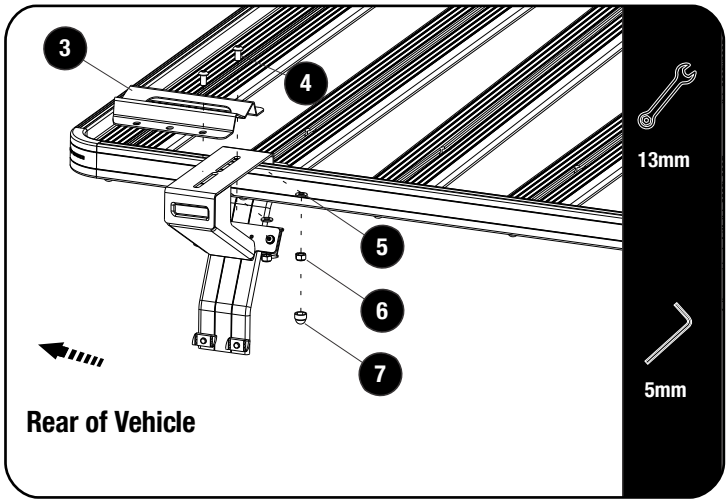

Depending on the size of the bike you may need to fit the Extension Plate (Item 3) to the rear assembly.

Secure the Extension Plate using M8 x 16 Button Head Bolts, M8 x 16 x 1.6SS Flat Washers and M8 Nyloc Nuts (Items 4, 5 & 6) as shown.

Finish off by placing M8 Nut Caps (Item 7) on the Nyloc Nuts.

3.3

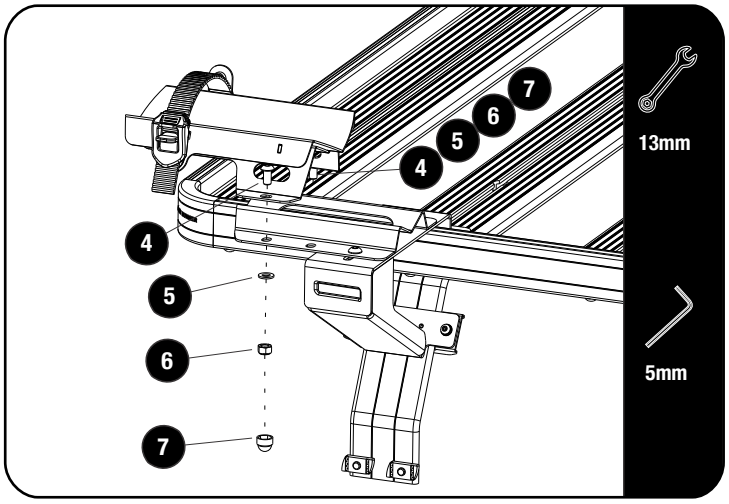

Secure the rear wheel mount bracket (included with RRAC154) to the rear assembly using M8 x 16 Button Head Bolts, M8 x 16 x 1.6SS Flat Washers and M8 Nyloc Nuts (Items 4, 5 & 6) as shown.

Finish off by placing M8 Nut Caps (Item 7) on the Nyloc Nuts.

© 2020 FRONT RUNNER VEHICLE OUTFITTERS

4 FIT AND SECURE RRAC153 - Fork Mount Carrier

4.1

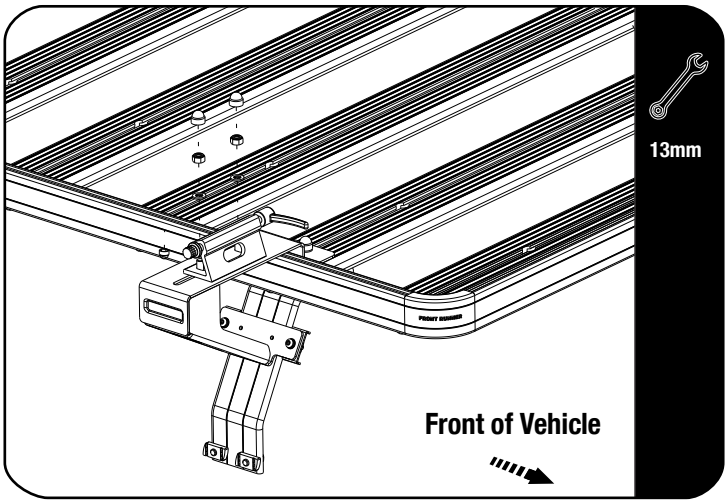

RRAC153 Fork Mount Carrier (sold separately).

Secure the front fork mount bracket to the front assembly using the fasteners supplied with RRAC154.

4.2

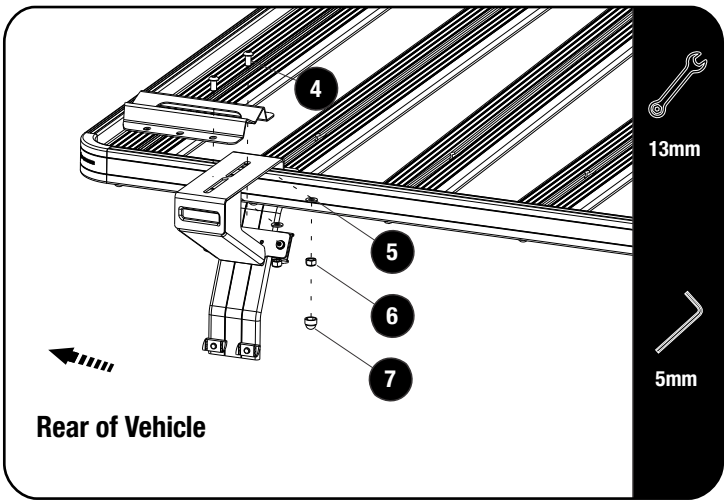

Depending on the size of the bike you may need to fit the Extension Plate (Item 4) to the rear assembly.

Secure the Extension Plate using M8 x 16 Button Head Bolts, M8 x 16 x 1.6SS Flat Washers and M8 Nyloc Nuts (Items 4, 5 & 6) as shown.

Finish off by placing M8 Nut Caps (Item 7) on the Nyloc Nuts.

4.3

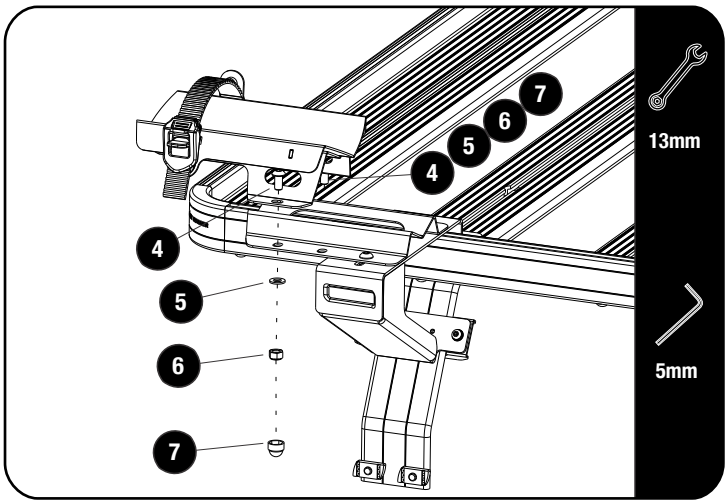

Secure the rear wheel mount bracket (included with RRAC153) to the rear assembly using M8 x 16 Button Head Bolts, M8 x 16 x 1.6SS Flat Washers and M8 Nyloc Nuts (Items 4, 5 & 6) as shown.

Finish off by placing M8 Nut Caps (Item 7) on the Nyloc Nuts.

© 2020 FRONT RUNNER VEHICLE OUTFITTERS

5 FINISH

Congratulations! You did it. Take a step back and admire your work!

6 INSTALL OTHER VEHICLE AND RACK ACCESSORIES

Now's the time to visit your favorite Front Runner Dealer in person or online.

Be sure to tag us. We love to see our gear in action! #FrontRunnerOutfitters #BornToRoam

Share your adventures on:

© 2020 FRONT RUNNER VEHICLE OUTFITTERS