FRONT RUNNER

QUICK RELEASE CARGO BOX BRACKET

ENG

RRAC171

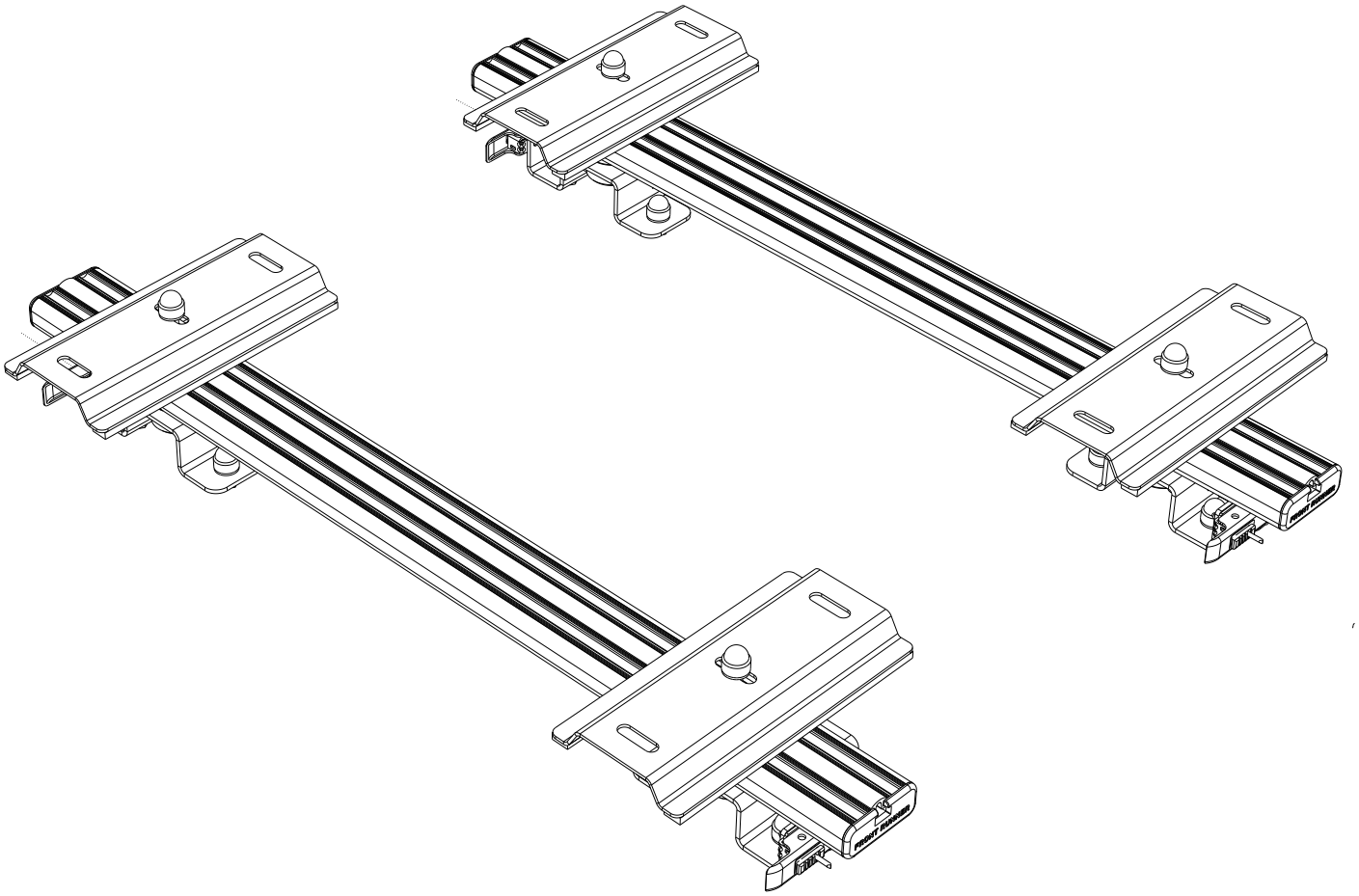

READ ME !

Thank you for purchasing Front Runner Quick Release Cargo Box Bracket.

Before you start, take a moment to familiarize yourself with the Fitting Instructions and the components received.

Refer to Page 2 for a list of all the components, quantities and tools required.

IMPORTANT WARNING!

IT IS CRITICAL THAT ALL FRONT RUNNER PRODUCTS BE PROPERLY AND SECURELY ASSEMBLED AND ATTACHED TO YOUR VEHICLE. IMPROPER ATTACHMENT COULD RESULT IN AN AUTOMOBILE ACCIDENT, AND COULD CAUSE SERIOUS BODILY INJURY OR DEATH. YOU ARE RESPONSIBLE FOR ASSEMBLING AND SECURING ALL FRONT RUNNER PRODUCTS TO YOUR VEHICLE, CHECKING THE ATTACHMENTS PRIOR TO USE, AND PERIODICALLY INSPECTING THE PRODUCTS FOR ADJUSTMENT, WEAR AND DAMAGE. THEREFORE, YOU MUST READ AND UNDERSTAND ALL OF THE INSTRUCTIONS AND PRECAUTIONS SUPPLIED WITH YOUR FRONT RUNNER PRODUCT PRIOR TO INSTALLATION OR USE. IF YOU DO NOT UNDERSTAND ALL OF THE INSTRUCTIONS AND CAUTIONS, OR IF YOU HAVE NO MECHANICAL EXPERIENCE AND ARE NOT THOROUGHLY FAMILIAR WITH THE INSTALLATION PROCEDURES, YOU SHOULD HAVE THE PRODUCT INSTALLED BY A PROFESSIONAL INSTALLER OR OTHER QUALIFIED PERSONNEL.

NOTE: Front Runner will not be responsible for any damage caused by the failure to install the product according to these instructions.

Please call us if you have any questions about the installation of this product.

 © 2022 FRONT RUNNER VEHICLE OUTFITTERS

1 GET ORGANIZED

IN THE BOX

1	2 X	Slat
2	4 X	Slat End Cap
3	8 X	M8 Thin Nut
4	2 X	Release Bracket RH
5	16 X	M8 Flat Washer
6	4 X	M8 Spring Washer
7	4 X	M8 x 16 Button Head Screws
8	2 X	Catch Bracket RH
9	8 X	M8 x 20 Hex Head Bolt
10	2 X	Catch Bracket LH
11	12 X	M8 Nyloc Nut
12	12 X	M8 Nut Cap
13	4 X	M8 x 30 Cap Screw
14	4 X	Quick Release Bobbin

IN THE BOX

15	2 X	Release Bracket LH
16	4 X	M8 x 35 Hex Head Bolt
17	2 X	T - Slot Rubber - 700mm
18	8 X	Self Adhesive Rubber Strip - 195mm
19	4 X	Box Bracket - A
20	4 X	Box Bracket - B

TOOLS NEEDED

FIGURE 1.1

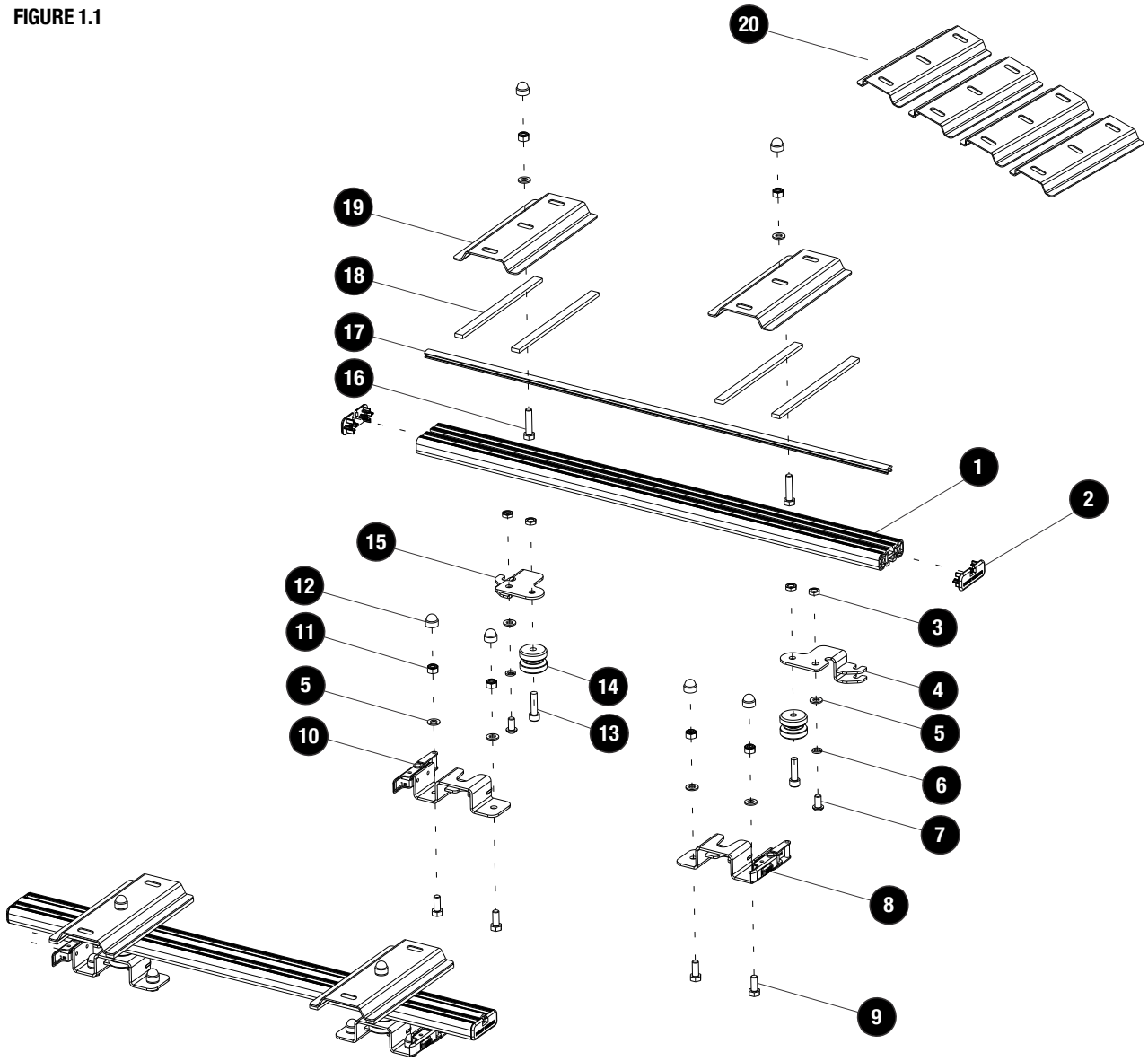

 © 2022 FRONT RUNNER VEHICLE OUTFITTERS

2 FIT AND SECURE

2.1

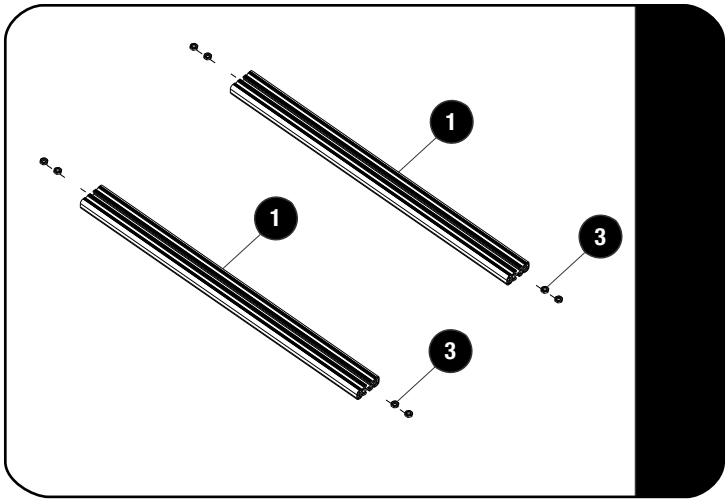

Slide four M8 Thin Nuts (Item 3) into each of the two Slats (Item 1) as shown.

2.2

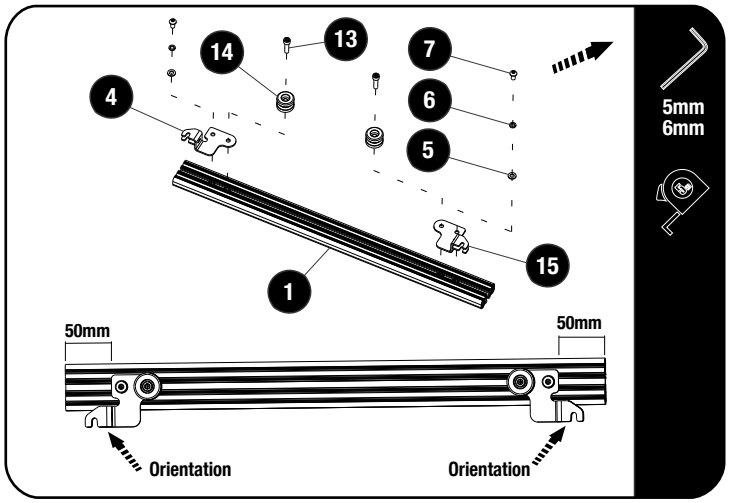

Assemble a RH Release Bracket (Item 4) and a LH Release Bracket (Item 15) with two Quick Release Bobbins (Item 14) to each Slat (Item 1) using the Thin Nuts inserted in 2.1, four M8 Flat Washers, four M8 Spring Washers, four M8x16 Button Head Screws and four M8x30 Cap Screws (Item 5, 6, 7 & 13)

Measure 50mm from each slat end for positioning of the Release Brackets and Release Feet.

Ensure the correct orientation for the Release Brackets (Item 4 & 5) on each slat as shown.

2.3

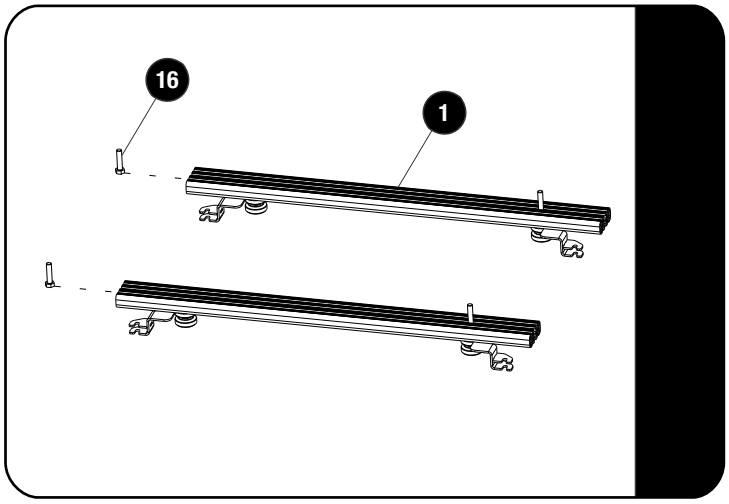

Turn the assembled slat over and slide four M8x35 Hex Head Bolts (Item 16) into the assembled slats as shown.

© 2022 FRONT RUNNER VEHICLE OUTFITTERS

2 FIT AND SECURE

2.4

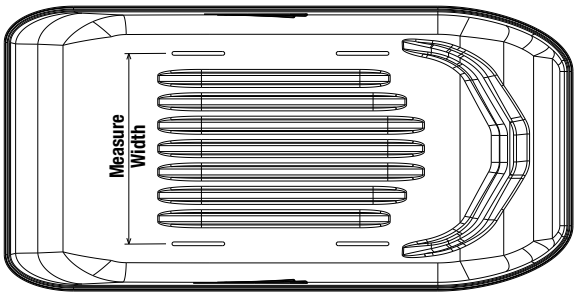

Bottom View

Measure the width between the centers of your cargo box mounting slots.

The position of the mounting slots of your cargo box, vary from make and model.

2.5

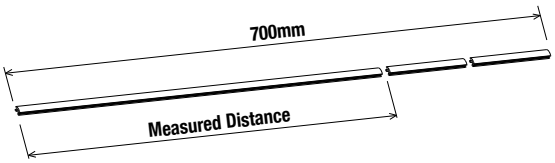

Using the measurement from 2.4, cut the T-Slot Rubber (Item 17), removing 20mm extra to allow for the bolts to pass through. Cut the remaining piece into 2 as shown.

2.6

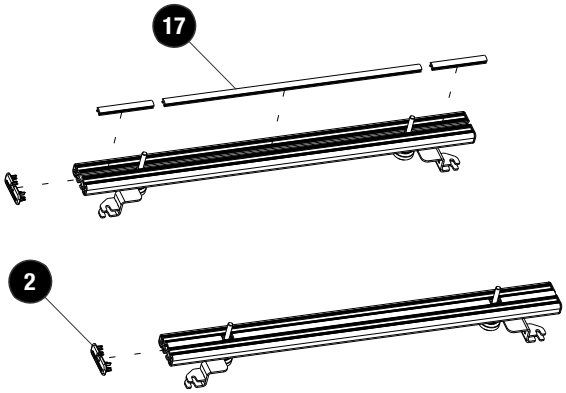

Insert the T-Slot Rubbers into the T-slot of each Slat with the M8x35 Hex Head Bolts (Item 16) positioned as shown.

Insert the four Slat End Caps (Item 2) into the left and right ends of the assembled Slats.

© 2022 FRONT RUNNER VEHICLE OUTFITTERS

2 FIT AND SECURE

2.7

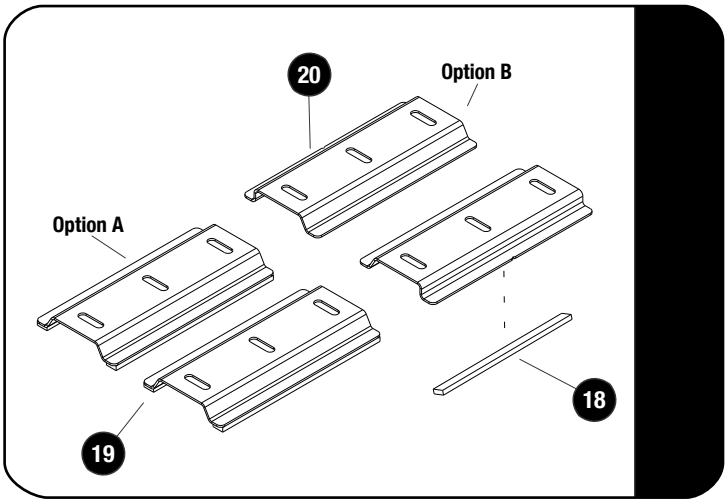

The use of the Box Brackets (Item 19 & 20) are dependant on the cargo box model, and bottom profile.

For the purpose of this fitment guide the Standard Brackets Option A (Item 19) will be used.

Remove the backing tape of the Self Adhesive Rubber Strips (Item 18) and secure it to the four Box Brackets Option A (Item 19) depending on the orientation it will be fixed at.

2.8

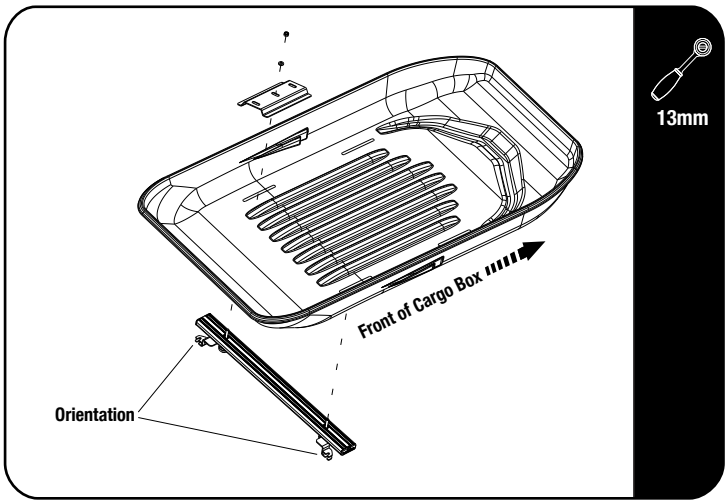

Loosely assemble the two assembled Slats inserting the M8x35 Hex Head Bolts (Item 16) through the bottom cargo box mounting slots, using the four Standard Brackets, four M8 Flat Washers and four M8 Nyloc Nuts (Item 20, 5 & 11).

The orientation and hole usage of the Brackets (Item 19) are model dependant.

Take note of the Release Bracket (Item 4 & 15) orientation before assembling to the bottom of the cargo box.

Tip: Open Box and stand vertically on suitable surface while fitting Slat and Bracket.

2.9

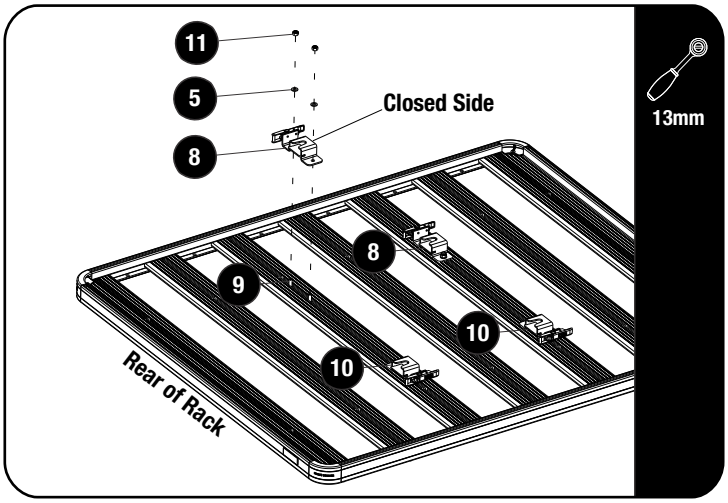

Taking into account the length and width of your cargo box, choose where you'd like to position it on the rack. This will determine where you need to fit the Catch Brackets (Item 8 & 10).

Slide four M8x20 Bolts (Item 9) into each relevant slat using the machined holes in the slat.

Loosely fit the Catch Brackets (Item 8 & 10) to the rack using M8x20 Hex Bolts, M8 Flat Washers and M8 Nyloc Nuts (Item 9, 5 & 11).

Note the position of the Catch Brackets and the Latch orientation. Make sure that the Closed Side of the Catch Brackets are facing toward the front of the rack.

© 2022 FRONT RUNNER VEHICLE OUTFITTERS

2 FIT AND SECURE

2.10

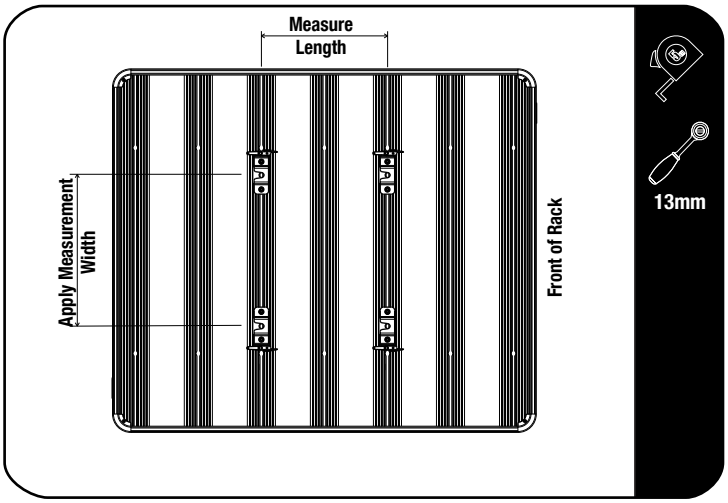

Apply the measurement from 2.4 to the centers of the Catch Brackets and fully tighten the Catch Brackets. Finish off by placing M8 Nut Caps (Item 12) on the M8 Nyloc Nuts.

Measure the length between the centers of the Catch brackets.

2.11

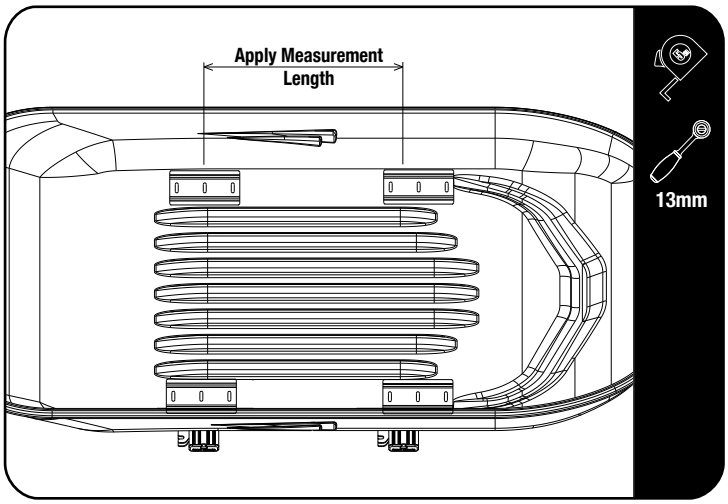

Apply the measurement from 2.10 to center the Narrow Box Brackets and fully tighten. Finish off by placing M8 Nut Caps (Item 12) on the M8 Nyloc Nuts.

2.12

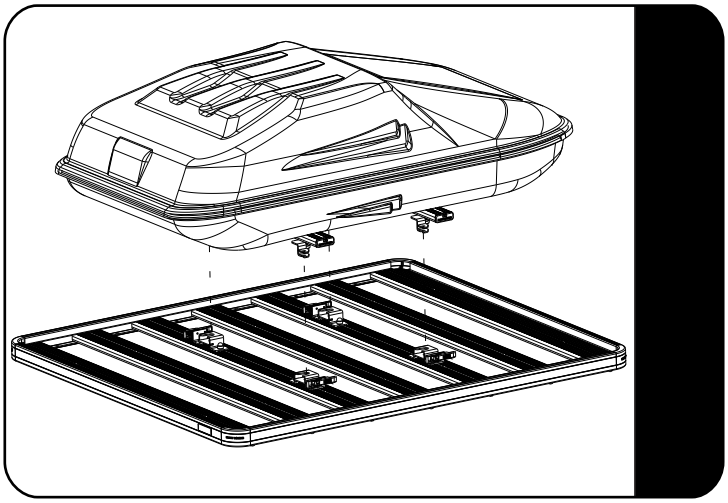

Lower the Cargo Box onto the rack making sure the Quick Release Feet align with the rack mounted Catch Brackets.

Push the cargo box forward so that the Quick Release Bobbins slide fully into the Catch Brackets.

Latch all 4 Latches to secure the cargo box into the brackets.

© 2022 FRONT RUNNER VEHICLE OUTFITTERS

3

FINISH

Congratulations! You did it. Take a step back and admire your work!

4

INSTALL OTHER VEHICLE AND RACK ACCESSORIES

Now's the time to visit your favorite Front Runner Dealer in person or online.

Be sure to tag us. We love to see our gear in action! #FrontRunnerOutfitters #BornToRoam

Share your adventures on:

© 2022 FRONT RUNNER VEHICLE OUTFITTERS