FRONT RUNNER
VEHICLE OUTFITTERS

RECOVERY DEVICE FLAT MOUNTING KIT

ENG

RRAC147

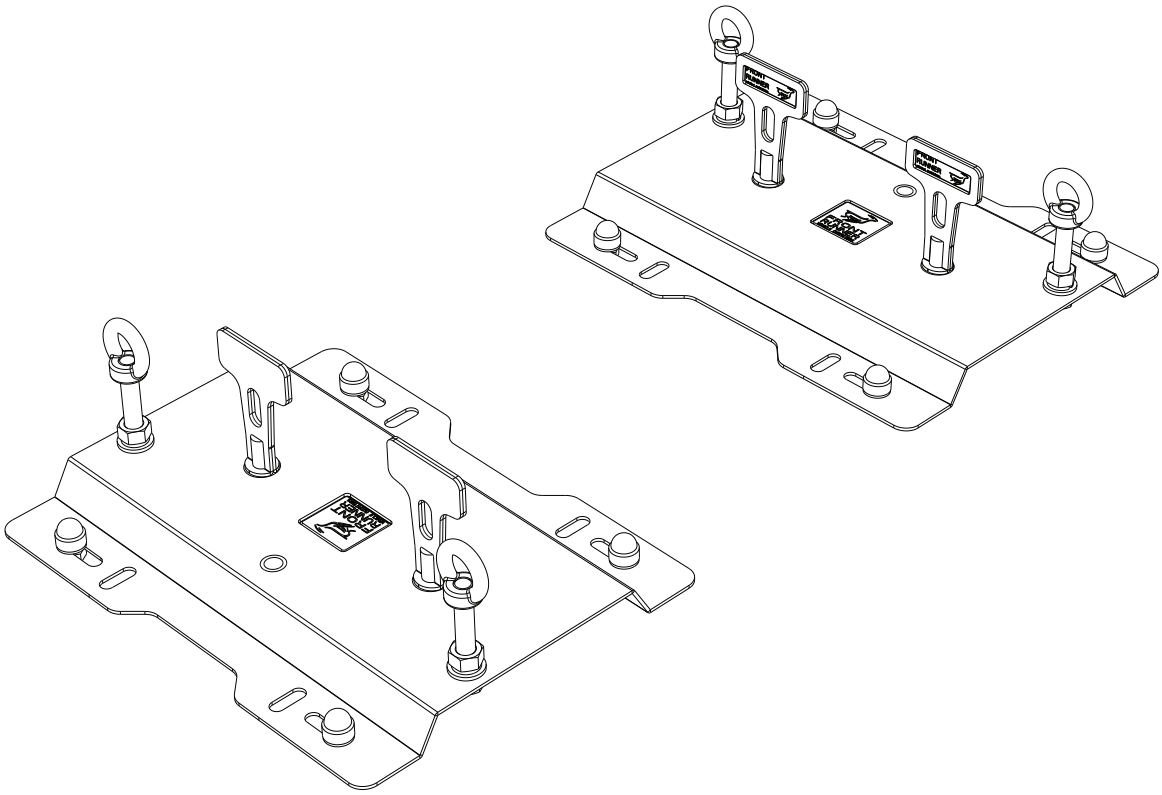

READ ME !

Thank you for purchasing the Front Runner Recovery Device Flat Mounting Kit.

Before you start, take a moment to familiarize yourself with the Fitting Instructions and the components received.

Refer to Page 2 for a list of all the components, quantities and tools required.

NOTE: Front Runner will not be responsible for any damage caused by the failure to install the product according to these instructions. Please call us if you have any questions about the installation of this product.

IMPORTANT WARNING!

FRONT RUNNER CAN NOT RECOMMEND A MAXIMUM LOAD CARRYING CAPACITY. PLEASE REFER TO YOUR VEHICLE MANUFACTURER'S RECOMMENDATIONS. IT IS CRITICAL THAT ALL FRONT RUNNER PRODUCTS BE PROPERLY AND SECURELY ASSEMBLED AND ATTACHED TO YOUR VEHICLE. IMPROPER ATTACHMENT COULD RESULT IN AN AUTOMOBILE ACCIDENT, AND COULD CAUSE SERIOUS BODILY INJURY OR DEATH. YOU ARE RESPONSIBLE FOR ASSEMBLING AND SECURING ALL FRONT RUNNER PRODUCTS TO YOUR VEHICLE. CHECKING THE ATTACHMENTS PRIOR TO USE, AND PERIODICALLY INSPECTING THE PRODUCTS FOR ADJUSTMENT, WEAR AND DAMAGE. THEREFORE YOU MUST READ AND UNDERSTAND ALL OF THE INSTRUCTIONS AND PRECAUTIONS SUPPLIED WITH YOUR FRONT RUNNER PRODUCT PRIOR TO INSTALLATION OR USE. IF YOU DO NOT UNDERSTAND ALL OF THE INSTRUCTIONS AND CAUTIONS, OR IF YOU HAVE NO MECHANICAL EXPERIENCE AND ARE NOT THOROUGHLY FAMILIAR WITH THE INSTALLATION PROCEDURES, YOU SHOULD HAVE THE PRODUCT INSTALLED BY A PROFESSIONAL INSTALLER OR OTHER QUALIFIED PERSONNEL.

© COPYRIGHT 2018 FRONT RUNNER VEHICLE OUTFITTERS

1 GET ORGANIZED

IN THE BOX

1	2 X	Recovery Mounting Plate
2	2 X	Mounting Key 70MM
3	2 X	Mounting Key 115mm
4	8 X	M8 x 16 x 1.6SS Flat Washer
5	8 X	M8 x 16 Hex Bolt
6	8 X	M8 Nyloc Nut
7	8 X	M8 Nut Cap
8	8 X	M10 x 21 x 1.2SS Flat Washer
9	4 X	M10 x 60 Hex Bolt
10	4 X	M10 x 100 Hex Bolt
11	4 X	M10 Spring Washer
12	4 X	M10 Hex Nut
13	4 X	M10 x 30 x 3SS Flat Washer
14	4 X	M10 Eye Nut

TOOLS NEEDED

13MM
17MM

17MM

FIGURE 1.1

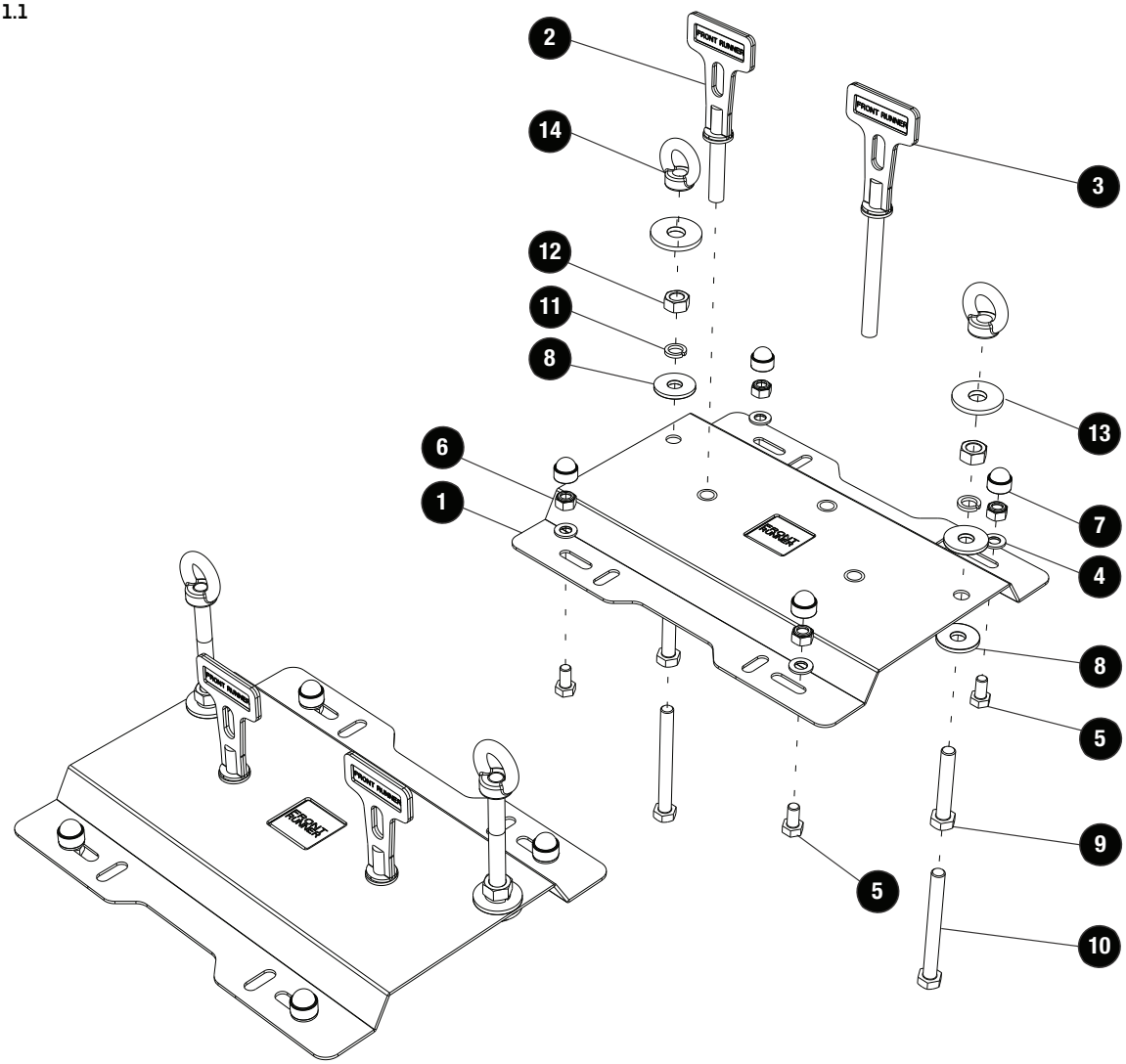

© COPYRIGHT 2018 FRONT RUNNER VEHICLE OUTFITTERS

2 PREPARATION

2.1

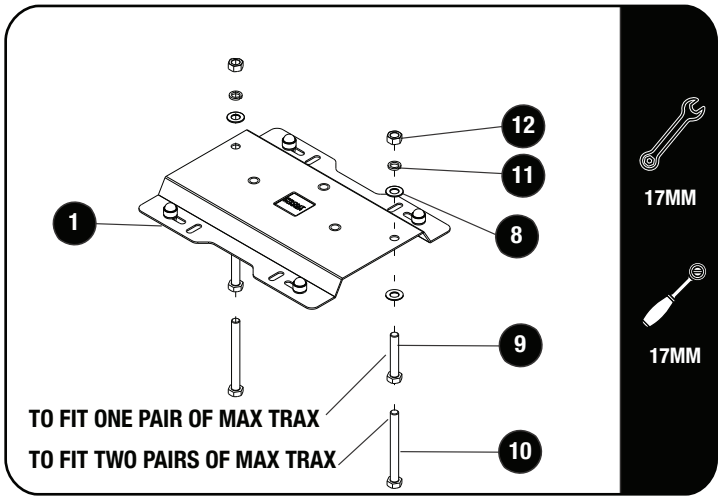

PREPARATION FOR MAX TRAX ONLY

Secure the provided M10 x 60 Hex Bolt or M10 x 100 Hex Bolt with M10 Flat Washer, M10 Spring Washer and M10 Hex Bolt (Items 9, 10, 8, 11 & 12) on both Recovery Mounting Plates (Item 1). As shown in 2.1

Max Trax Mounting Pins (SOLD SEPARATELY) can also be used.

2.2

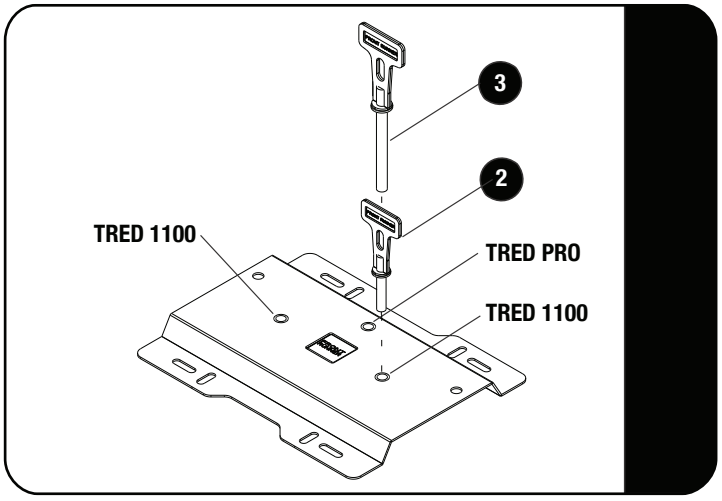

PREPARATION FOR TRED PRO / 1100 ONLY.

You will use one Mounting Key per bracket. For one pair of Treds use Mounting Key 2, and for two pairs use Mounting Key 3 once the Recovery Mounting Plates are secured.

2.3

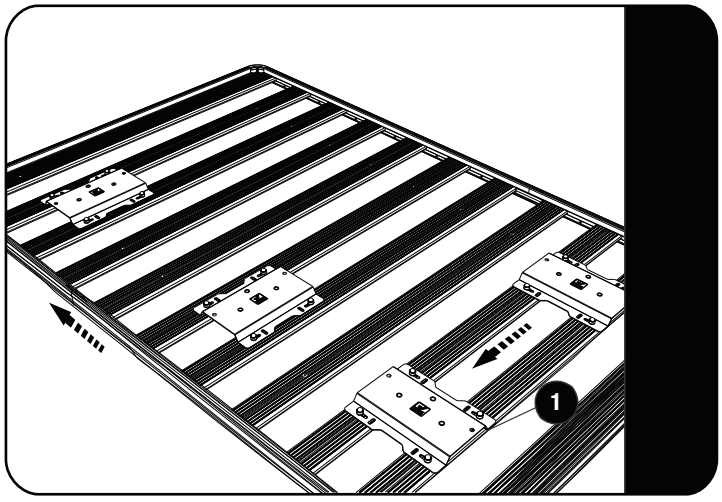

Decide which direction you would like your recovery tracks (North to South or East to West.)

Slide Four M8x16 Hex Bolts (Item 5) into each of the two slats when mounting East to West, or two M8x16 Hex Bolts (Item 5) into each of the four slats when mounting North to South.

Place the Recovery Mounting Plate (Item 1) over the bolts. Move the Recovery Mounting plate into the desired position by using the chosen Max Trac or Tred Pro / 1100 as a guide.

© COPYRIGHT 2018 FRONT RUNNER VEHICLE OUTFITTERS

3 FIT AND SECURE

3.1

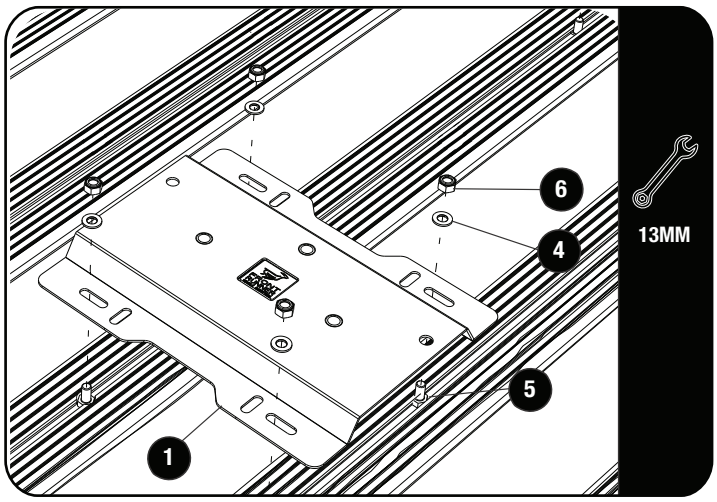

Loosely secure the Mounting Plate (Item 1) with four M8 Flat Washers and four M8 Nyloc Nuts (Items 4 & 6).

(Mounting Plate assembly for Tred Recovery Device shown in figure 3.1)

3.2

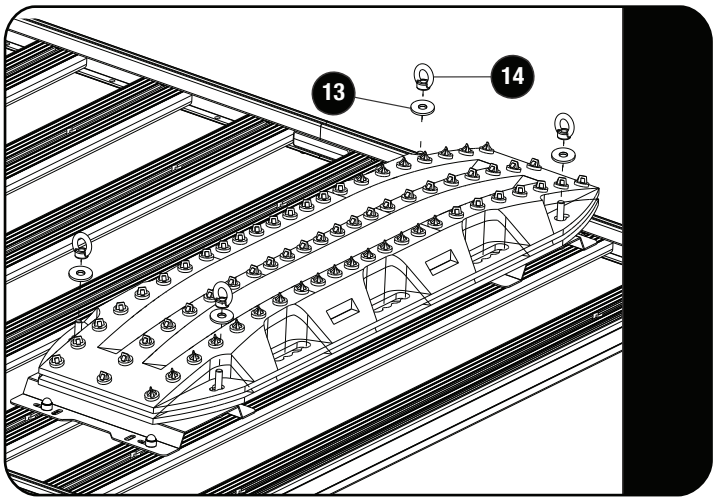

INSTALLATION FOR MAX TRAX ONLY

Place the Max Trax over the preassembled Mounting Plates to determine the spacing required. Fully tighten the Mounting Plates once the correct spacing has been achieved. Ref to figure 3.1

Place Nut Caps (Item 7) over Nyloc Nuts.

Use the provided M10 Eye Nuts and M10 x 30 x 3 SS Flat Washers (Items 13 & 14) to secure the Max Trax.

3.3

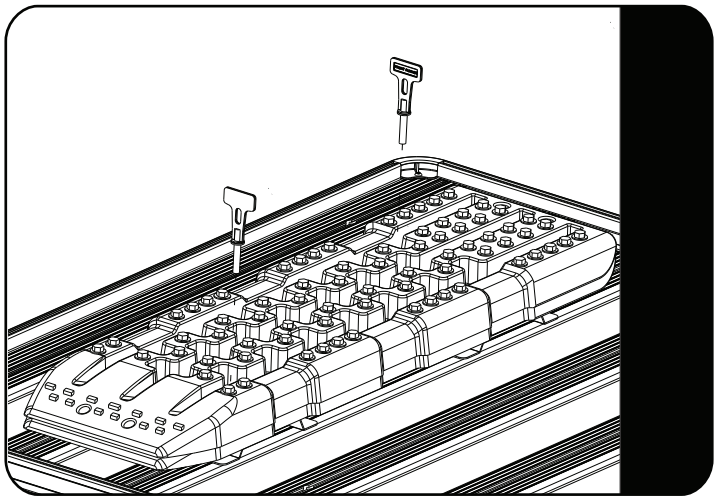

INSTALLATION FOR TRED PRO / 1100 ONLY

Using the Tred Tracs as a guide place them over the Mounting Plates to "determine" the spacing required.

Secure using one Mounting Key per Mounting Plate. Once the correct spacing has been achieved "fully" tighten the Mounting Plates. Ref to figure 3.1

© COPYRIGHT 2018 FRONT RUNNER VEHICLE OUTFITTERS

3 COMPLETION

3.1

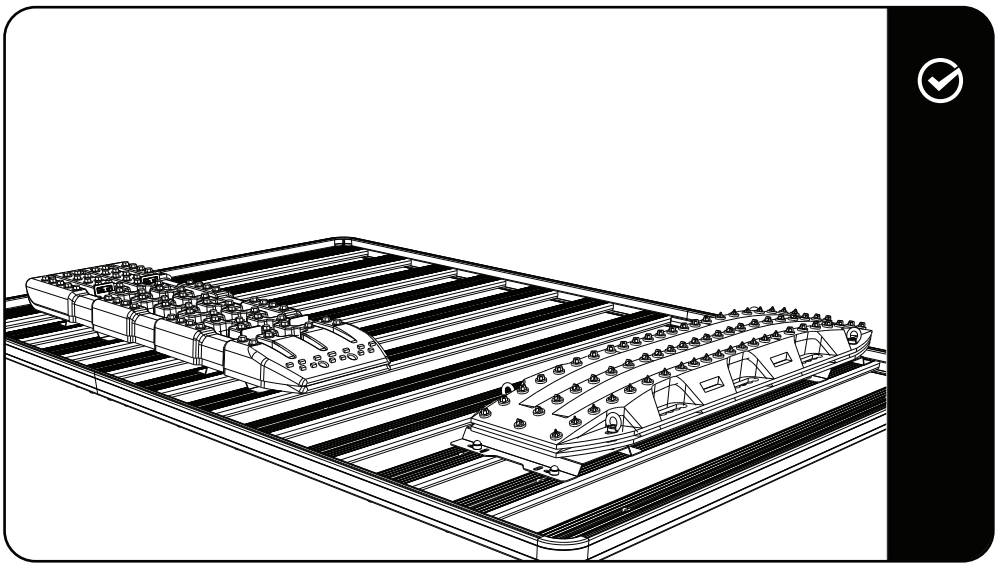

Congratulations! You did it. Take a step back and admire your work!

4 INSTALL OTHER VEHICLE AND RACK ACCESSORIES

Now's the time to visit your favorite Front Runner Dealer in person or Online.

Be sure to tag us. We love to see our gear in action! #FrontRunnerOutfitters #BornToRoam

Share your adventures on:

© COPYRIGHT 2018 FRONT RUNNER VEHICLE OUTFITTERS