FRONT RUNNER
VEHICLE OUTFITTERS

PRO SKI / SNOWBOARD & FISHING ROD CARRIER

ENG

RRAC123

10 min

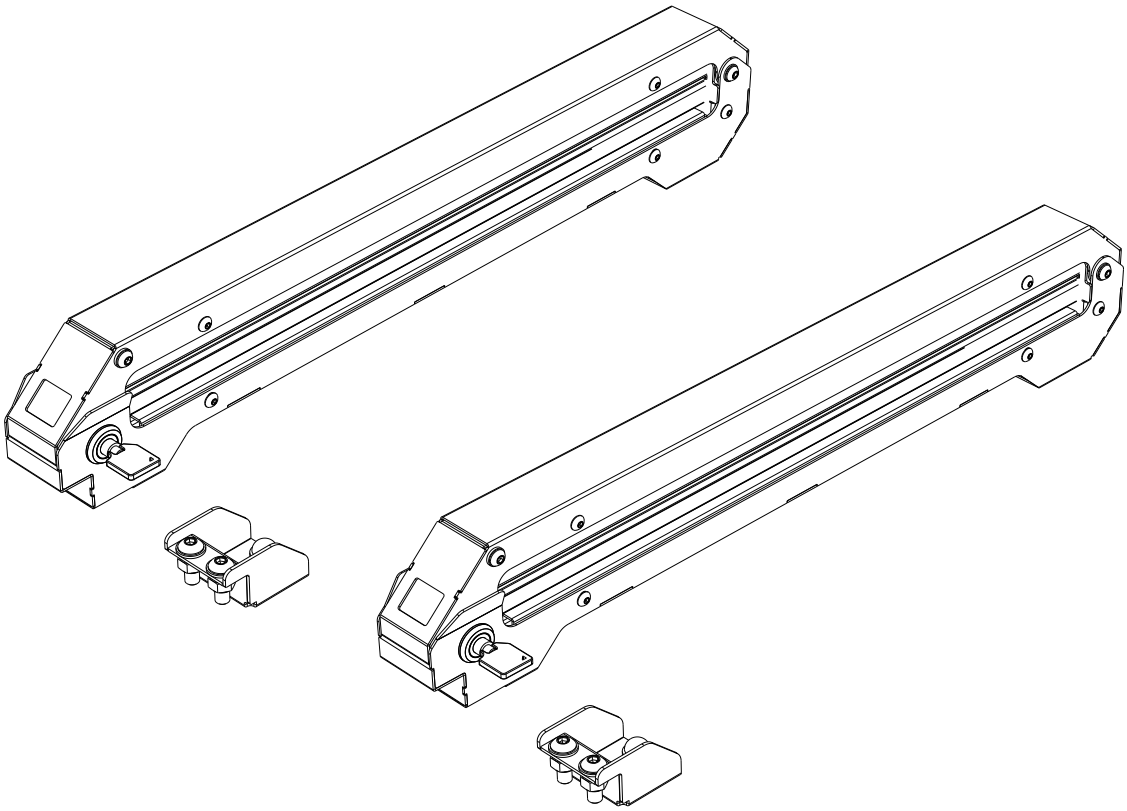

READ ME !

Thank you for purchasing a Front Runner Pro Ski / Snowboard & Fishing Rod Carrier.

Before you start, take a moment to familiarize yourself with the Fitting Instructions and the components received.

Refer to Page 2 for a list of all the components, quantities and tools required.

IMPORTANT WARNING!

IT IS CRITICAL THAT ALL FRONT RUNNER PRODUCTS BE PROPERLY AND SECURELY ASSEMBLED AND ATTACHED TO YOUR VEHICLE. IMPROPER ATTACHMENT COULD RESULT IN AN AUTOMOBILE ACCIDENT, AND COULD CAUSE SERIOUS BODILY INJURY OR DEATH. YOU ARE RESPONSIBLE FOR ASSEMBLING AND SECURING ALL FRONT RUNNER PRODUCTS TO YOUR VEHICLE. CHECKING THE ATTACHMENTS PRIOR TO USE, AND PERIODICALLY INSPECTING THE PRODUCTS FOR ADJUSTMENT, WEAR AND DAMAGE. THEREFORE YOU MUST READ AND UNDERSTAND ALL OF THE INSTRUCTIONS AND PRECAUTIONS SUPPLIED WITH YOUR FRONT RUNNER PRODUCT PRIOR TO INSTALLATION OR USE. IF YOU DO NOT UNDERSTAND ALL OF THE INSTRUCTIONS AND CAUTIONS, OR IF YOU HAVE NO MECHANICAL EXPERIENCE AND ARE NOT THOROUGHLY FAMILIAR WITH THE INSTALLATION PROCEDURES, YOU SHOULD HAVE THE PRODUCT INSTALLED BY A PROFESSIONAL INSTALLER OR OTHER QUALIFIED PERSONNEL.

© COPYRIGHT 2017 FRONT RUNNER VEHICLE OUTFITTERS

1 GET ORGANIZED

IN THE BOX

1	2 X	Carrier
2	2 X	Support Bracket
3	6 X	M8 x 16 Hex Bolt
4	14 X	M8 x 16 x 1.6SS Flat Washer
5	10 X	M8 Nyloc Nut
6	6 X	M8 Nut Cap
7	4 X	M8 x 25 Button Head

TOOLS NEEDED

FIGURE 1.1

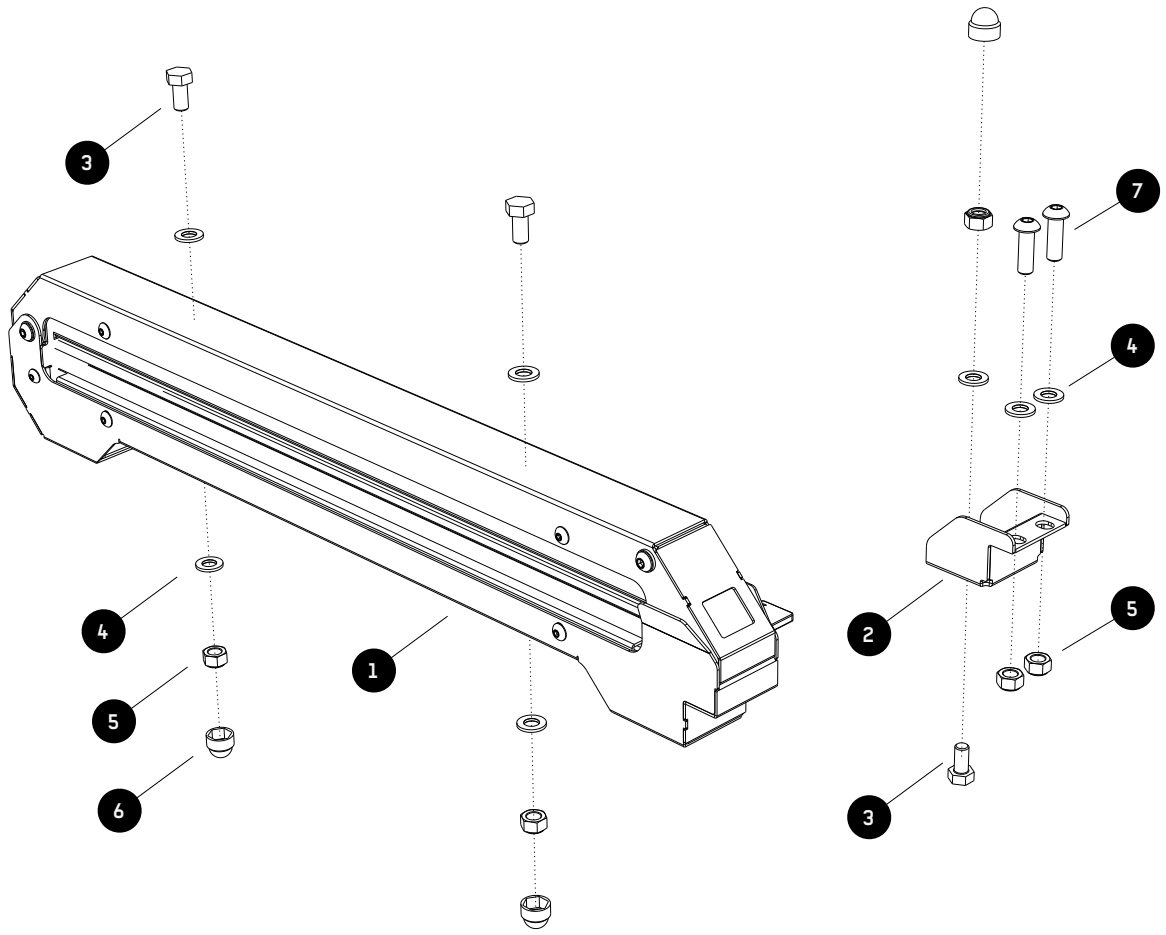

 © COPYRIGHT 2017 FRONT RUNNER VEHICLE OUTFITTERS

2 FIT AND SECURE CARRIER ON TOP OF A SLIMLINE II RACK

2.1

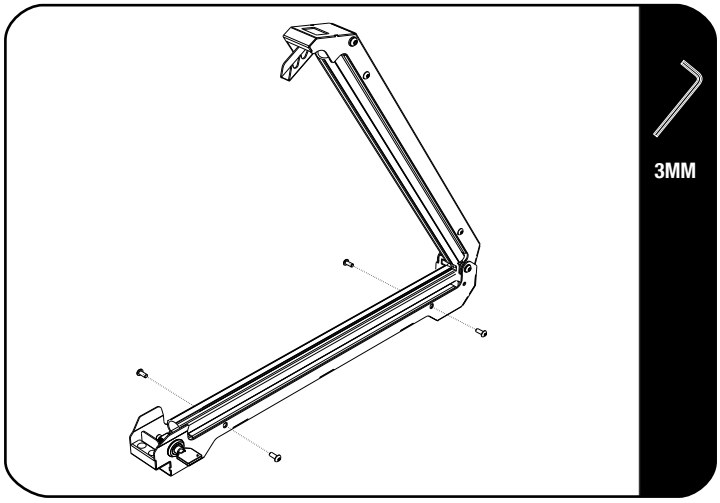

Unlock and open the Carrier (Item 1). Loosen and remove the four M5 Button Head Bolts in the base of the Carrier as shown.

2.2

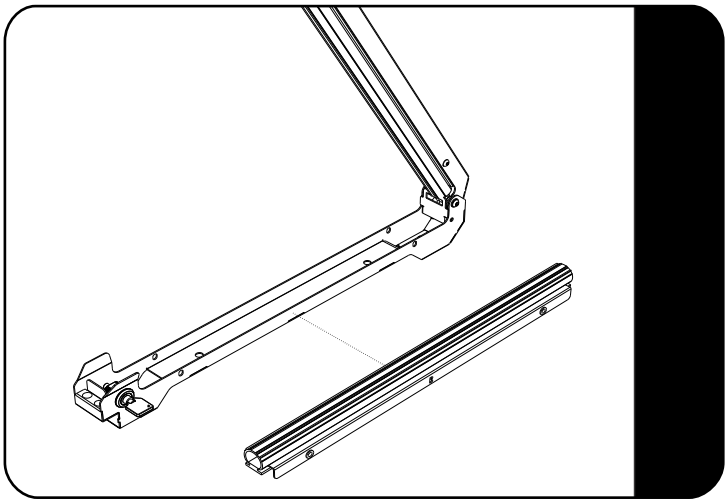

With the Carrier in the open position, remove the Rubber Extrusion and Clamping Plates as shown. Keep the Plates and Extrusion together as one unit when removing.

2.3

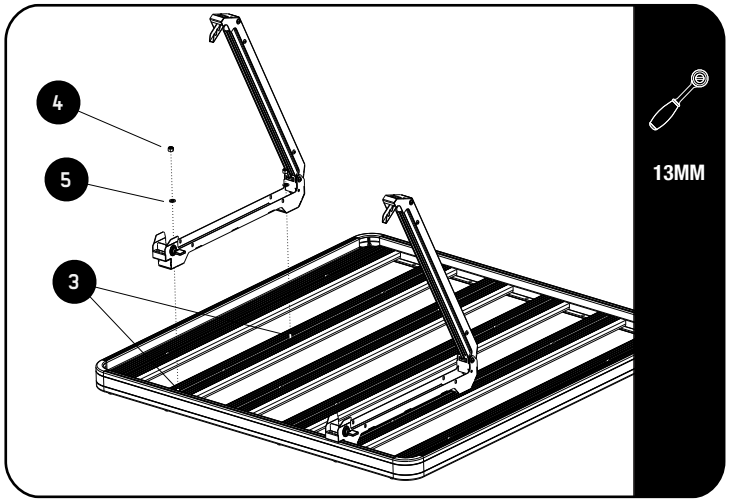

Decide where on the Rack you would like to mount the Carrier. Find the correct spacing best suited for the length of your Ski's / Snow Board or Fishing Rod. Slide the M8 x 16 x Hex Bolts (Item 3) into the T-slot of each of the two chosen Slats. Open the Carriers and place them onto the Rack, lining up the mounting holes found in the bottom of the Carrier with the Hex Bolts. Loosely fit the Carriers to the Rack using the M8 x 16 x 1.6SS Flat Washers and M8 Nyloc Nuts (Items 4 & 5). Slide the Carries up against the outer edge of the rack as shown and tighten.

Replace the Rubber Extrusion and Clamp Plates from Step 2.2

© COPYRIGHT 2017 FRONT RUNNER VEHICLE OUTFITTERS

3 FIT AND SECURE ON THE SIDE OF A SLIMLINE II RACK

3.1

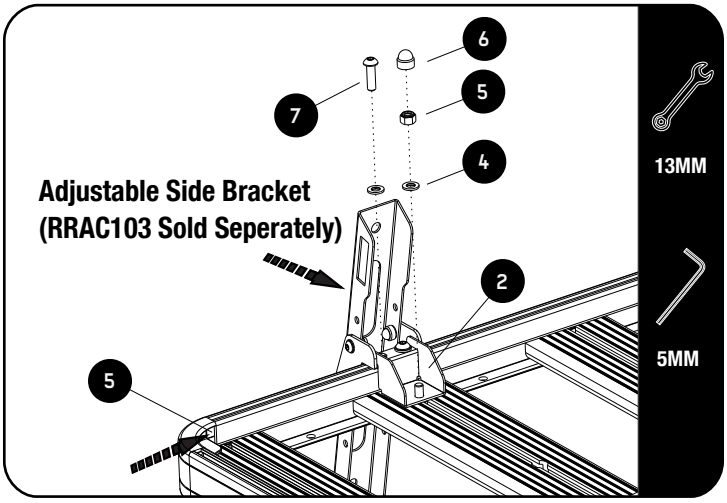

To mount the Carriers on the side of the Rack you will need the Adjustable Side Brackets (RRAC103 Sold Seperately).

Decide where on the Rack you would like to mount the Carrier. Find the correct spacing best suited for the length of your Ski's, Snow Board or Fishing Rod. Slide four M8 Nyloc Nuts (Item 5) into the Side Profile. Place the Adjustable Side Brackets on the Side Profile followed by the Support Bracket (Item 2). Secure by using M8 x 25 Button Head Bolts, M8 x 16 x 1.6SS Flat Washers and M8 Nyloc Nut (Items 7, 4 & 5) as Shown.

Finish by placing an M8 Nut Cap (Item 6) over the M8 Nyloc Nut.

3.2

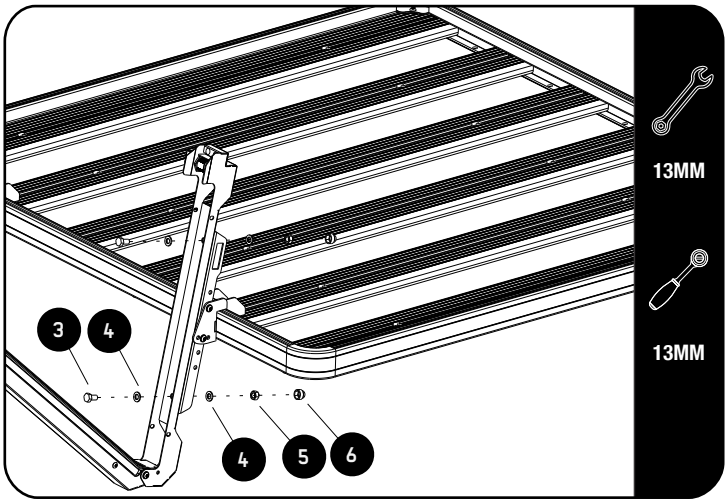

Remove the Rubber Extrusion from the Carriers. Refer to Step 2.1 & 2.2.

Secure the Carriers and the the Adjustable Side Brackets using M8 x 16 Hex Bolts, M8 x 16 x 1.6SS Flat Washers and M8 Nyloc Nuts (Item 3, 4 & 5) as shown.

Replace the Rubber Extrusion and Clamp Plates to the Carriers.

Finish by placing M8 Nut Caps (Item 6) over the M8 Nyloc Nuts.

3.3

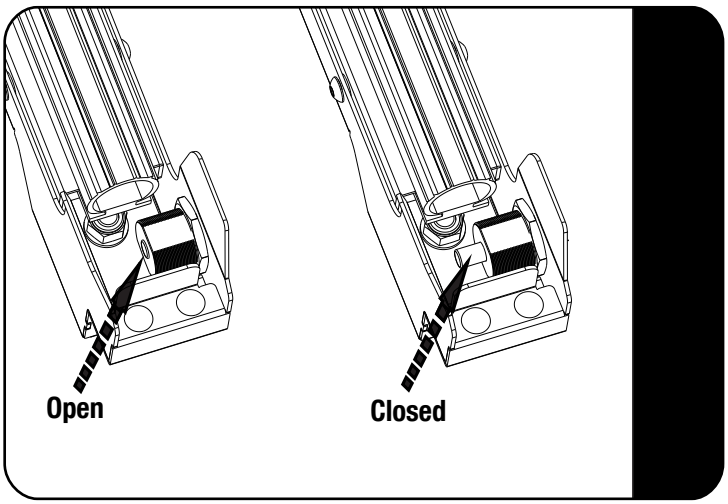

The Lock must be pushed into the Locked position when closing the Carrier in order for it to latch.

© COPYRIGHT 2017 FRONT RUNNER VEHICLE OUTFITTERS

4 COMPLETION

CARRIER ON TOP OF A SLIMLINE II RACK

4.1

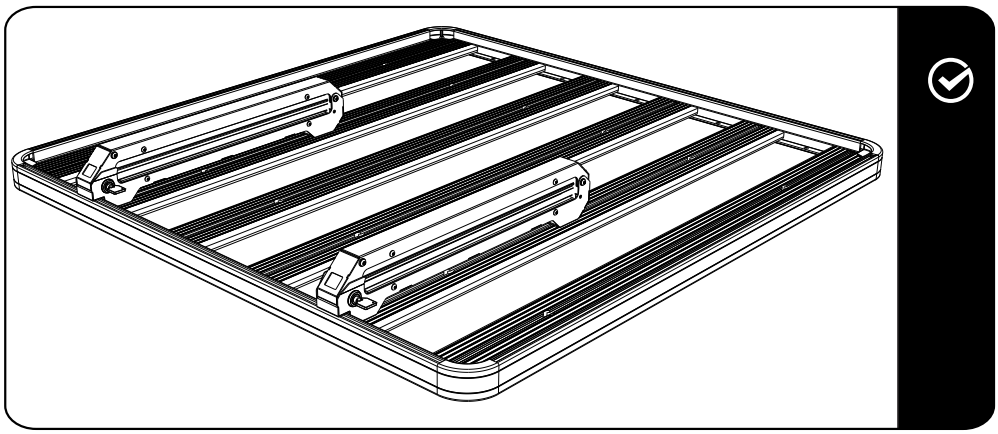

CARRIER SIDE MOUNT ON A SLIMLINE II RACK

4.2

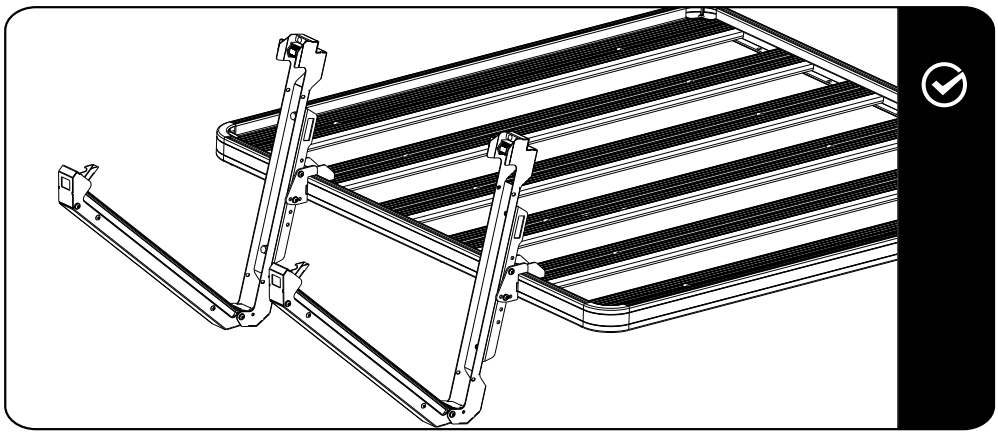

Congratulations! You did it. Take a step back and admire your work!

5

Front Runner will not be responsible for any damage caused by the failure to install the product according to these instructions. Please call us if you have any questions about the installation of this product.

6 INSTALL OTHER VEHICLE AND RACK ACCESSORIES

Now's the time to visit your favorite Front Runner Dealer in person or Online.

Be sure to tag us. We love to see our gear in action! #FrontRunnerOutfitters #BornToRoam

Share your adventures on:

© COPYRIGHT 2017 FRONT RUNNER VEHICLE OUTFITTERS