FRONT RUNNER
VEHICLE OUTFITTERS

THRU AXLE ADAPTER FOR FORK MOUNT BIKE CARRIER

ENG

RRAC119

5 min

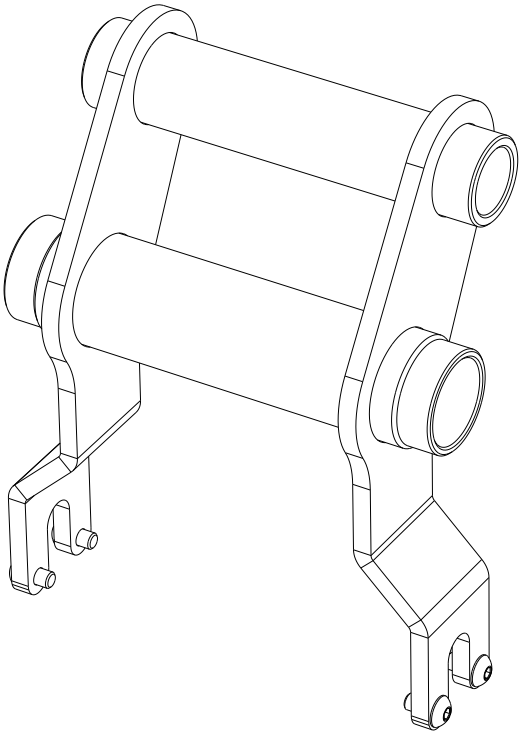

READ ME !

Thank you for purchasing a Front Runner Thru Axle Adapter for Fork Mount Bike Carriers.

Before you start, take a moment to familiarize yourself with the Fitting Instructions and the components received.

Refer to Page 2 for a list of all the components, quantities and tools required.

IMPORTANT WARNING!

IT IS CRITICAL THAT ALL FRONT RUNNER PRODUCTS BE PROPERLY AND SECURELY ASSEMBLED AND ATTACHED TO YOUR VEHICLE. IMPROPER ATTACHMENT COULD RESULT IN AN AUTOMOBILE ACCIDENT, AND COULD CAUSE SERIOUS BODILY INJURY OR DEATH. YOU ARE RESPONSIBLE FOR ASSEMBLING AND SECURING ALL FRONT RUNNER PRODUCTS TO YOUR VEHICLE. CHECKING THE ATTACHMENTS PRIOR TO USE, AND PERIODICALLY INSPECTING THE PRODUCTS FOR ADJUSTMENT, WEAR AND DAMAGE. THEREFORE YOU MUST READ AND UNDERSTAND ALL OF THE INSTRUCTIONS AND PRECAUTIONS SUPPLIED WITH YOUR FRONT RUNNER PRODUCT PRIOR TO INSTALLATION OR USE. IF YOU DO NOT UNDERSTAND ALL OF THE INSTRUCTIONS AND CAUTIONS, OR IF YOU HAVE NO MECHANICAL EXPERIENCE AND ARE NOT THOROUGHLY FAMILIAR WITH THE INSTALLATION PROCEDURES, YOU SHOULD HAVE THE PRODUCT INSTALLED BY A PROFESSIONAL INSTALLER OR OTHER QUALIFIED PERSONNEL.

© COPYRIGHT 2016 FRONT RUNNER VEHICLE OUTFITTERS

1 GET ORGANIZED

IN THE BOX		
1	1 X	Thru Axle Adapter
2	1 X	Boost Hub Insert

FIGURE 1.1

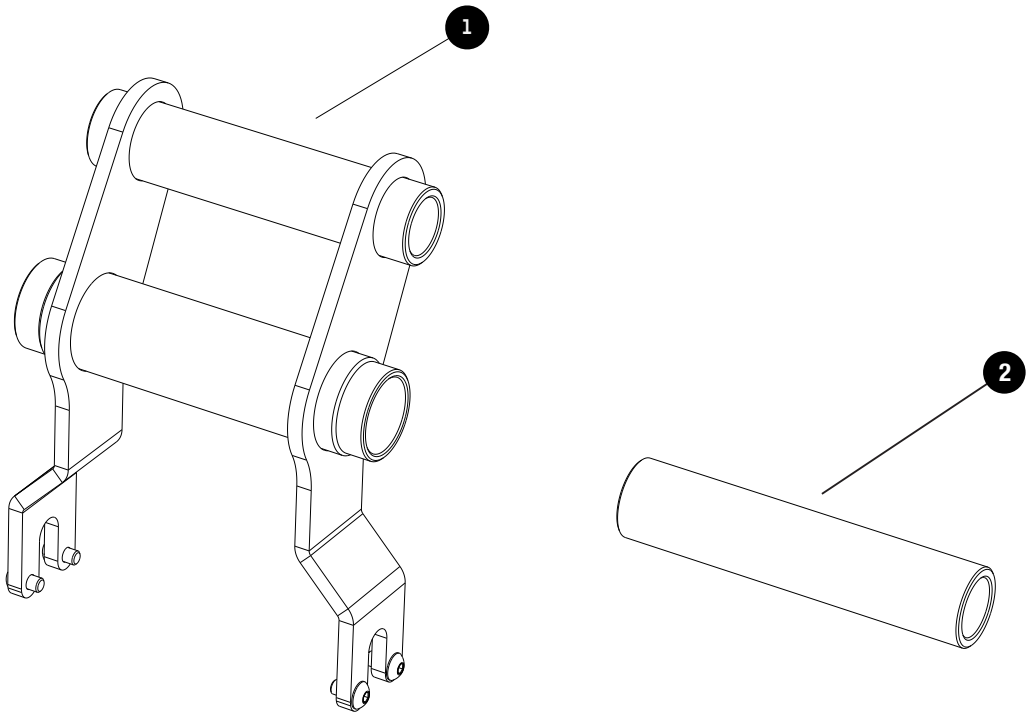

 © COPYRIGHT 2016 FRONT RUNNER VEHICLE OUTFITTERS

2 FIT AND SECURE

2.1

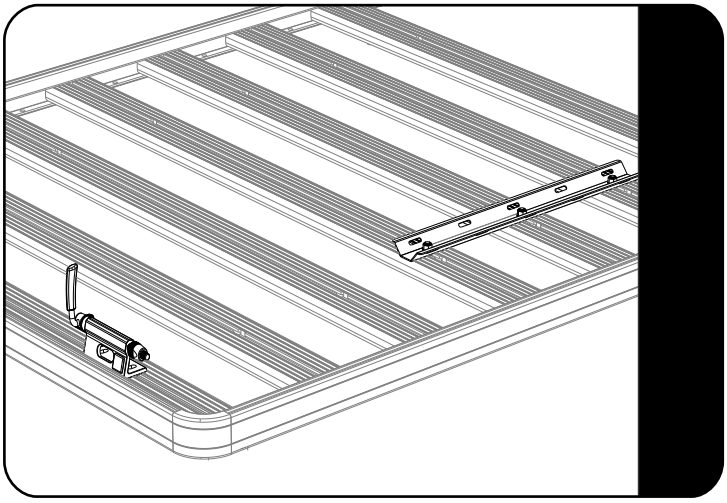

Fit RRAC040 to your Front Runner Roof Rack or Front Runner Load Bars.

***Please see RRAC040 fitment guide for details.**

2.2

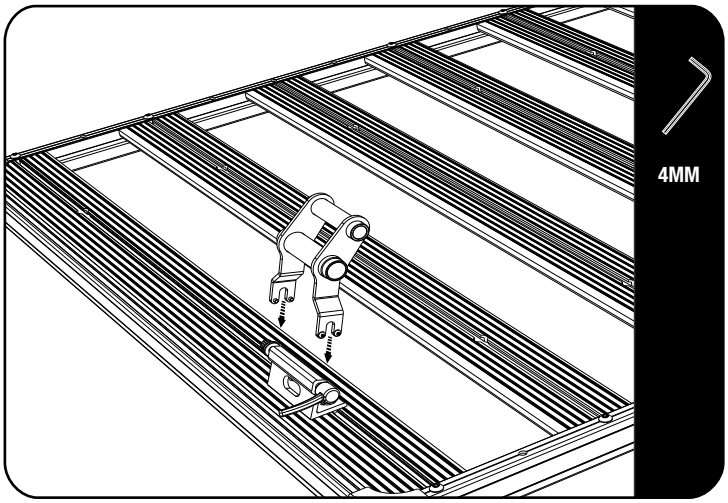

Loosen quick release on fork mount. Place Thru Axle Adapter onto fork mount. Adjust quick release accordingly and position Thru Axle Adapter to appropriate angle. Securely fasten quick release.

2.3

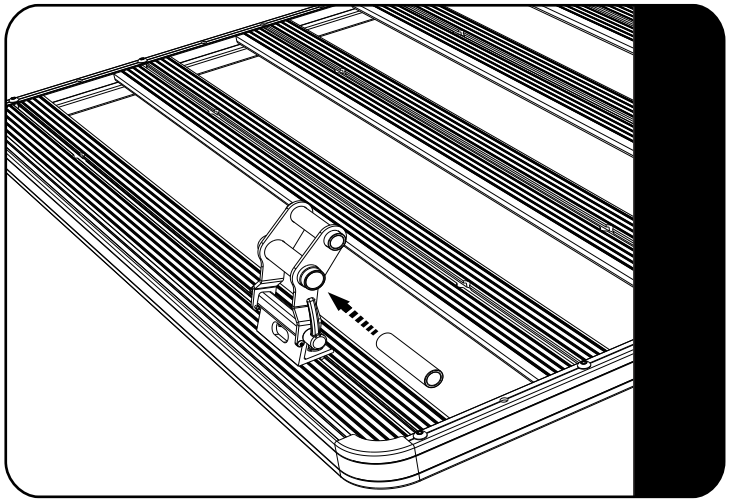

For fork & wheel sets fitted with Boost Hubs. Insert Boost Hub insert into 20mm tube.

2 FIT AND SECURE

2.4

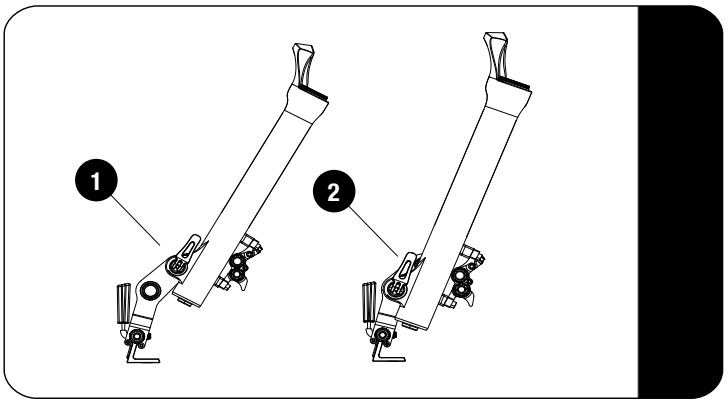

1 15mm Thru Axle position

2 20mm Thru Axle position
15mm Thru Axle with Boost Hub

3 COMPLETION

3.1

Congratulations! You did it. Take a step back and admire your work!

4 Front Runner will not be responsible for any damage caused by the failure to install the product according to these instructions. Please call us if you have any questions about the installation of this product.

5 INSTALL OTHER VEHICLE AND RACK ACCESSORIES

Now's the time to visit your favorite Front Runner Dealer in person or Online.

Be sure to tag us. We love to see our gear in action! #FrontRunnerOutfitters #BornToRoam

Share your adventures on:

© COPYRIGHT 2016 FRONT RUNNER VEHICLE OUTFITTERS