FRONT RUNNER
VEHICLE OUTFITTERS

CUB PACK RACK BRACKET

ENG

RRAC116

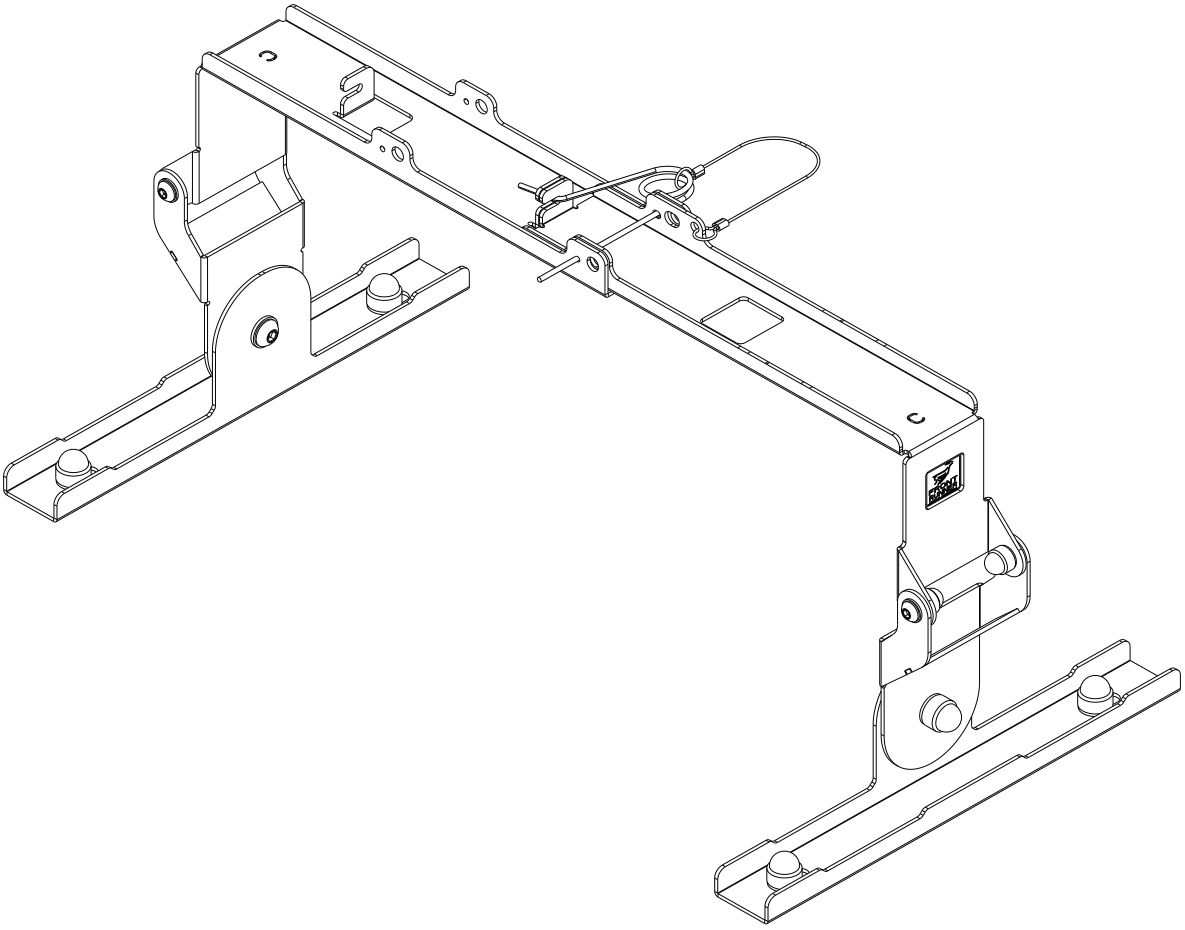

READ ME !

Thank you for purchasing a Front Runner Cub Pack Rack Bracket.

Before you start, take a moment to familiarize yourself with the Fitting Instructions and the components received.

Refer to Page 2 for a list of all the components, quantities and tools required.

IMPORTANT WARNING!

FRONT RUNNER CAN NOT RECOMMEND A MAXIMUM LOAD CARRYING CAPACITY. PLEASE REFER TO YOUR VEHICLE MANUFACTURER'S RECOMMENDATIONS. IT IS CRITICAL THAT ALL FRONT RUNNER PRODUCTS BE PROPERLY AND SECURELY ASSEMBLED AND ATTACHED TO YOUR VEHICLE. IMPROPER ATTACHMENT COULD RESULT IN AN AUTOMOBILE ACCIDENT, AND COULD CAUSE SERIOUS BODILY INJURY OR DEATH. YOU ARE RESPONSIBLE FOR ASSEMBLING AND SECURING ALL FRONT RUNNER PRODUCTS TO YOUR VEHICLE. CHECKING THE ATTACHMENTS PRIOR TO USE, AND PERIODICALLY INSPECTING THE PRODUCTS FOR ADJUSTMENT, WEAR AND DAMAGE. THEREFORE YOU MUST READ AND UNDERSTAND ALL OF THE INSTRUCTIONS AND PRECAUTIONS SUPPLIED WITH YOUR FRONT RUNNER PRODUCT PRIOR TO INSTALLATION OR USE. IF YOU DO NOT UNDERSTAND ALL OF THE INSTRUCTIONS AND CAUTIONS, OR IF YOU HAVE NO MECHANICAL EXPERIENCE AND ARE NOT THOROUGHLY FAMILIAR WITH THE INSTALLATION PROCEDURES, YOU SHOULD HAVE THE PRODUCT INSTALLED BY A PROFESSIONAL INSTALLER OR OTHER QUALIFIED PERSONNEL.

© COPYRIGHT 2017 FRONT RUNNER VEHICLE OUTFITTERS

1 GET ORGANIZED

IN THE BOX

1	2 X	Rack Mount Bracket
2	1 X	Bracket 1
3	1 X	Bracket 2
4	6 X	M8 Nut Cap
5	6 X	M8 Nyloc Nuts
6	12 X	M8 x 16 x 1.6SS Flat Washer
7	2 X	M8 x 20 Button Head
8	4 X	M8 x 16 Hex Bolt
9	2 X	T-Slot Rubber 450mm Long

TOOLS NEEDED

FIGURE 1.1

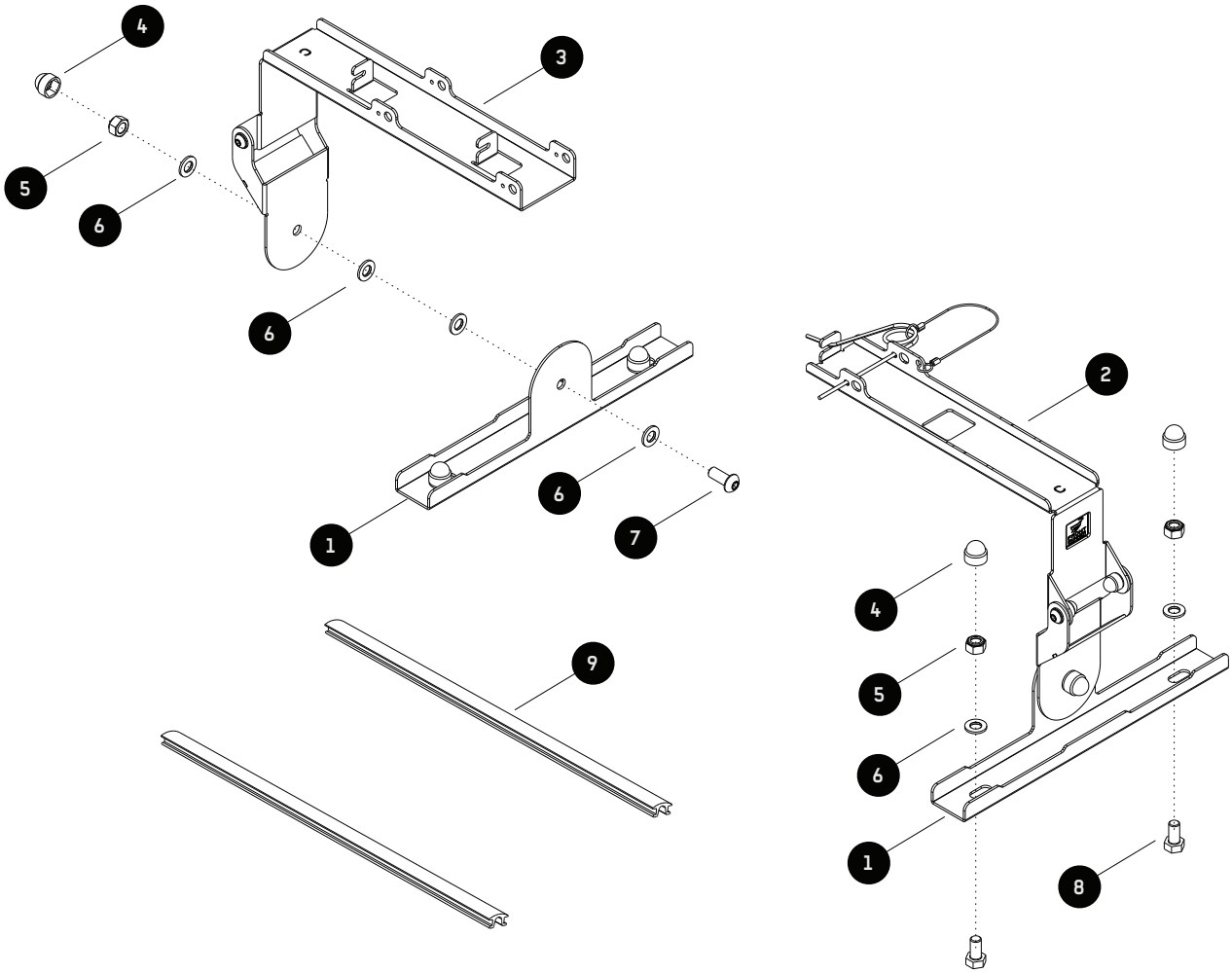

 © COPYRIGHT 2017 FRONT RUNNER VEHICLE OUTFITTERS

2 FIT AND SECURE

2.1

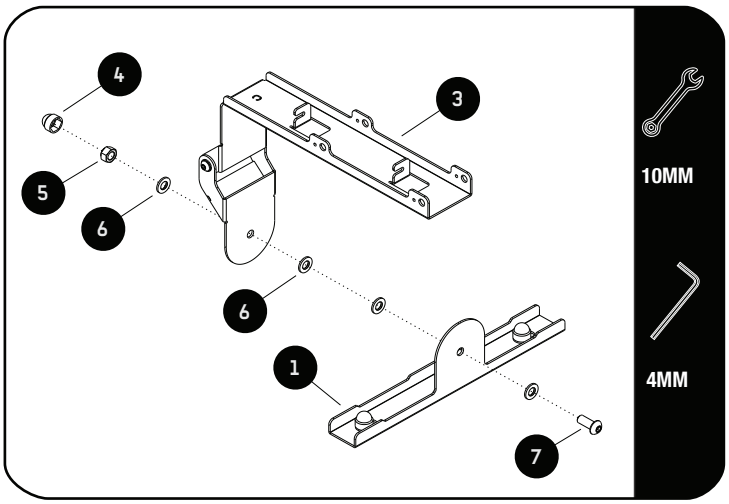

Assemble Locking Bracket 2 (Item 3) to the Rack Mount Bracket (Item 1) by using an M8 x 20 Button Head, M8 x 16 x 1.6SS Flat Washers and two M8 Nyloc Nuts (Items 5, 6 & 7) as shown.

Make sure to place two of the M8 x 16 x 1.5SS Flat Washer (Item 6) between Bracket 2 and the Rack Mount Bracket.

Do the same with Bracket 1 and the remaining Rack Mount Bracket.

Finish of by placing M8 Nut Caps (Item 4) over the M8 Nyloc Nuts (Item 5).

2.2

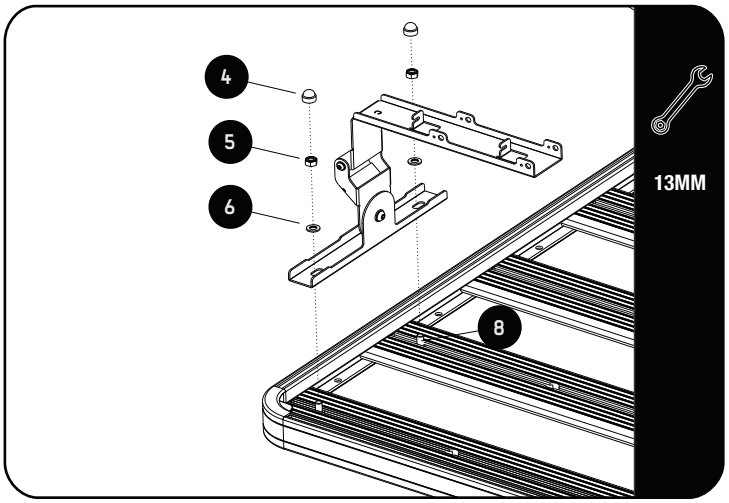

Choose where you want to position your Cub Pack on the Slimline II Rack.

Slide one M8 x 16 Hex Bolt (Item 8) into each of the slats closest to where you would like to position the Cub Pack.

Place one of the assembled Brackets from Step 2.1 over the M8 Hex Bolts and loosely secure to the rack using M8 Nyloc Nuts and M8 x 16 x 1.6SSFlat Washers (Items 5 & 6) as shown.

Do not tighten before Step 2.4 or 2.5.

2.3

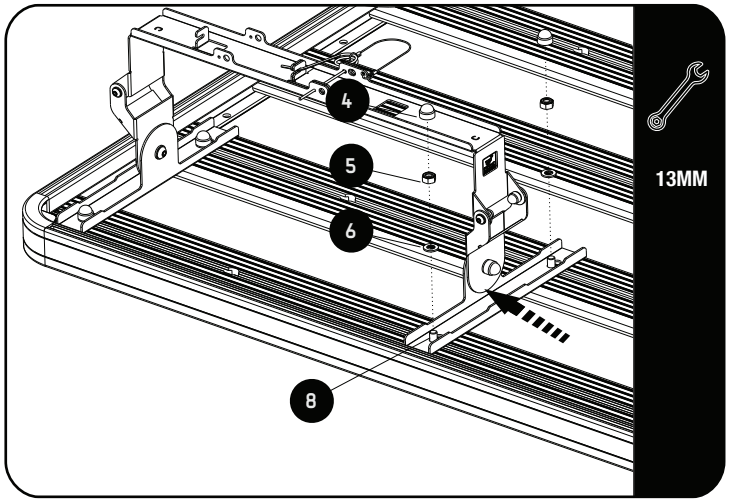

Repeat Step 2.2 to fit the remaining assembled Bracket to the slats as shown in Step 2.3.

Do not tighten yet.

© COPYRIGHT 2017 FRONT RUNNER VEHICLE OUTFITTERS

2 FIT AND SECURE

2.4

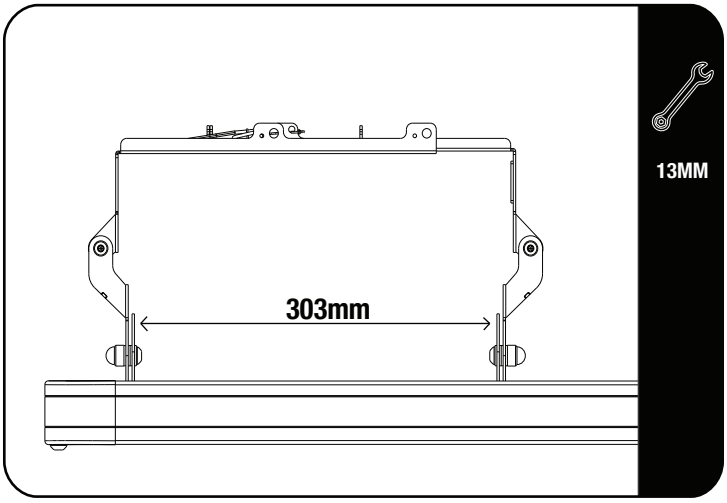

If you have chosen to position the Cub Pack length ways on the rack the brackets must be set 303mm apart as shown.

Fully tighten the fasteners and finish of by placing M8 Nut Caps (Item 4) over all the Nyloc Nuts.

2.5

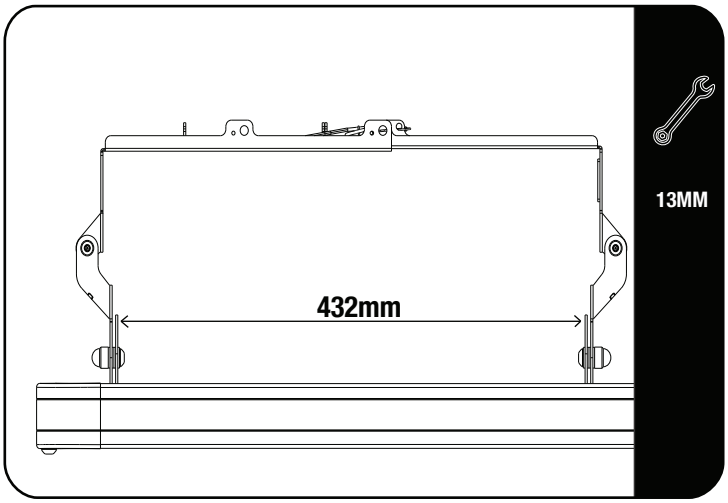

If you have chosen to position the Cub Pack width ways on the rack the brackets must be set 432mm apart as shown.

Fully tighten the fasteners and finish of by placing M8 Nut Caps (Item 4) over all four Nyloc Nuts (Item 11).

2.6

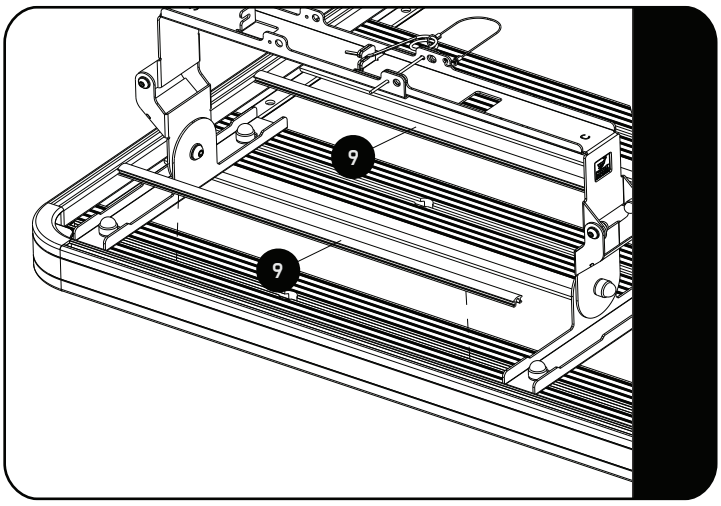

Insert two T-Slot Rubbers (Item 9) into the slats where the Cub Pack will be placed.

© COPYRIGHT 2017 FRONT RUNNER VEHICLE OUTFITTERS

2 FIT AND SECURE

2.7

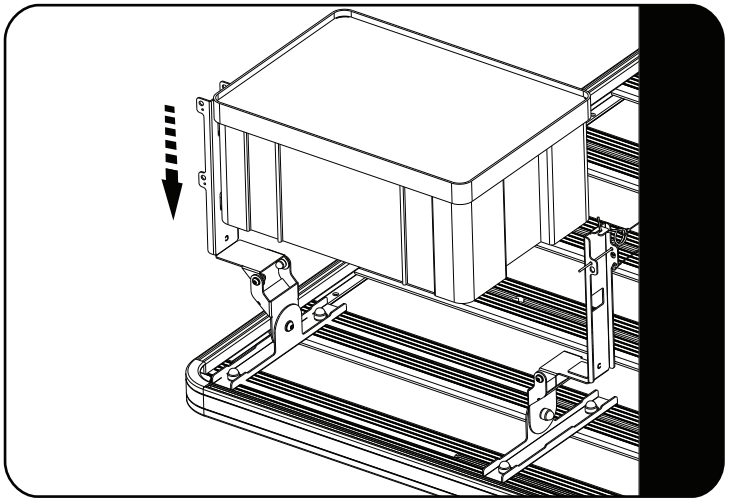

Open the Brackets and position the Cub Pack.

2.8

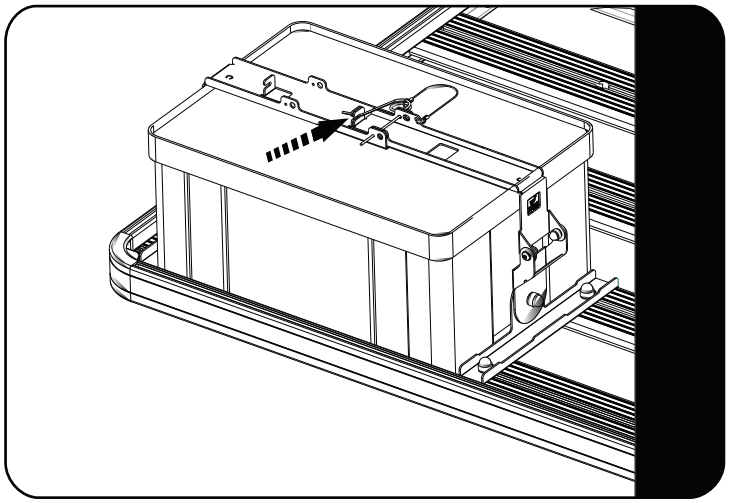

Close the Brackets, slide and clip the Securing Pin into place as shown.

You can also lock the brackets by using a Cable Lock through the hole indicated by the arrow.

© COPYRIGHT 2017 FRONT RUNNER VEHICLE OUTFITTERS

3 COMPLETION

3.1

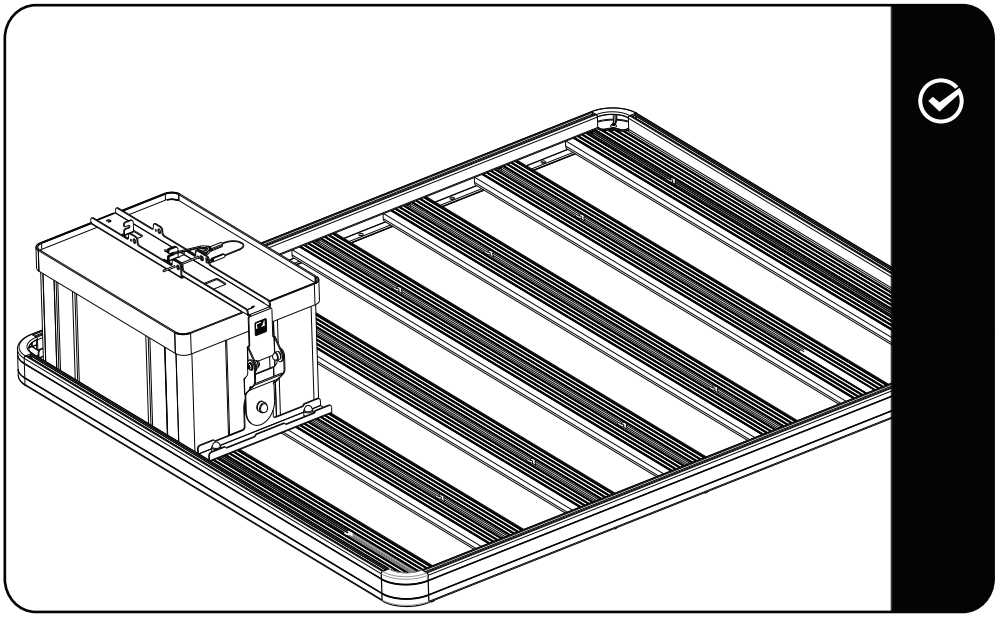

Congratulations! You did it. Take a step back and admire your work!

4 Front Runner will not be responsible for any damage caused by the failure to install the product according to these instructions. Please call us if you have any questions about the installation of this product.

5 INSTALL OTHER VEHICLE AND RACK ACCESSORIES

Now's the time to visit your favorite Front Runner Dealer in person or Online.

Be sure to tag us. We love to see our gear in action! #FrontRunnerOutfitters #BornToRoam

Share your adventures on:

© COPYRIGHT 2017 FRONT RUNNER VEHICLE OUTFITTERS