FRONT RUNNER

WIND FAIRING

LAND ROVER DISCOVERY LR3_LR4

ENG

RRAC102

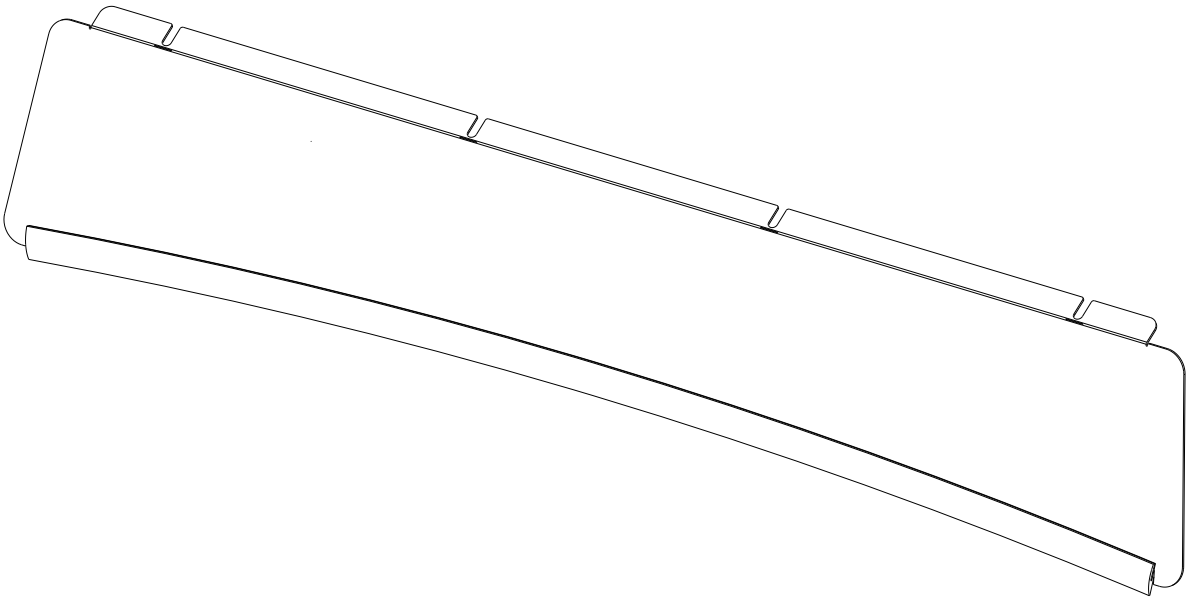

READ ME !

Thank you for purchasing a Front Runner Land Rover LR3_LR4 Wind Fairing.

Before you start, take a moment to familiarize yourself with the Fitting Instructions and the components received.

Refer to Page 2 for a list of all the components, quantities and tools required.

IMPORTANT WARNING!

IT IS CRITICAL THAT ALL FRONT RUNNER PRODUCTS BE PROPERLY AND SECURELY ASSEMBLED AND ATTACHED TO YOUR VEHICLE. IMPROPER ATTACHMENT COULD RESULT IN AN AUTOMOBILE ACCIDENT, AND COULD CAUSE SERIOUS BODILY INJURY OR DEATH. YOU ARE RESPONSIBLE FOR ASSEMBLING AND SECURING ALL FRONT RUNNER PRODUCTS TO YOUR VEHICLE, CHECKING THE ATTACHMENTS PRIOR TO USE, AND PERIODICALLY INSPECTING THE PRODUCTS FOR ADJUSTMENT, WEAR AND DAMAGE. THEREFORE, YOU MUST READ AND UNDERSTAND ALL OF THE INSTRUCTIONS AND PRECAUTIONS SUPPLIED WITH YOUR FRONT RUNNER PRODUCT PRIOR TO INSTALLATION OR USE. IF YOU DO NOT UNDERSTAND ALL OF THE INSTRUCTIONS AND CAUTIONS, OR IF YOU HAVE NO MECHANICAL EXPERIENCE AND ARE NOT THOROUGHLY FAMILIAR WITH THE INSTALLATION PROCEDURES, YOU SHOULD HAVE THE PRODUCT INSTALLED BY A PROFESSIONAL INSTALLER OR OTHER QUALIFIED PERSONNEL.

NOTE: Front Runner will not be responsible for any damage caused by the failure to install the product according to these instructions.
Please call us if you have any questions about the installation of this product.

© 2023 FRONT RUNNER VEHICLE OUTFITTERS

1 GET ORGANIZED

IN THE BOX

1	1 X	Land Rover Discovery LR3_LR4 Wind Fairing
2	4 X	M8 x 16 x 1 SS Flat Washer
3	4 X	M8 x 16 Button Head
4	4 X	M8 Nyloc Nut
5	4 X	Clear Protection Strip

TOOLS NEEDED

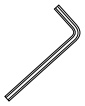

4mm
5mm

FIGURE 1.1

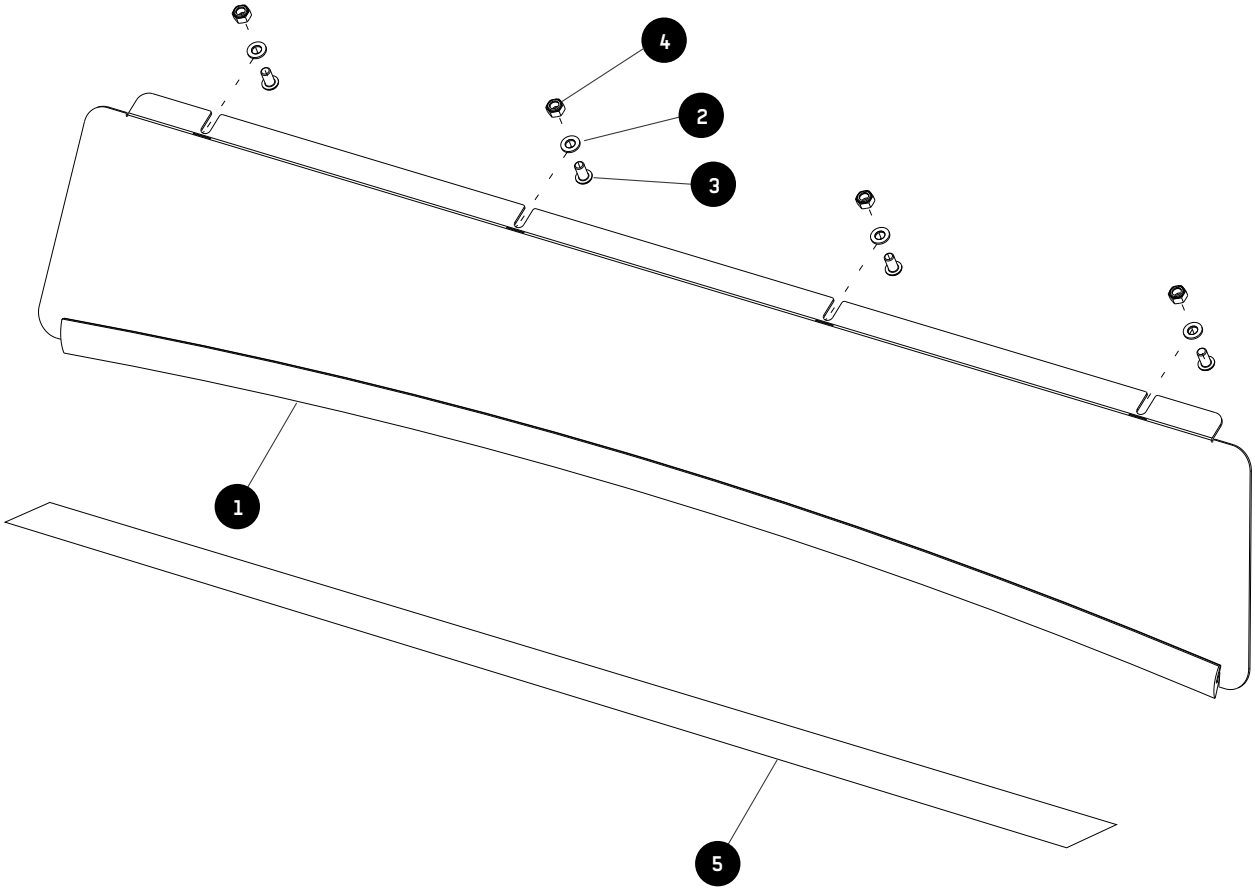

 © 2023 FRONT RUNNER VEHICLE OUTFITTERS

2 FIT AND SECURE

2.1

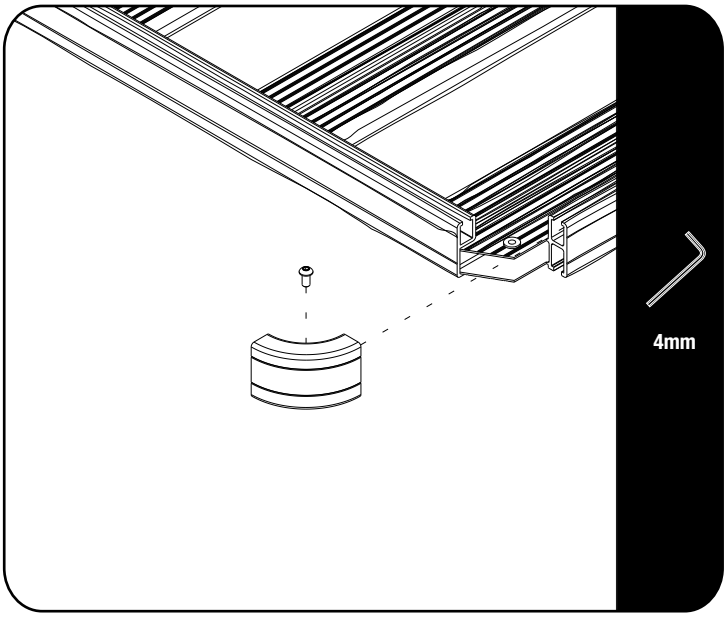

Start with removing the front right-hand side Corner piece with a 4mm Allen Key.

2.2

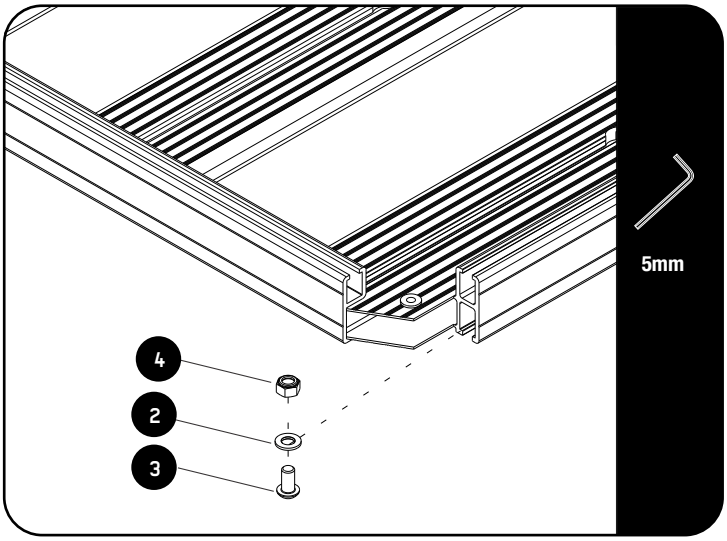

Slide 4 loosely assembled M8 Nyloc Nuts, M8 x 16 Button Head Bolts & M8 Flat Washers into the bottom T Slot as shown (Item 4, 3 & 2) .

Make sure the head of the M8 Button Head points downward as indicated in the image.

2.3

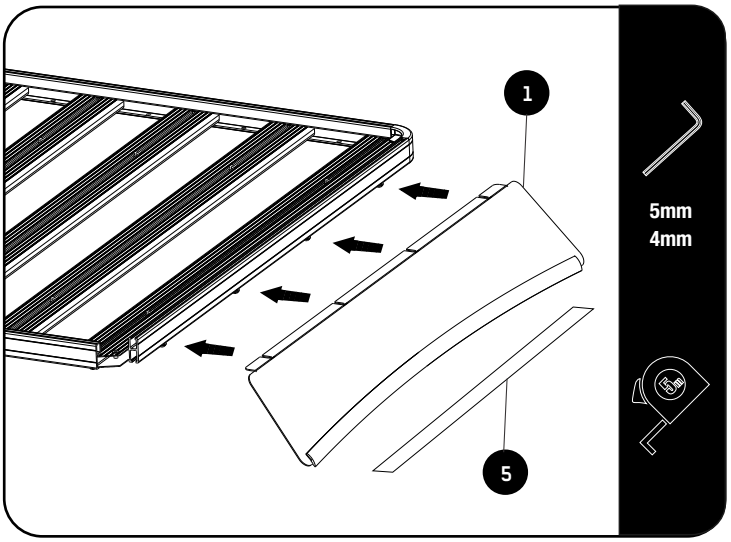

Position the bolts so that they are lined up with the Wind Fairing's slotted holes.

Slide the Wind Fairing into position under the roof rack making sure the M8 Flat washer is not between the roof rack and the Wind Fairing.

Use Clear Protection Strip (Item 5) included to protect paint work.

Center the wind fairing before fully tightening.

Replace the front right-hand side corner.

© 2023 FRONT RUNNER VEHICLE OUTFITTERS

3 FINISH

Congratulations! You did it. Take a step back and admire your work!

4 INSTALL OTHER VEHICLE AND RACK ACCESSORIES

Now's the time to visit your favorite Front Runner Dealer in person or online.

Be sure to tag us. We love to see our gear in action! #FrontRunnerOutfitters #BornToRoam

Share your adventures on:

© 2023 FRONT RUNNER VEHICLE OUTFITTERS