FRONT RUNNER

LED 40" LIGHT BAR BRACKETS

ENG

RRAC099

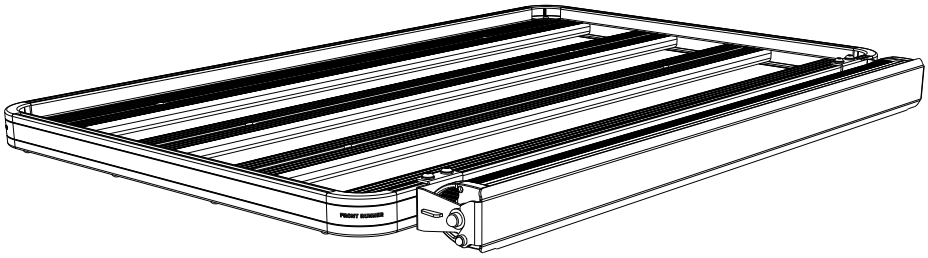

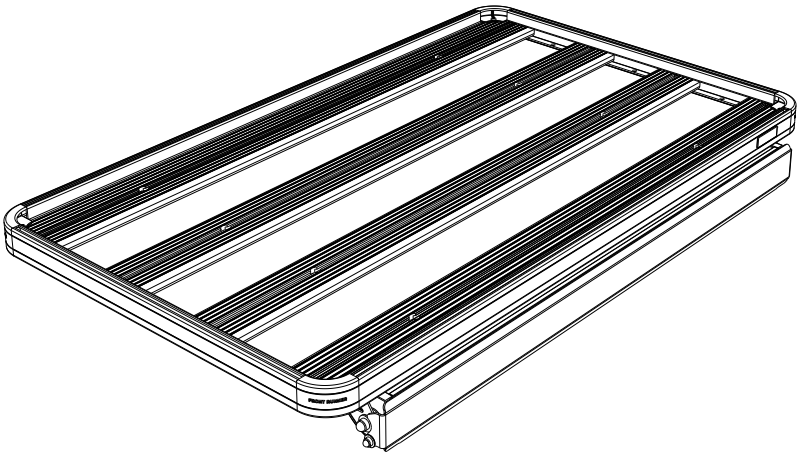

READ ME !

Thank you for purchasing a Front Runner 40" LED Light Bar Bracket.

Before you start, take a moment to familiarize yourself with the Fitting Instructions and the components received.

Refer to Page 2 for a list of all the components, quantities and tools required.

If you would like to mount your Light Bar under your Rack, refer to Section 3 and 4. You will need a minimum of 100mm clearance between the bottom of the Rack and the vehicle's roof in order to fit the LED Light Bar and Cover.
If you would like to mount your Light Bar in front of your Rack, refer to Section 1 and 2.

IMPORTANT WARNING!

IT IS CRITICAL THAT ALL FRONT RUNNER PRODUCTS BE PROPERLY AND SECURELY ASSEMBLED AND ATTACHED TO YOUR VEHICLE. IMPROPER ATTACHMENT COULD RESULT IN AN AUTOMOBILE ACCIDENT, AND COULD CAUSE SERIOUS BODILY INJURY OR DEATH. YOU ARE RESPONSIBLE FOR ASSEMBLING AND SECURING ALL FRONT RUNNER PRODUCTS TO YOUR VEHICLE, CHECKING THE ATTACHMENTS PRIOR TO USE, AND PERIODICALLY INSPECTING THE PRODUCTS FOR ADJUSTMENT, WEAR AND DAMAGE. THEREFORE, YOU MUST READ AND UNDERSTAND ALL OF THE INSTRUCTIONS AND PRECAUTIONS SUPPLIED WITH YOUR FRONT RUNNER PRODUCT PRIOR TO INSTALLATION OR USE. IF YOU DO NOT UNDERSTAND ALL OF THE INSTRUCTIONS AND CAUTIONS, OR IF YOU HAVE NO MECHANICAL EXPERIENCE AND ARE NOT THOROUGHLY FAMILIAR WITH THE INSTALLATION PROCEDURES, YOU SHOULD HAVE THE PRODUCT INSTALLED BY A PROFESSIONAL INSTALLER OR OTHER QUALIFIED PERSONNEL.

NOTE: Front Runner will not be responsible for any damage caused by the failure to install the product according to these instructions.
Please call us if you have any questions about the installation of this product.

 © 2019 FRONT RUNNER VEHICLE OUTFITTERS

1 GET ORGANIZED FOR FRONT OF RACK MOUNTING

IN THE BOX

1	6 X	M8 x 20 Button Head Bolt
2	1 X	Front Cover
3	2 X	Front Rack Bracket 1LH & 1RH
4	8 X	M8 x 16 x 1.6SS Flat Washer
5	6 X	M8 Nyloc Nut
6	2 X	M8 x 24.5 x 3 Flat Washer
7	2 X	M8 SS Spring Washer
8	2 X	M8 x 25 Hex Bolt
9	2 X	M8 Nut Cap
10	2 X	M6 Nut Cap
11	2 X	M6 Nyloc Nut
12	4 X	M6 x 12 x 1SS Flat Washer
13	4 X	M8 x 19 x 2 Flat Washer
14	1 X	40" LED Light Bar (Included with RRAC101)

TOOLS NEEDED

FIGURE 1.1

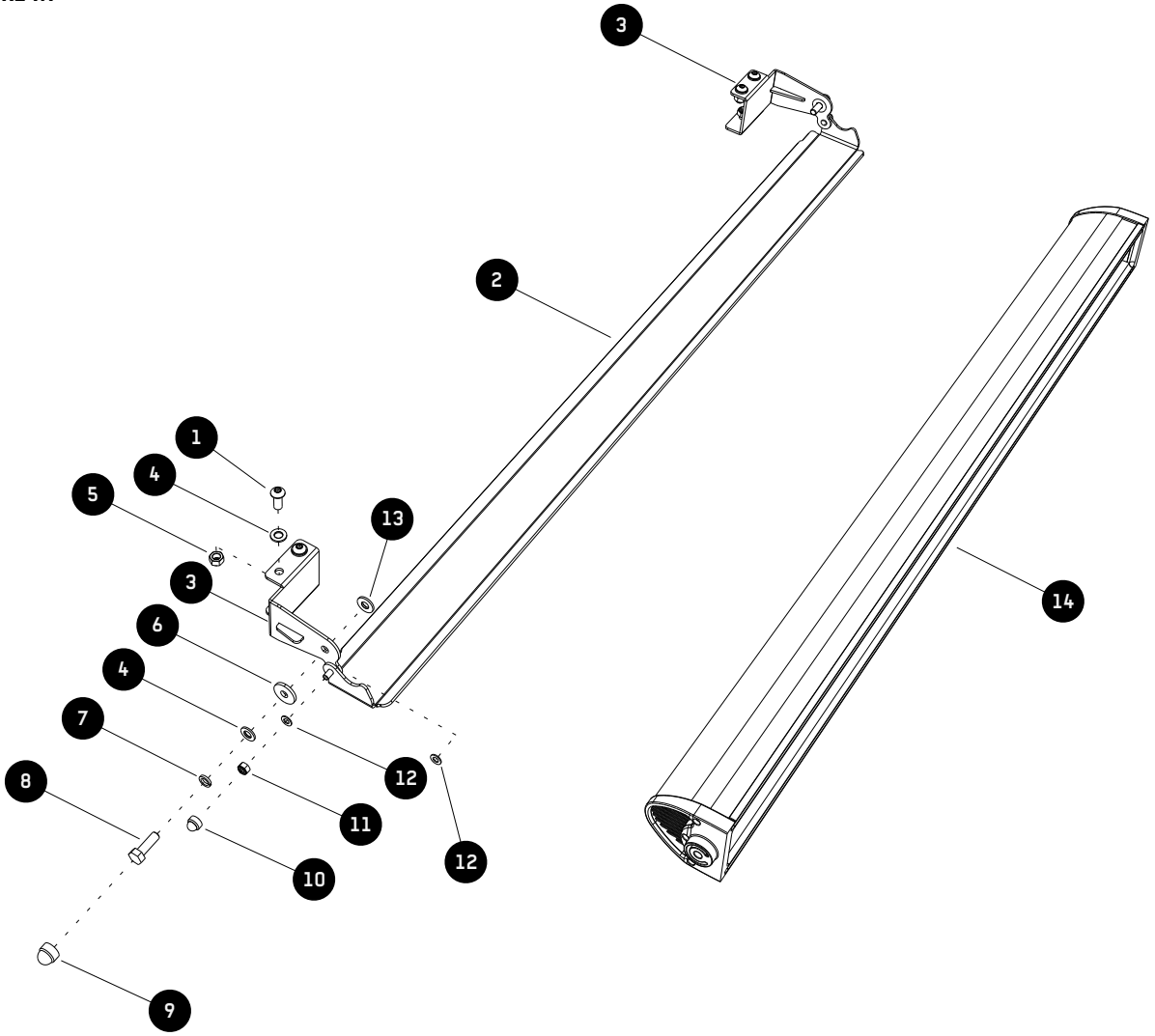

© 2019 FRONT RUNNER VEHICLE OUTFITTERS

2 GET ORGANIZED FOR UNDER RACK MOUNTING

IN THE BOX

1	4 X	M8 x 20 Hex Bolt
2	2 X	Mounting Bracket
3	4 X	M8 x 16 x 1.6Ss Flat Washer
4	4 X	M8 Nyloc Nut
5	6 X	M8 Nut Cap
6	1 X	Front Cover
7	2 X	M8 x 24.5 Flat Washer
8	2 X	M8 SS Spring Washer
9	2 X	M8 x 25 Hex Bolt
10	2 X	M6 Nut Cap
11	2 X	M6 Nyloc Nut
12	4 X	M6 X 12 X 1SS Flat Washer
13	4 X	M8 x 19 x 2 Flat Washer
14	1 X	40" LED Light Bar (Supplied with RRAC101)

TOOLS NEEDED

FIGURE 2.1

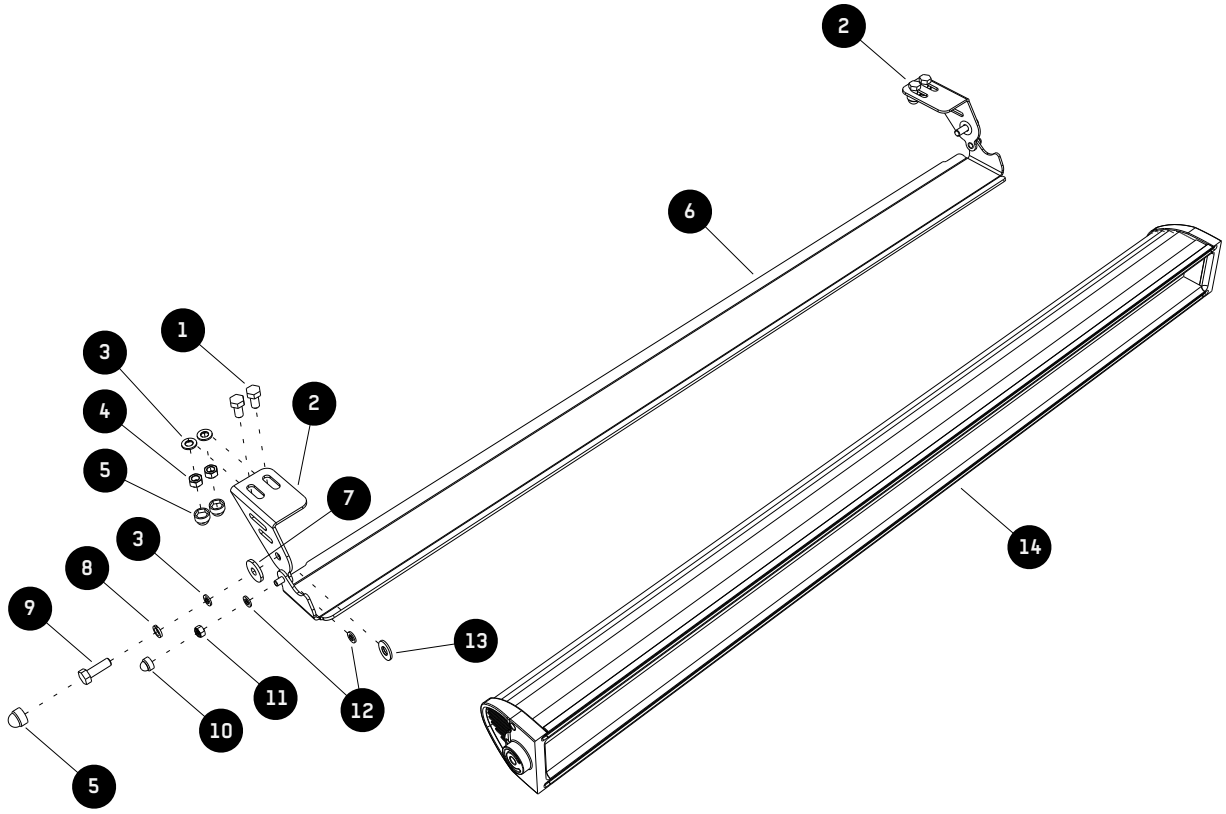

 © 2019 FRONT RUNNER VEHICLE OUTFITTERS

3 FIT AND SECURE THE LIGHT BAR - FRONT MOUNT

3.1

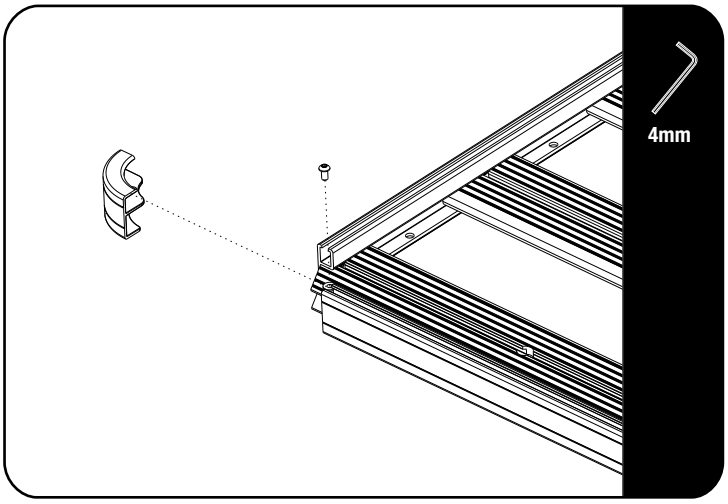

Remove the front right hand side corner piece of the Rack.

3.2

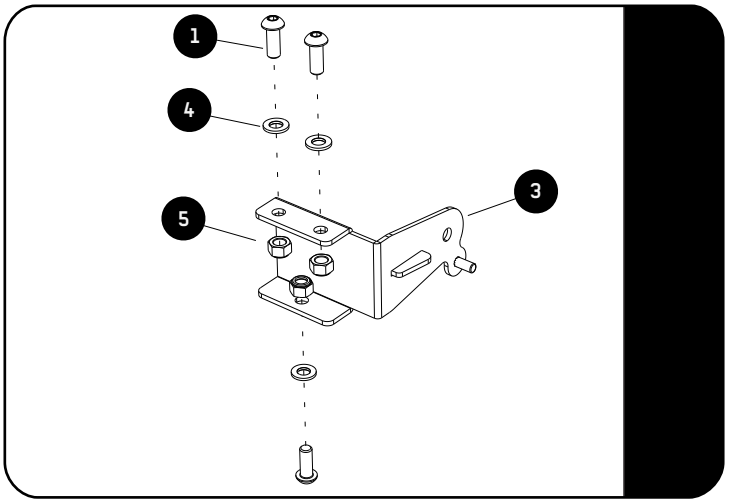

Assemble the left and right Front Mounting Brackets (Item 3) the M8 x 20 Button Head Bolts, M8 x 16 x 1.6SS Flat Washers and M8 Nyloc Nuts (Items 1, 4 & 5) as shown.

Make sure that the tab for the Light Cover points downward.

3.3

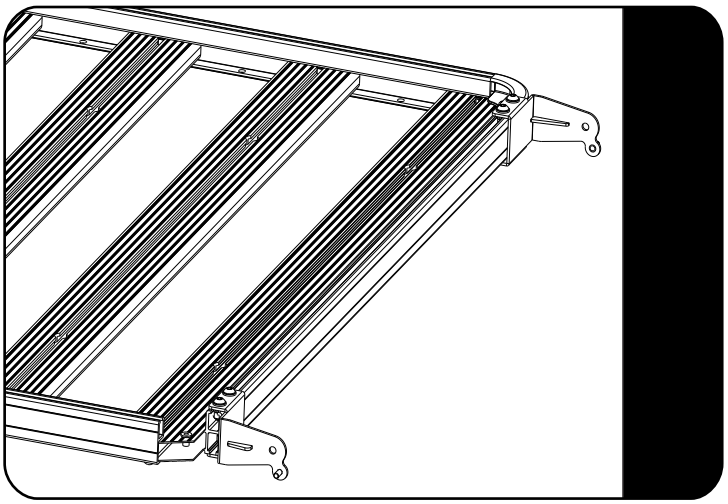

Slide the both Front Mount Brackets into the Combined Slat as shown.

© 2019 FRONT RUNNER VEHICLE OUTFITTERS

3 FIT AND SECURE THE LIGHT BAR - FRONT MOUNT

3.4

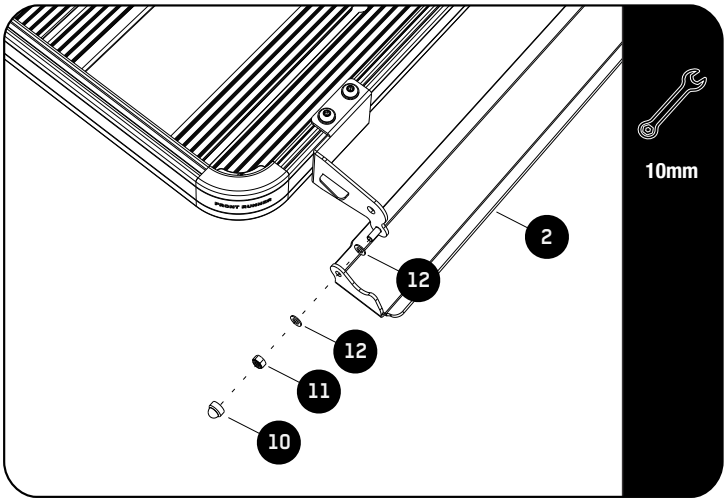

Fasten the Front Cover (Item 2) to the two Mounting Brackets using the four M6 Flat Washers and two M6 Nyloc Nuts (Items 12 & 11). The Front Cover should still be able to rotate after fastening, but should not open on its own.

3.5

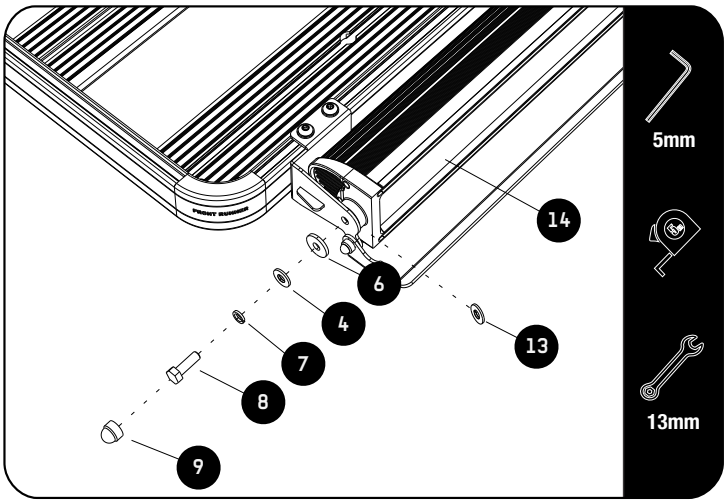

Test fit the Light Bar between the two brackets. If there is a gap between the light and the brackets use Item 13 to fill the gap. This will prevent the Light Cover from bowing.

Secure the Light Bar (Item 14) onto the Mounting Bracket using M8 x 19 x 2 Flat Washers, M8 x 24.5 x 3 Flat Washers, M8 x 16 x 1.6SS Flat Washers, M8 Spring Washers and M8 X 25 Hex Bolts (Items 6, 4, 7 & 8).

Using a tape measure, center the Mounting Brackets, Cover Assembly and Light Bar left to right and fasten the Button Head Bolts mentioned in 3.2.
Place M6 Nut Cups (Item 10) over each of the M6 Nyloc Nuts and M8 Nut Caps (Item 9) over each of M8 Hex Bolts Heads.

Wire the Light Bar to the vehicle according to your personal preference or seek assistance from an auto electrician.

 © 2019 FRONT RUNNER VEHICLE OUTFITTERS

4 FIT AND SECURE LIGHT BAR - UNDER RACK MOUNT

4.1

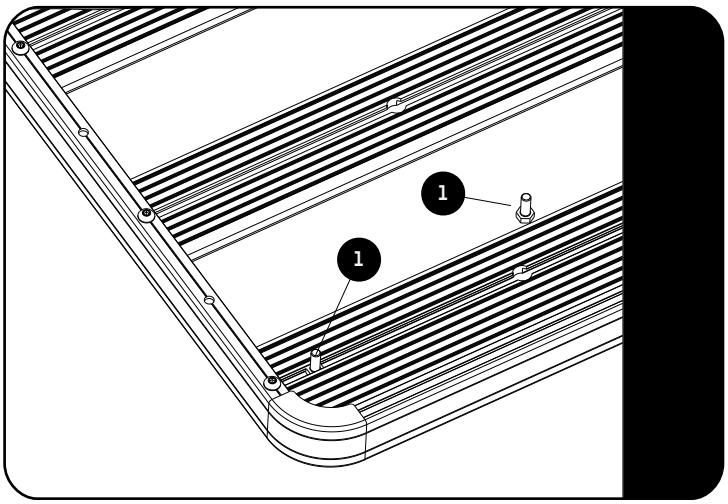

If you would like to mount your Light Bar under your Rack, you will need a minimum of 100mm clearance between the bottom of the Rack and the vehicle's roof in order to fit the LED Light Bar and Cover.

Loosen and remove the wind deflector from your rack if it is already fitted. Working underneath the rack, insert two M8 x 20 Hex Bolts (Item 1) into each end of the front slat using the machined slots as shown.

Rack shown upside down.

4.2

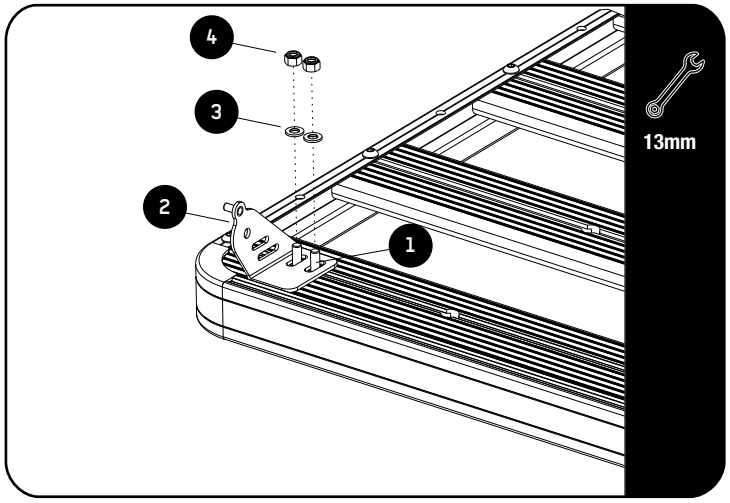

Loosely fasten the two Mounting Brackets (Item 2) to the front slat of the rack, using the M8 x 20 Hex Bolts (Inserted in 4.1), M8 x 16 x 1.6SS Flat Washers and M8 Nyloc Nuts (Items 3 & 4).

4.3

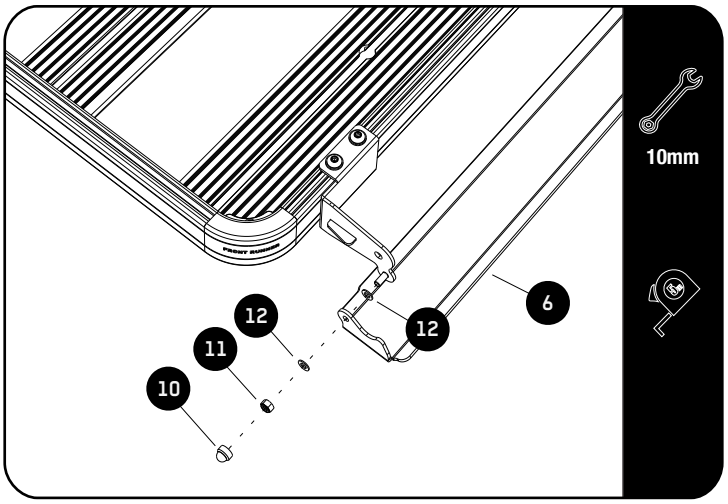

Fasten the Front Cover (Item 6) to the two Mounting Brackets using M6 x 12 x 1SS Flat Washers and M6 Nyloc Nuts (Items 12 & 11). The Front Cover should still be able to rotate after fastening.

Using a tape measure, center the Mounting Brackets and Cover Assembly left to right and fasten the four M8 Nyloc Nuts from 4.2.

© 2019 FRONT RUNNER VEHICLE OUTFITTERS

4 FIT AND SECURE LIGHT BAR - UNDER RACK MOUNT

4.4

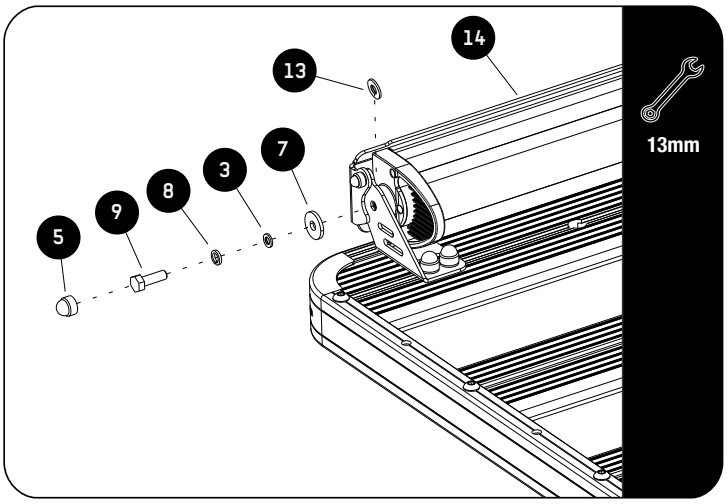

Test fit the Light Bar between the two brackets. If there is a gap between the light and the brackets use Item 13 to fill the gap. This will prevent the Light Cover from bowing.

Secure the Light Bar (Item 14) onto the Mounting Brackets as shown, using M8 x 19 x 2 Flat Washers, M8 x 24.5 x 3 Flat Washers M8 x 16 x 1.6 Flat Washers, M8 ss Spring Washers and M8 x 25 Hex Bolts (Items 13, 7, 3, 8 & 9).

Place M6 Nut Caps (Item 10) over each of the M6 Nyloc Nuts and M8 Nut Caps (Item 5) over each of M8 Hex Bolts Heads.

5 FINISH

Congratulations! You did it. Take a step back and admire your work!

6 INSTALL OTHER VEHICLE AND RACK ACCESSORIES

Now's the time to visit your favorite Front Runner Dealer in person or online.

Be sure to tag us. We love to see our gear in action! #FrontRunnerOutfitters #BornToRoam

Share your adventures on:

© 2019 FRONT RUNNER VEHICLE OUTFITTERS