FRONT RUNNER
VEHICLE OUTFITTERS

# VERTICAL SURFBOARD CARRIER

ENG

RRAC095

30 min

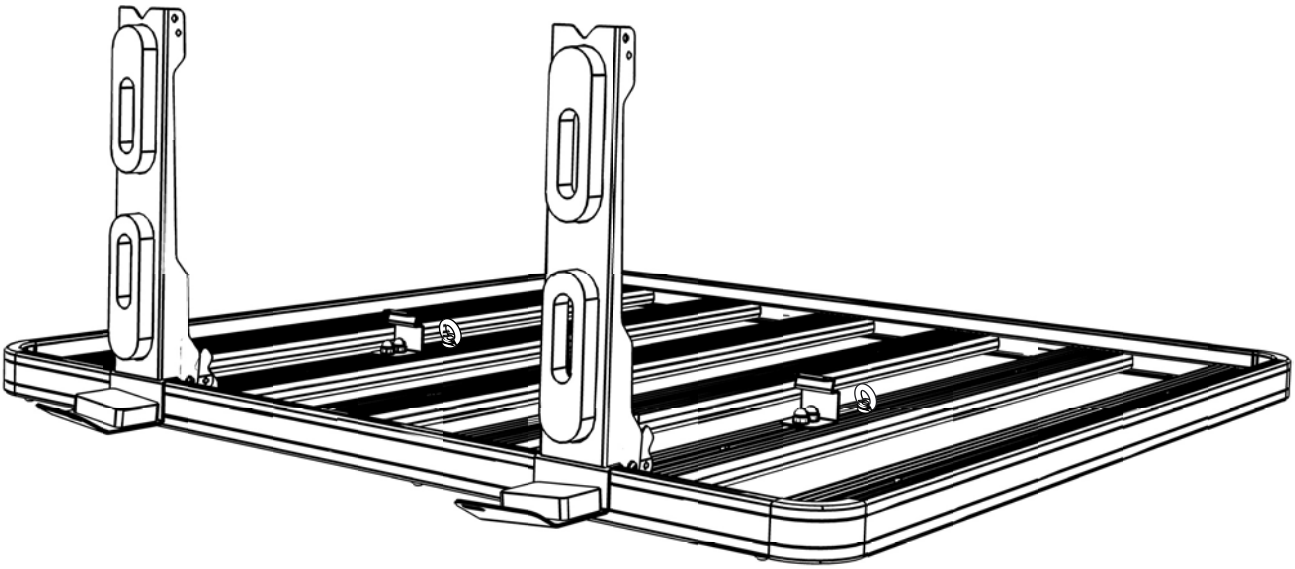

## READ ME !

Thank you for purchasing a Front Runner Vertical Surfboard Carrier .

Before you start, take a moment to familiarize yourself with this Fitting Instruction and the components received.

Refer to Page 2 for a list of all the components, quantities and tools required.

## IMPORTANT WARNING!

IT IS CRITICAL THAT ALL FRONT RUNNER PRODUCTS BE PROPERLY AND SECURELY ASSEMBLED AND ATTACHED TO YOUR VEHICLE.

IMPROPER ATTACHMENT COULD RESULT IN AN AUTOMOBILE ACCIDENT, AND COULD CAUSE SERIOUS BODILY INJURY OR DEATH.

YOU ARE RESPONSIBLE FOR ASSEMBLING AND SECURING ALL FRONT RUNNER PRODUCTS TO YOUR VEHICLE. CHECKING THE ATTACHMENTS PRIOR TO USE, AND PERIODICALLY INSPECTING THE PRODUCTS FOR ADJUSTMENT, WEAR AND DAMAGE.

THEREFORE YOU MUST READ AND UNDERSTAND ALL OF THE INSTRUCTIONS AND PRECAUTIONS SUPPLIED WITH YOUR FRONT RUNNER PRODUCT PRIOR TO INSTALLATION OR USE.

IF YOU DO NOT UNDERSTAND ALL OF THE INSTRUCTIONS AND CAUTIONS, OR IF YOU HAVE NO MECHANICAL EXPERIENCE AND ARE NOT THOROUGHLY FAMILIAR WITH THE INSTALLATION PROCEDURES,

YOU SHOULD HAVE THE PRODUCT INSTALLED BY A PROFESSIONAL INSTALLER OR OTHER QUALIFIED PERSONNEL.


© COPYRIGHT 2016 FRONT RUNNER VEHICLE OUTFITTERS

## 1 GET ORGANIZED

**Here is what you are looking at for RRAC095**

### IN THE BOX

| | | |
|---|---|---|
| 1 | 2 X | Surfboard Support Brackets (1 LH & 1 RH) |
| 2 | 2 X | Vertical Surfboard Bracket |
| 3 | 2 X | Vertical Bracket Catch |
| 4 | 4 X | M8 x 25 Button Head |
| 5 | 12 X | M8 x 16 x 1.6 SS Flat Washer |
| 6 | 1 X | Stratchits With Carabiner (Pair) |
| 7 | 2 X | Stratchit Rubber Pad |
| 8 | 12 X | M8 Nyloc Hex Nut |
| 9 | 8 X | M8 Nut Cap |
| 10 | 10 X | M8 x 16 Hex Bolt |
| 11 | 2 X | M8 Eye Nut |
| 12 | 2 X | M8 Nylon Washer |

### TOOLS NEEDED

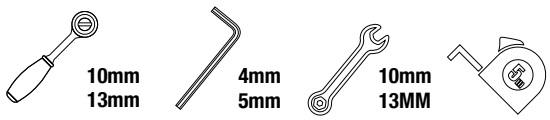


FIGURE 1.1

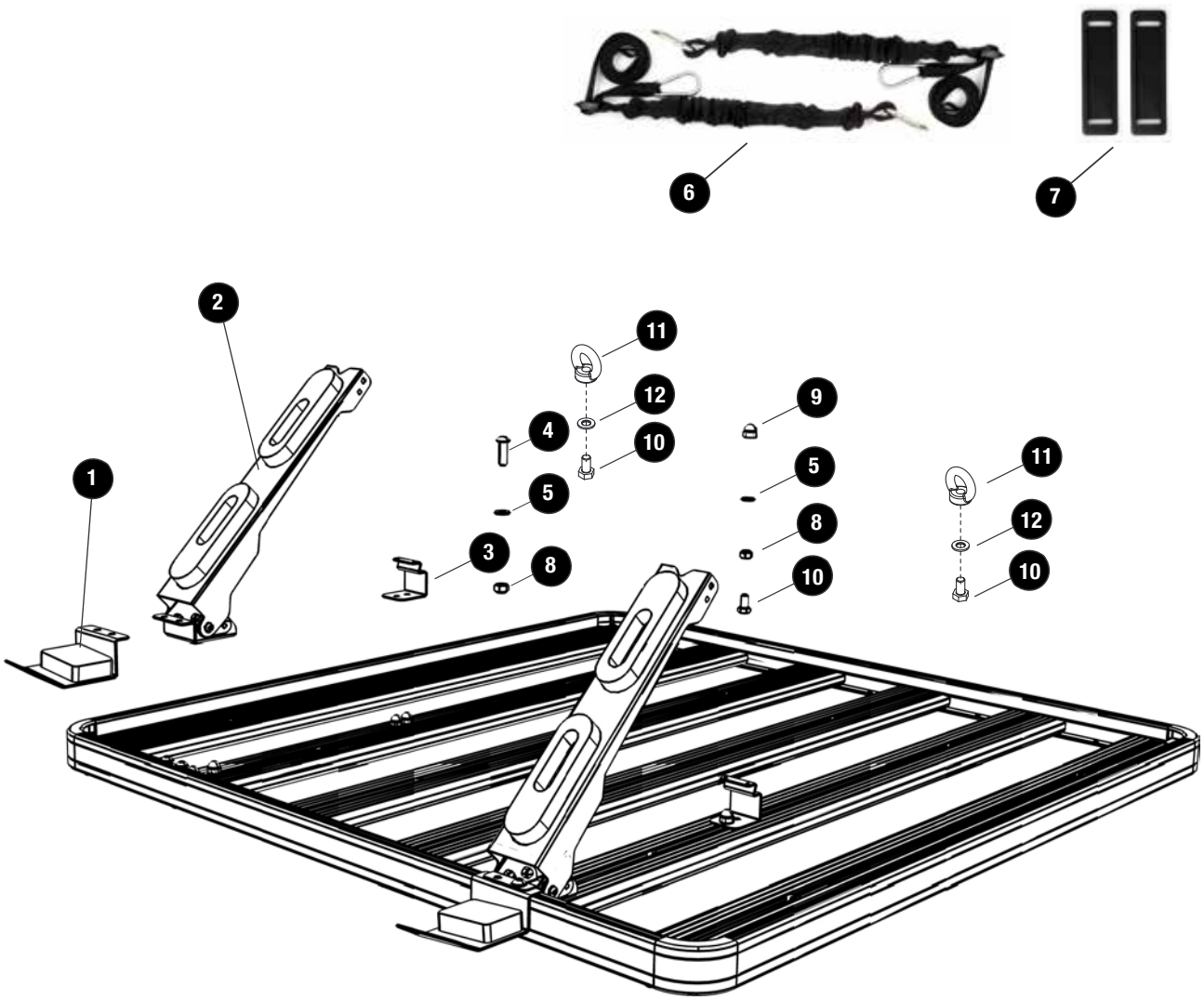


 © COPYRIGHT 2016 FRONT RUNNER VEHICLE OUTFITTERS

## 2 FIT AND SECURE

**2.1**

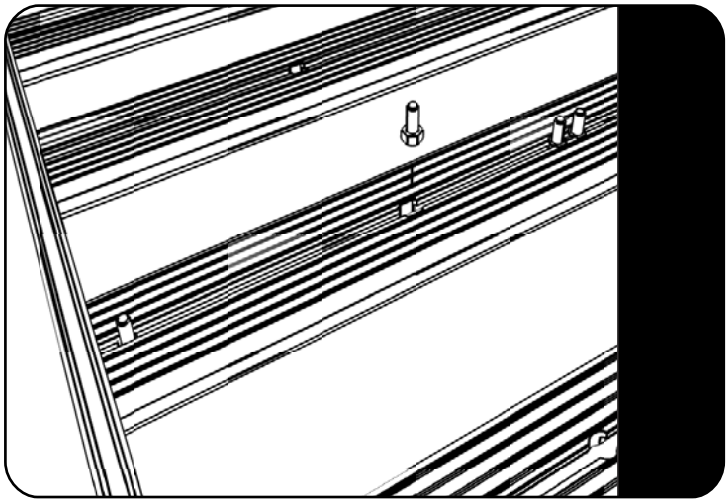

A basic guideline for placing the Surfboard Brackets would be to measure or estimate a third of the length of your Surfboard. Once you have decided what this length is, slide four M8 x 16 Hex Bolts (Item 10) into each of the two slats you have decided to use for the Surfboard Brackets. Slide two to the side and two slightly to the middle of the rack.

Take note of the length and shape of the Board, so that it does not interfere with the opening of the vehicle doors.

**2.2**

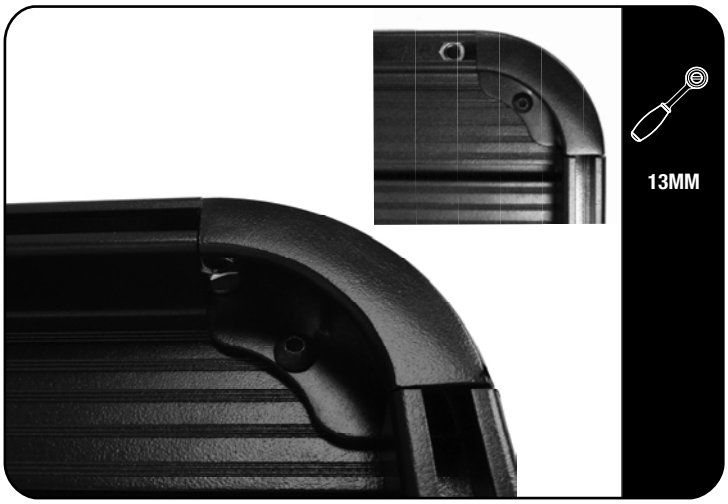


Insert four M8 Nyloc Hex Nuts (Item 8), dome side down into the "U" Channel of the racks side profile through the gap in the corner as shown. Slide the Nyloc Hex Nuts along the "U" Channel.

**2.3**

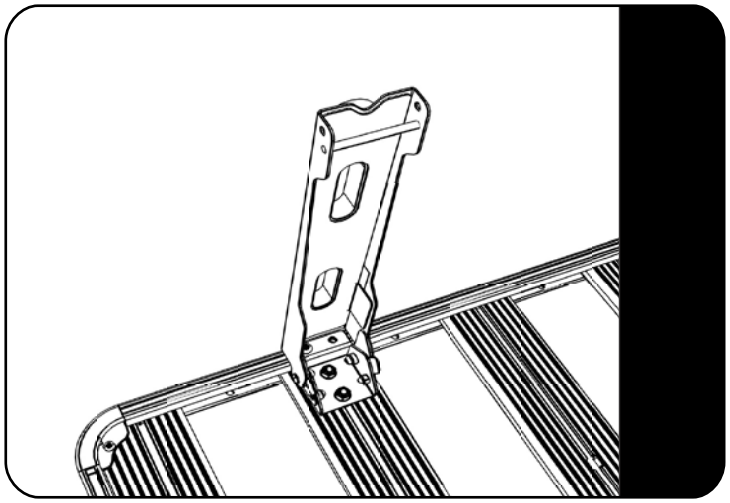

Now place the Vertical Surfboard Bracket (Item 2) over the two M8 x 16 Hex Bolts (Item 10) closest to the side profile in Step 2.1. Place two M8 x 16 x 1.6 SS Flat Washers over the Hex Bolts and loosely fasten the brackets with two M8 Nyloc Hex Nuts (Item 8).


© COPYRIGHT 2016 FRONT RUNNER VEHICLE OUTFITTERS

## 2 FIT AND SECURE

**2.4**

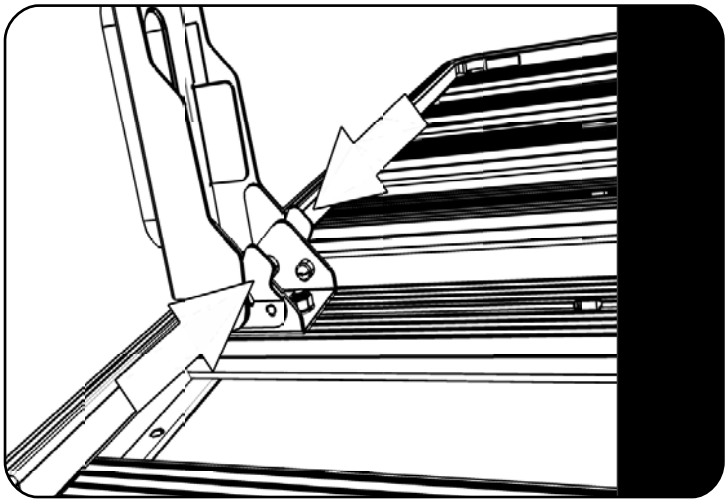

To fold the Vertical Surfboard Bracket down press the two tabs towards each other as indicated by the arrows.

**2.5**

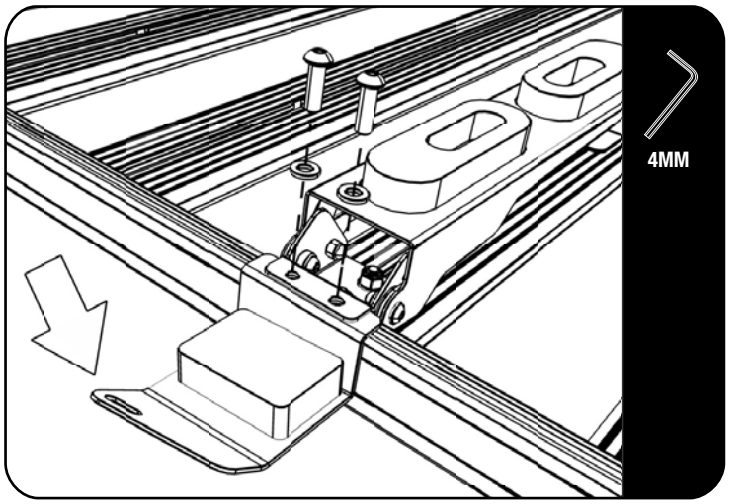


Place the Support Bracket (Item 1) in-between the side profile and Vertical Surf Board Bracket. Make sure that the slot in the front of the bracket points inward toward the middle of the rack.

Fasten the two brackets with two M8 Button Head Screws (Item 4) and two M8 Flat Washers (Item 5) to the side profile with the Nyloc Hex Nuts you inserted in Step 2.2.

**2.6**

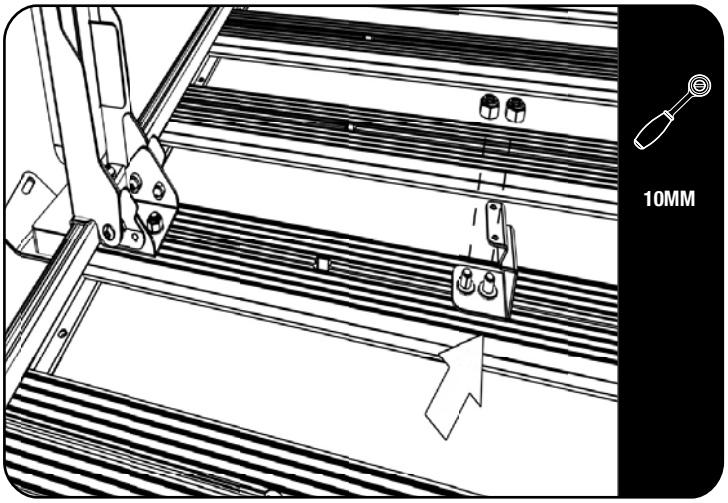


Raise the Vertical Surfboard Bracket providing space to loosely fasten the Vertical Bracket Catches (Item 3) to your Front Runner Rack. Place the Vertical Bracket Catch over the remaining two M8 x 16 Hex Bolts inserted in Step 2.1. Fasten the Catch with two M8 x 16 x 1.6SS Flat Washers (Item 5) and two M8 Nyloc Hex Nuts (Item 8). Make sure that the bracket is orientated as shown.


© COPYRIGHT 2016 FRONT RUNNER VEHICLE OUTFITTERS

## 2 FIT AND SECURE

**2.7** With the Vertical Surfboard Bracket in the upright position, fully tighten the two M8 Nyloc Hex Nuts loosely fastened in Step 2.6

**2.8**

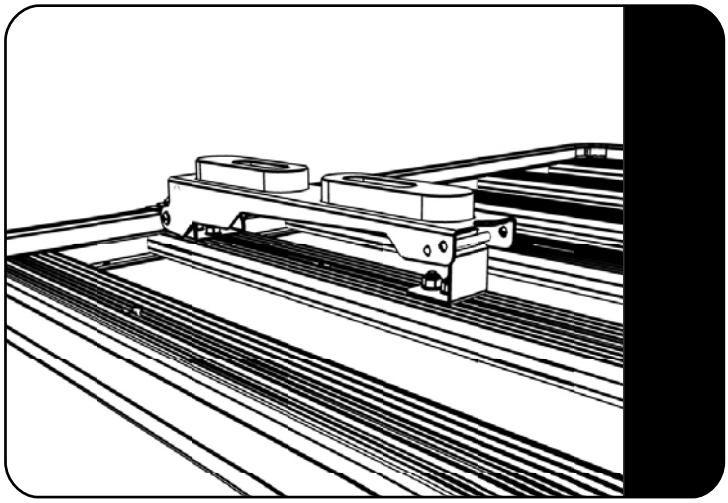

Lower the Vertical Surfboard Bracket and position the Catch (item 3) so that it firmly catches on the bar at the end of the Vertical Surfboard Bracket.

Fully tighten the catch in place. Open and close to check the operation of the catch, if you are satisfied move on to the other Vertical Surfboard Bracket.

**2.9** Repeat Steps 2.2 through 2.8 to mount the second Vertical Surfboard Bracket.

**2.10**

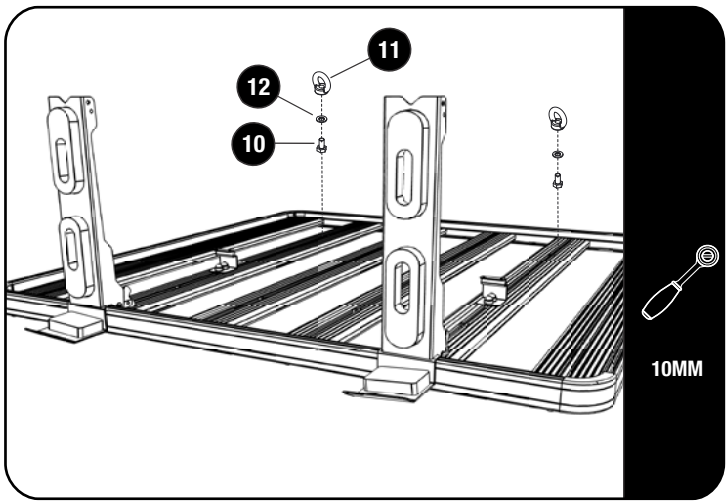


Finally place items 10, 11 & 12 into the T-Slot as shown. The Eye Nuts (Item 11) will be used to secure the Board in place on the carrier bracket when used in the down position.

**2.10** Finish the installation by placing a M8 Nut Cap (Item 9) over all the M8 Nyloc Nuts (Item 8).


© COPYRIGHT 2016 FRONT RUNNER VEHICLE OUTFITTERS

## 3 SECURING THE SURFBOARD

**3.1**

**Grab your Stratchit (Item 6) and remove the carabiner from the strap end of the Stratchit. Thread the strap through the Rubber Pad (Item 7) as shown.**

**3.2**

**Make sure that the recess in the Rubber Pad faces in the same direction as the self gripping buckle and clip the carabiner back onto the loop at the end of the strap.**

**3.3**

**Clip the carabiner you just worked with into the hole at the top of the Vertical Surf Board Bracket. Then rest the Surfboard onto the support brackets with the bottom of the Surfboard against the Vertical Bracket and hang the Stratchits over the Surfboard.**


© COPYRIGHT 2016 FRONT RUNNER VEHICLE OUTFITTERS

## 3 SECURING THE SURFBOARD

3.4

Clip the two loose carabiners through the slot in the adjacent Support Brackets (Item 1). Tighten the Stratchits insuring the Rubber Pads protect the Board.

## 4 COMPLETION

4.1

Congratulations. You did it. Take a step back and admire your work!

**5** Front Runner will not be responsible for any damage caused by the failure to install the product according to these instructions. Please call us if you have any questions about the installation of this product.

## 6 INSTALL OTHER VEHICLE AND RACK ACCESSORIES

Now's the time to visit your favorite Front Runner Dealer in person or online.