FRONT RUNNER

ENG

LED 4" FLOODLIGHT UNIT

RRAC055/RRAC059

INSTALL TIME: 30 mins

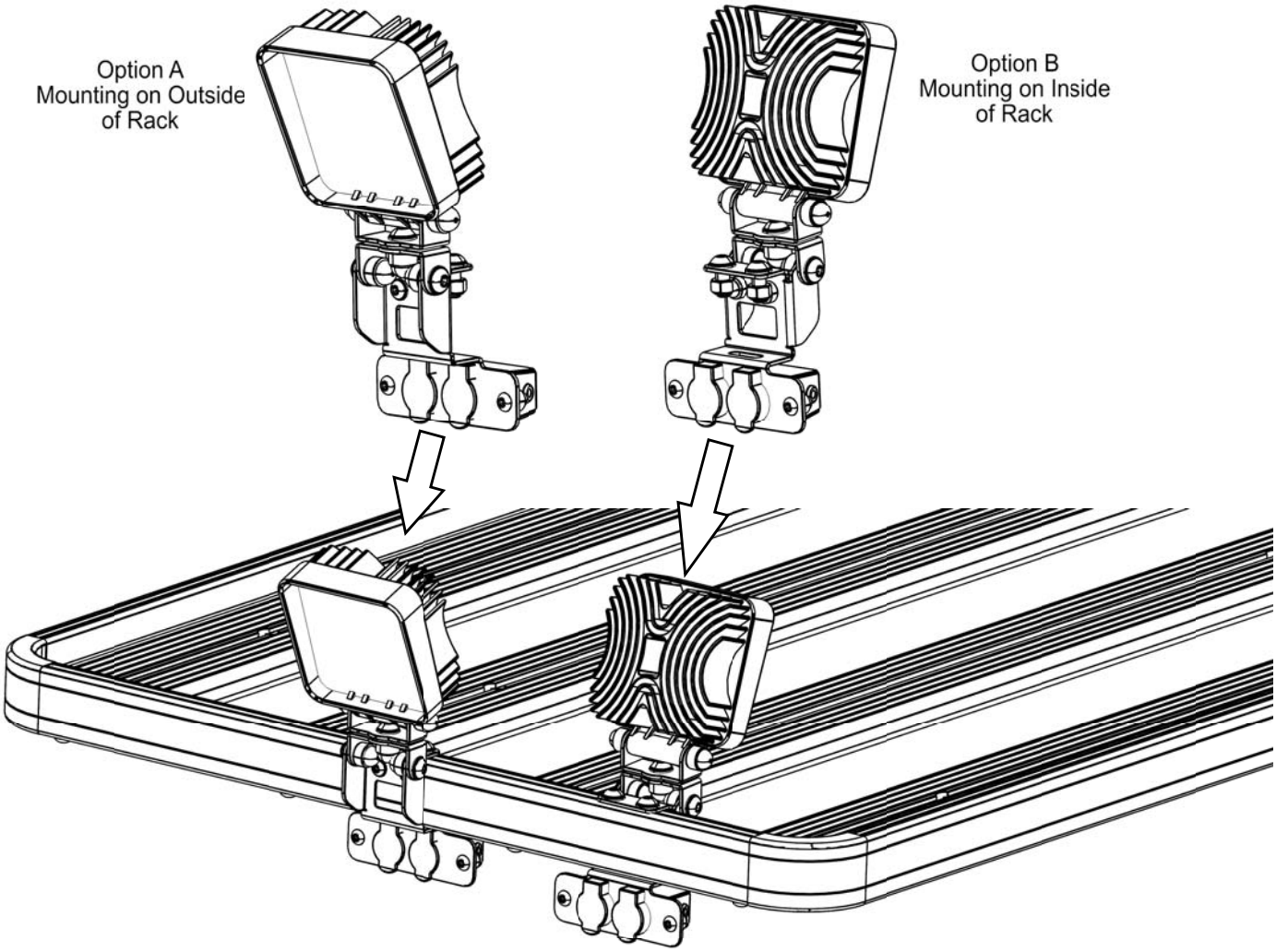

Depending on the type of installation chosen, not all components supplied will be used. Refer to Page 13 Section 7 on how to set the angle of the Floodlight.

IMPORTANT WARNING!

IT IS CRITICAL THAT ALL FRONT RUNNER PRODUCTS BE PROPERLY AND SECURELY ASSEMBLED AND ATTACHED TO YOUR VEHICLE. IMPROPER ATTACHMENT COULD RESULT IN AN AUTOMOBILE ACCIDENT, AND COULD CAUSE SERIOUS BODILY INJURY OR DEATH TO YOU OR TO OTHERS. YOU ARE RESPONSIBLE FOR ASSEMBLING AND SECURING ALL FRONT RUNNER PRODUCTS TO YOUR VEHICLE, CHECKING THE ATTACHMENTS PRIOR TO USE, AND PERIODICALLY INSPECTING THE PRODUCTS FOR ADJUSTMENT, WEAR, AND DAMAGE. THEREFORE, YOU MUST READ AND UNDERSTAND ALL OF THE INSTRUCTIONS AND CAUTIONS SUPPLIED WITH YOUR FRONT RUNNER PRODUCT PRIOR TO INSTALLATION OR USE. IF YOU DO NOT UNDERSTAND ALL OF THE INSTRUCTIONS AND CAUTIONS, OR IF YOU HAVE NO MECHANICAL EXPERIENCE AND ARE NOT THOROUGHLY FAMILIAR WITH THE INSTALLATION PROCEDURES, YOU SHOULD HAVE THE PRODUCT INSTALLED BY A PROFESSIONAL INSTALLER OR OTHER QUALIFIED PERSONNEL.

© COPYRIGHT 2015 FRONT RUNNER VEHICLE OUTFITTERS

1 GET ORGANIZED - ASSEMBLING SWIVEL BRACKET

Here is what you are looking at:

Item #	Quantity	Description
1	5	M8 NUT CAP
2	4	M8 NYLOC NUT
3	6	M8 FLAT WASHER
4	1	4" LED FLOODLIGHT
5	1	M8 x 65 HEX BOLT
6	1	M8 SPRING WASHER
7	1	M8 x 20 BUTTON HEAD BOLT
8	1	NYLON WASHER
9	2	SWIVEL BRACKET

***Only the right hand side fasteners are shown for Swivel Bracket due to space. Repeat for left hand side.**

You will need:

- ☐ 13 mm Flat Wrench
- ☐ 13 mm Socket Wrench
- ☐ 10 mm Flat or Socket Wrench
- ☐ 4 mm Hex Key (Front/Rear Mounting Option)
- ☐ 5 mm Hex Key
- ☐ Side Cutter
- ☐ Wire Stripper
- ☐ Crimping Tool
- ☐ Tape Measure
- ☐ 6.5 mm Drill Bit (Slimline fitment only)
- ☐ Drill Machine (Slimline fitment only)

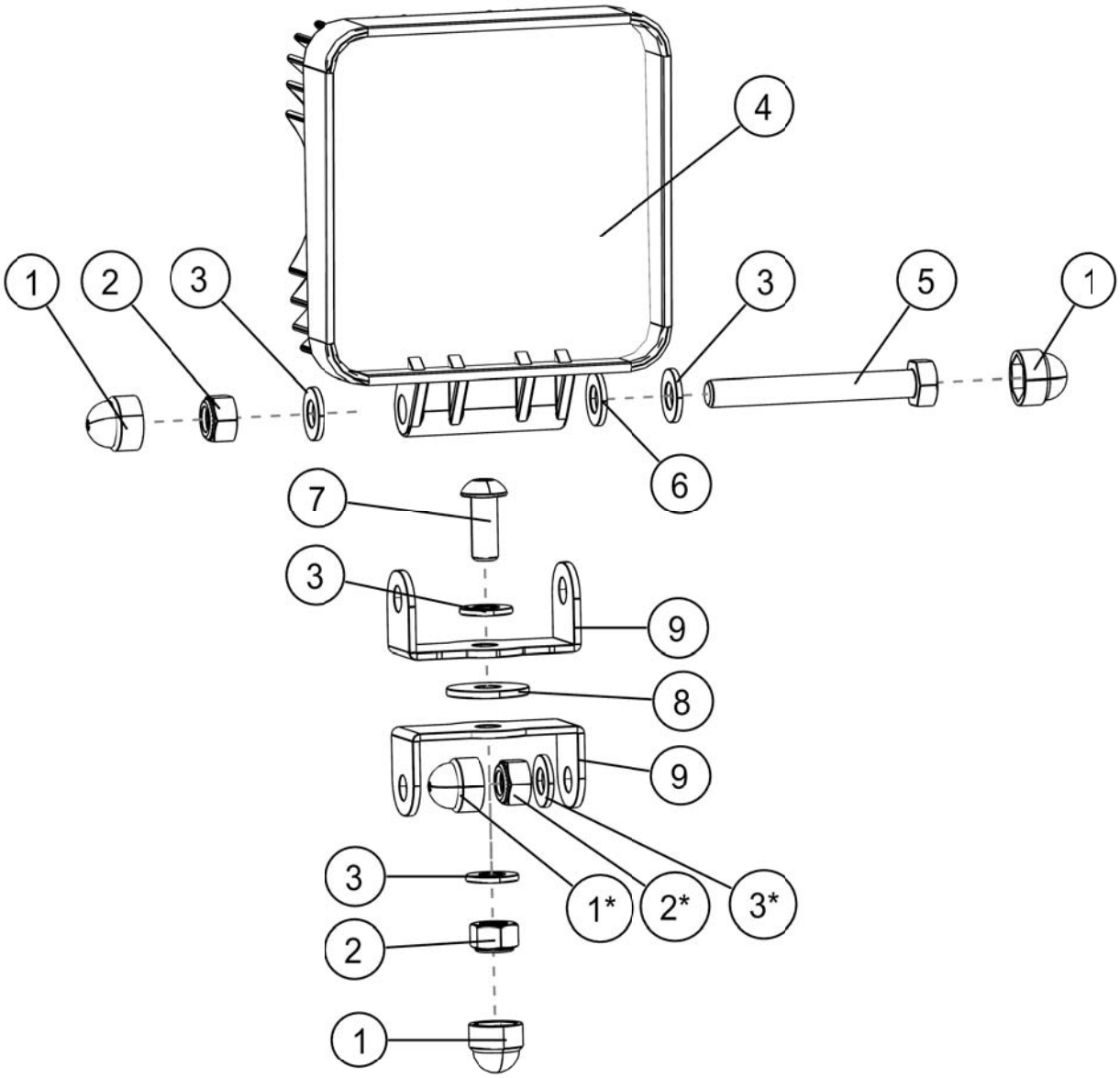

© COPYRIGHT 2015 FRONT RUNNER VEHICLE OUTFITTERS

1 GET ORGANIZED CONT...

Mounting on Outside of Rack

Item #	Quantity	Description
10	3	FLAG TERMINAL
11	3	FLAG TYPE INSULATING BOOT
12	2	HELLA PLUG
13	1	EARTH PLATE
14	2	HELLA PLUG HEX NUT
15	1	RUBBER GROMMET
16	1	ELECTRICAL COVER
17	6	M6 FLAT WASHER
18	4	M6 NYLOC NUT
19	4	M6 NUT CAP
20	4	M8 x 20 BUTTON HEAD BOLT
21	7	M8 FLAT WASHER
22	2	M8 NYLOC NUT
23	2	M6 x 12 BUTTON HEAD BOLT
24	1	MOUNTING BRACKET
25	2	M6 x 16 BUTTON HEAD BOLT

***Used when mounting to the outside of a Slimline Rack.**

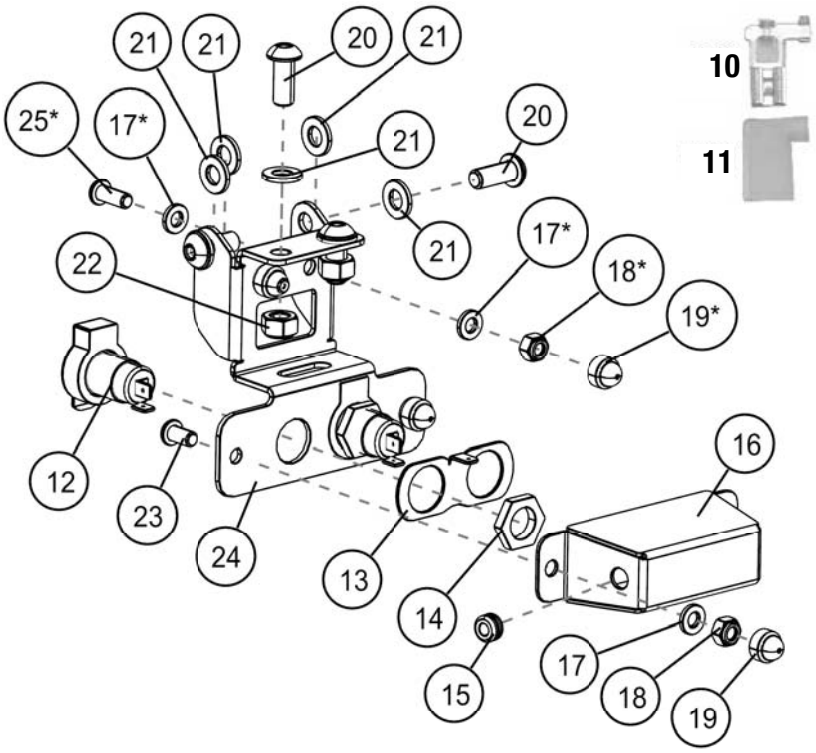

Mounting on Inside of Rack

Item #	Quantity	Description
10	2	FLAG TERMINAL
11	2	FLAG TYPE INSULATING BOOT
12	2	HELLA PLUG
13	1	EARTH PLATE
14	2	HELLA PLUG HEX NUT
15	1	RUBBER GROMMET
16	1	ELECTRICAL COVER
17	2	M6 FLAT WASHER
18	2	M6 NYLOC NUT
19	2	M6 NUT CAP
20	4	M8 x 20 BUTTON HEAD BOLT
21	7	M8 FLAT WASHER
22	2	M8 NYLOC NUT
23	2	M6 x 12 BUTTON HEAD BOLT
24	1	MOUNTING BRACKET

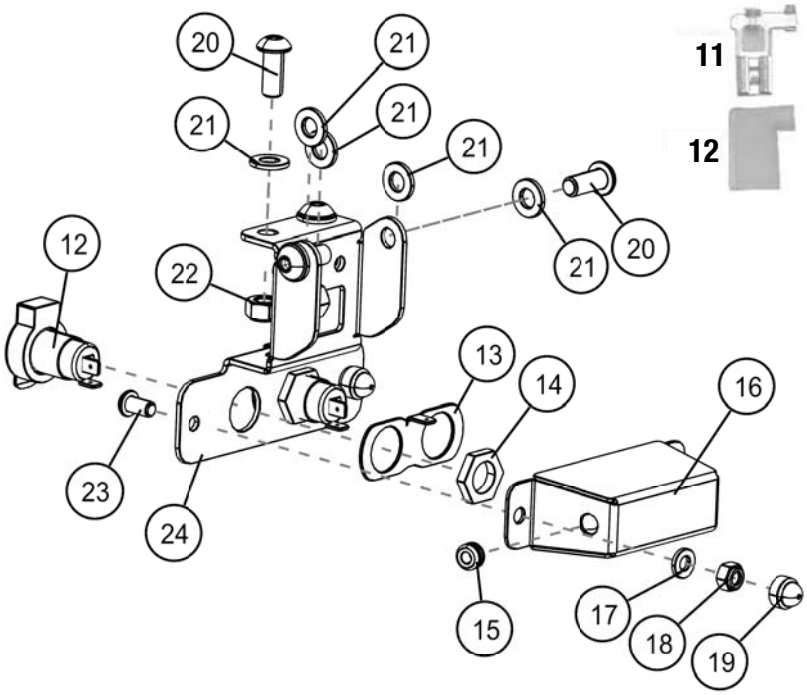

(A) **Familiarize yourself with the parts and then step away from the work area and read through these instructions from beginning to end. Take a moment as a little prep now may save you a lot of time later.**

© COPYRIGHT 2015 FRONT RUNNER VEHICLE OUTFITTERS

The 4" Floodlight may be wired and connected to the the vehicle's electrical system according to personal preferences and requirements. Steps 2A -2I below, illustrate Front Runners suggested method for wiring and connecting your 4" Floodlight to the vehicle's electrical system.

If the suggested method is selected, power to the Floodlight is supplied by running a Extension Cable (Not supplied) from a power outlet on the vehicle to one of the Hella Plugs found on the front of the Floodlight's mounting bracket (Refer to Page 7 Step 3L). Should you wish to purchase the Front Runner Extension Cable, the Part Number / Item Code is ECOM076.

2 PREPARE WIRING (SUGGESTED METHOD)

(A) Measure and cut the Floodlight's electrical cable to 400 mm. Keep the off-cut for Step 2C.

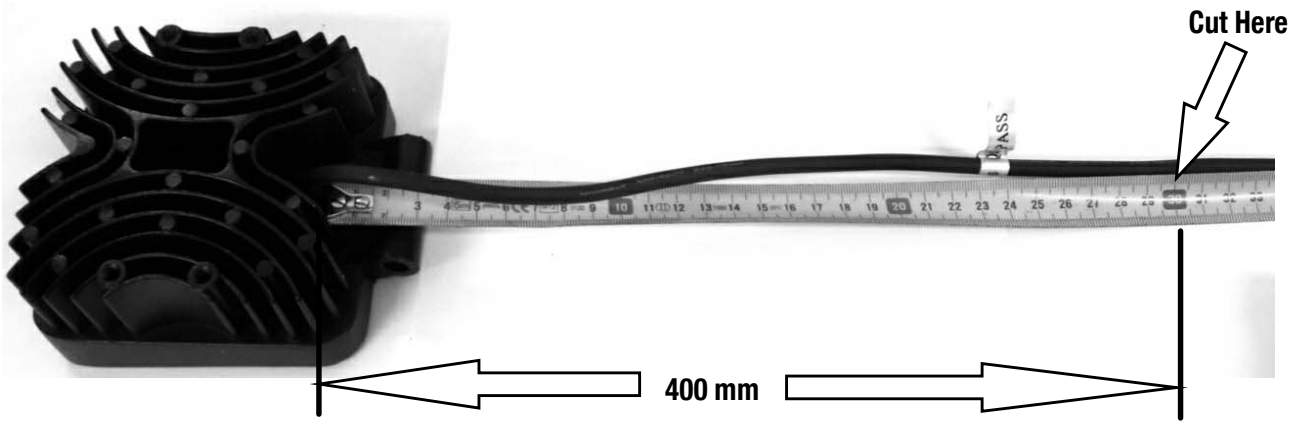

(B) Strip the black, outer insulation on the cut end of the electrical cable back 50 mm.

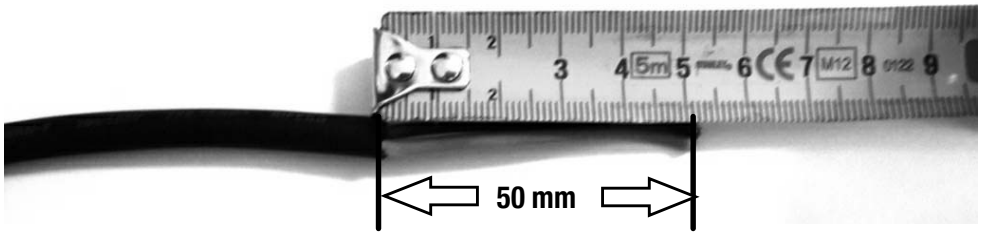

(C) From the off-cut in Step 2A, cut a section of wire 60 mm long. Strip off the black outer insulation. Keep the 60 mm length of RED wire and dispose of the remaining wire.

© COPYRIGHT 2015 FRONT RUNNER VEHICLE OUTFITTERS

2 PREPARE WIRING (SUGGESTED METHOD) CONT...

(D) **Strip one end of the insulation on the red wire from Step 2C back 5 mm and crimp the Flag Terminal (Item 10) to the wire as shown below.**

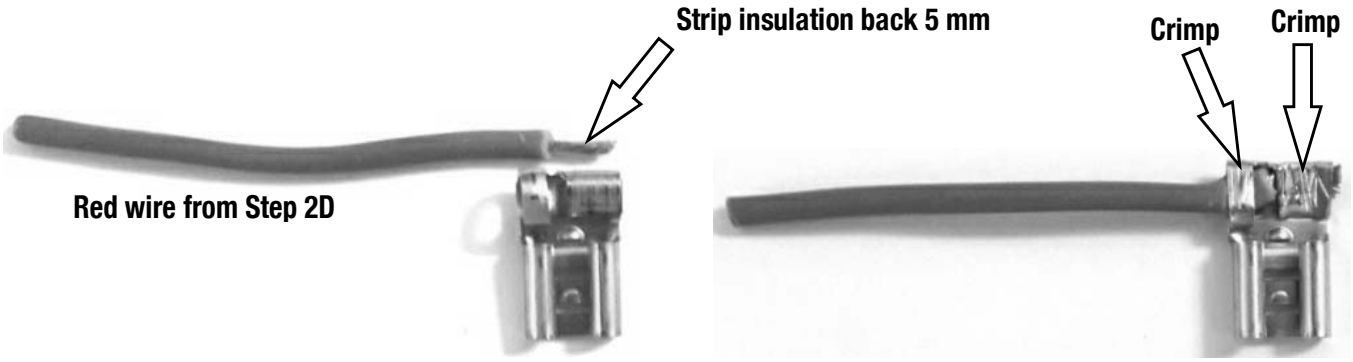

(E) **Fit an Insulating Boot (Item 11) over the crimped Flag Terminal as shown below.**

(F) **Insert the Rubber Grommet (Item 15) into the hole in the Electrical Cover (Item 16) and feed the Floodlight's electrical cable through the hole in the Rubber Grommet as shown.**

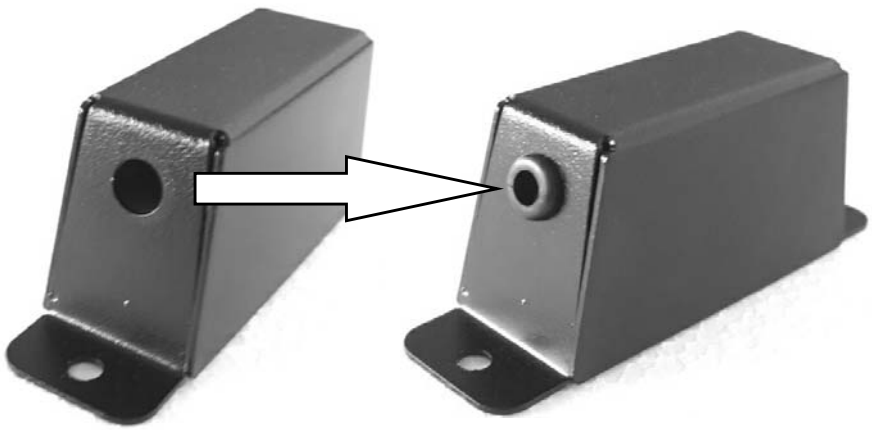

© COPYRIGHT 2015 FRONT RUNNER VEHICLE OUTFITTERS

2 PREPARE WIRING (SUGGESTED METHOD) CONT...

(G) Reffering to Steps 2D & 2E as a guide, strip back 5 mm of insulation on the BLACK wire of the lights power cable. Slide an Insulating Boot over the wire, crimp a Flag Terminal to the wire and fit the Insulating Boot over the Flag Terminal as shown below.

(H) Following the steps below, strip and twist the red wires together as shown.

Strip back the insulation by 10 mm on the RED wire of lights power cable.

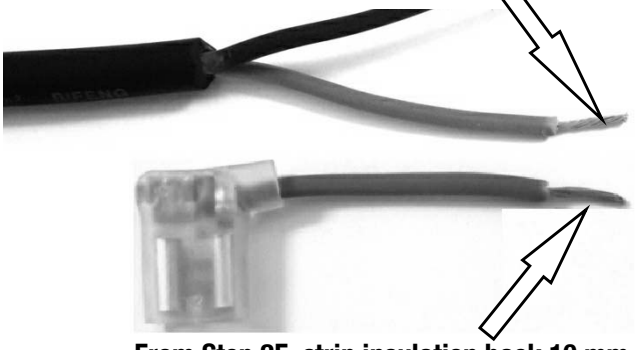

From Step 2E, strip insulation back 10 mm on opposite end to Flag terminal.

Twist together

(I) Slide an Insulating Boot (Item 11) over the twisted pair of red wires from Step 2F and crimp a Flag Terminal (Item 10) onto the end of the twisted pair as shown.

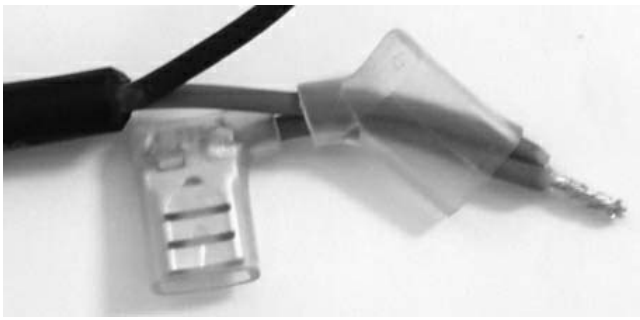

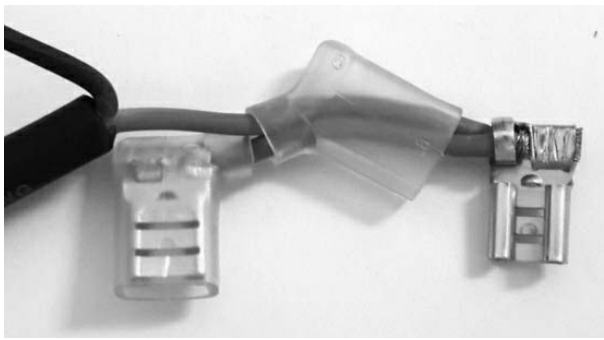

© COPYRIGHT 2015 FRONT RUNNER VEHICLE OUTFITTERS

2 PREPARE WIRING (SUGGESTED METHOD) CONT...

(J) **Looking at the two Hella Plugs (Item 12), cut off the outer "tab" on each using a pair of side cutters.**

DO NOT CUT OFF THE MIDDLE TAB

(K) **Remove the plastic film either side of the Earth Plate and bend the "tab" on the Earth Plate (Item 13) to 90 degrees as shown.**

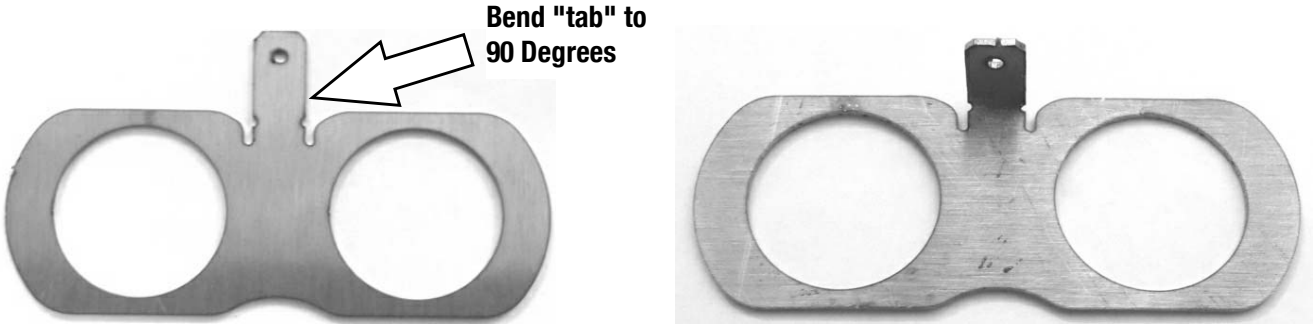

(L) **Remove the Hex Nut (Item 14) from the back of each Hella Plug (Item 12) and secure the Earth Plate (Item 13) and Hella Plugs to the Mounting Bracket (Item 24) as shown below for the various mounting options.**

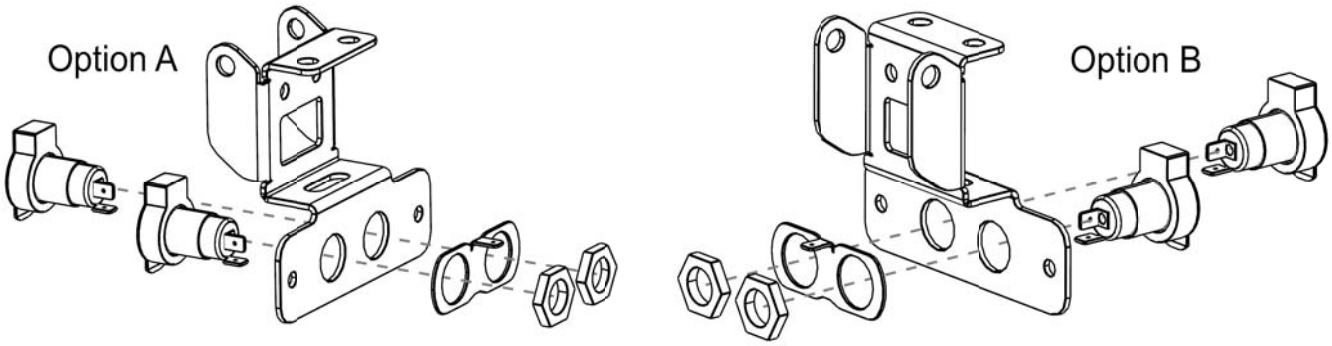

© COPYRIGHT 2015 FRONT RUNNER VEHICLE OUTFITTERS

3 PREPARE FOR LIGHT INSTALL

(A) **Assemble one of the Swivel Brackets (Item 9) to the Mounting Bracket (Item 24) using seven M8 Flat Washers, two M8 Nyloc Nuts and two M8 x 20 Hex Bolts (Items 2, 3, 20, 21).**

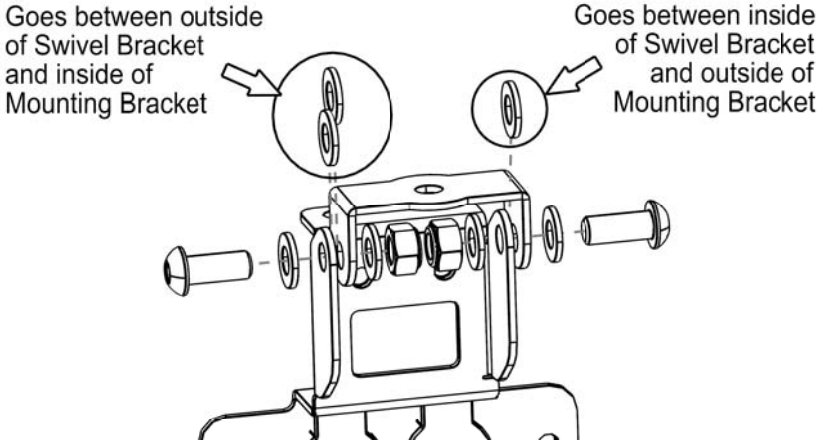

(B) **Assemble the remaining Swivel Bracket (Item 9) to the Mounting Bracket assembly from Step 3D using two M8 Flat Washers, one M8 Nyloc Nut, one M8 x 20 Hex Bolt and one Nylon Washer (Items 2, 3, 7, 9).**

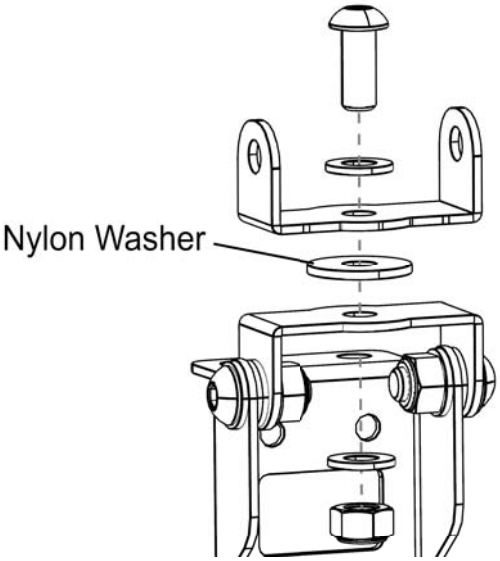

(C) **Assemble the Floodlight to the Mounting Bracket assembly using the M8 x 65 Hex Bolt, two M8 Flat Washers, one M8 Nyloc Nut and the M8 Spring Washer (Items 2, 3, 5, 6) as shown. Ensure that the Spring Washer goes between the Light and the Swivel Bracket.**

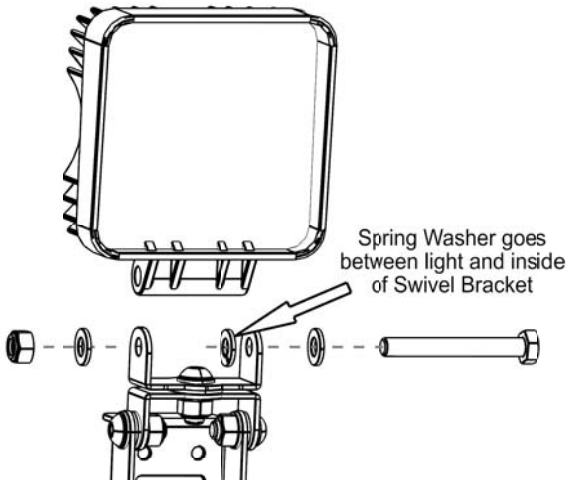

© COPYRIGHT 2015 FRONT RUNNER VEHICLE OUTFITTERS

3 PREPARE FOR LIGHT INSTALL

(D) Connect the light to the Hella Plugs as shown below. The two red wires go onto the center "tabs" of the Hella Plugs and the black wire goes onto the "tab" on the Earth Plate.

Red Wire to "tab" in center of Hella Plug

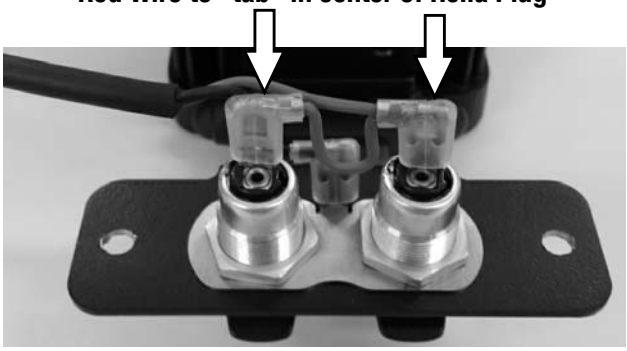

Black wire to "tab" on Earth Plate

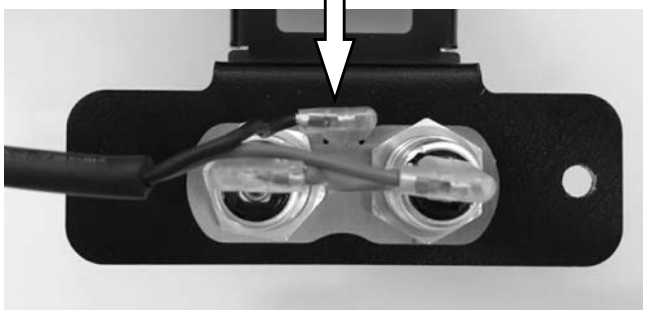

(E) Fit the Electrical Cover (Item 16) over the rear of the Hella Plugs and electrical connections and secure in place using two M6 x 12 Button Head Bolts, two M6 Flat Washers and two M6 Nyloc Nuts (Items 17, 18, 23). Place a M6 Nut Cap (Item 19) over each of the Nyloc Nuts.

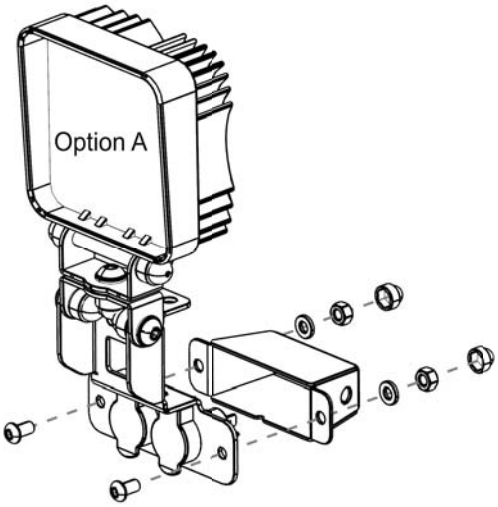

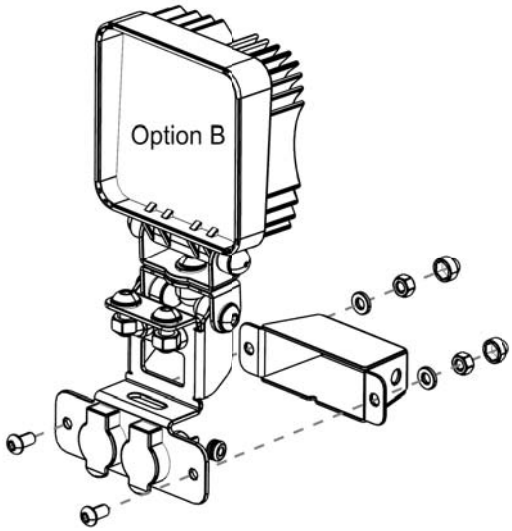

(F) If you have chosen Mounting Option A, the Floodlight may be mounted on the front, rear, left or right hand side of your Rack. If your vehicle's rear door opens upwards and you wish to mount the Floodlight Unit on the rear of the Rack, you will need to check the clearance between the Floodlight Unit and the vehicle with the rear door in the open position.

If you have chosen Mounting Option B, the Floodlight may only be mounted on the left of right hand side of the rack. This option allows the Light to fold flat inside the Rack. Mounting Option B unfortunately not available on a Slimline Rack

For Mounting Option A, refer to Section 4 for a Slimline II Rack and Section 6 for a Slimline Rack. For Mounting Option B refer to Section 5.

© COPYRIGHT 2015 FRONT RUNNER VEHICLE OUTFITTERS

4 FIT LIGHT - MOUNTING OPTION A - SLIMLINE II RACK

(A) **Decide where on your Rack you would like to install the Floodlight Unit.**

On the chosen side, slide two M8 Nyloc Nuts (Item 22) dome side down into the U-channel through the gap in the corner of the Tray as shown. Slide the two Nyloc Nuts down the U-channel and into the chosen.

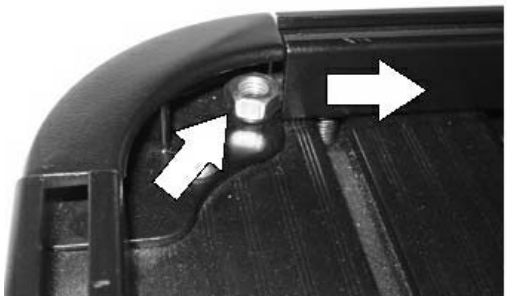

(B) **Place the Floodlight over the outside of the Rack and slide the two M8 Nyloc Nuts from Step 4A underneath the Floodlight, lining the nuts up with the two mounting holes in the Bracket. Secure the Floodlight to the Rack using the two M8 x 20 Button Head Bolts and two Flat Washers (Items 20 & 21) and the Nyloc Nuts inserted in Step 3A. Refer to Page 14 Section 7 on how to adjust the angle of the light.**

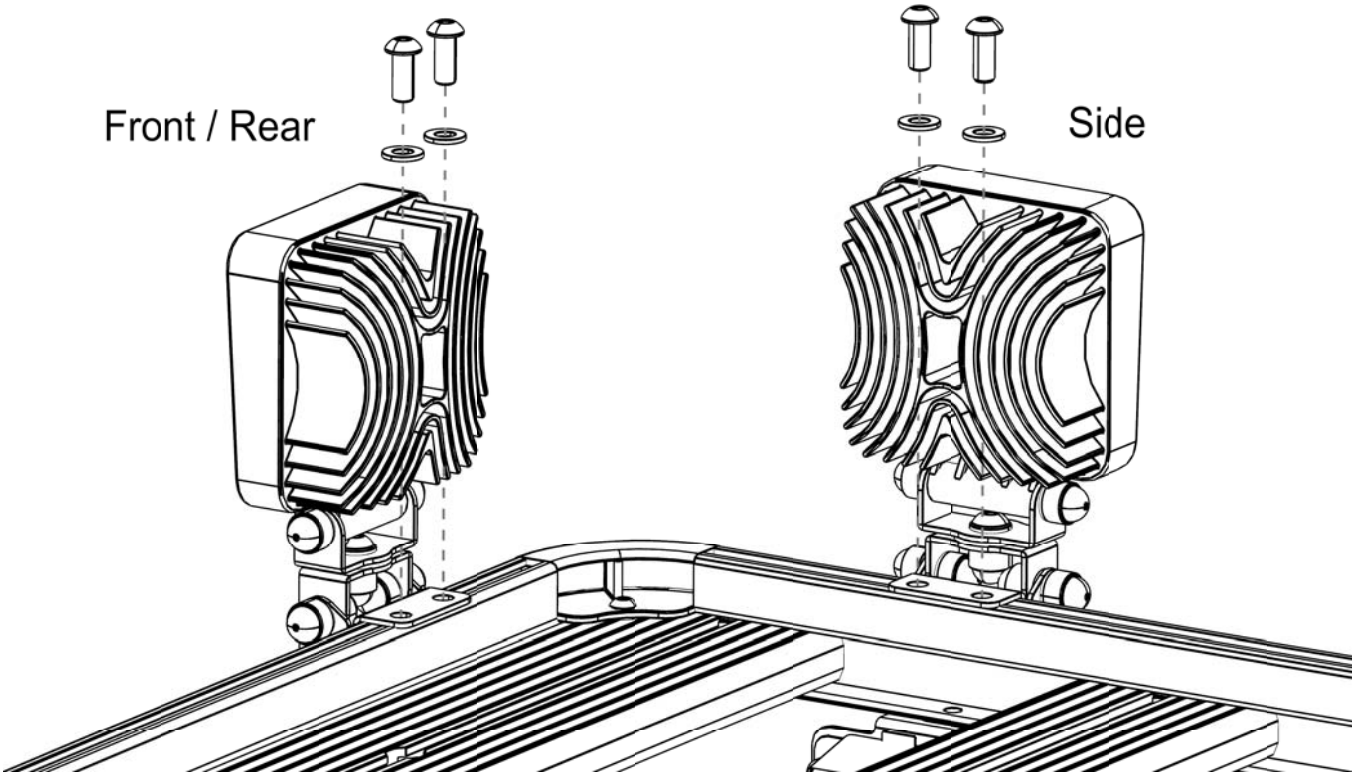

(C) **Congratulations, you have completed your installation. Take a step back and admire your work. Good Job!**

© COPYRIGHT 2015 FRONT RUNNER VEHICLE OUTFITTERS

5 FIT LIGHT - MOUNTING OPTION B - SLIMLINE II RACK

(A) **Decide where on your Rack you would like to install the Floodlight Unit.**

On the chosen side, slide two M8 Nyloc Nuts (Item 22) dome side down into the U-channel through the gap in the corner of the Tray as shown. Slide the two Nyloc Nuts down the U-channel and into position between the two chosen slats.

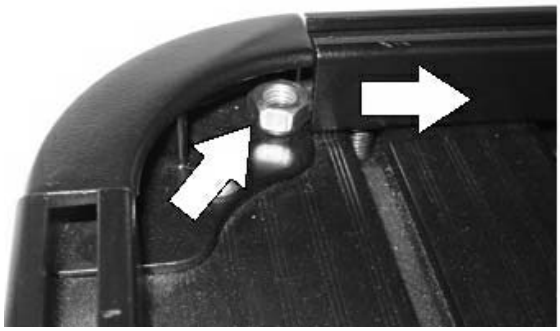

(B) **Place the Floodlight over the inside of the Rack and line the two M8 Nyloc Nuts from Step 5A up with the two mounting holes in the Bracket. Secure the Floodlight to the Rack using the two M8 x 20 Button Head Bolts and two Flat Washers (Items 20 & 21) and the two Nyloc Nuts. Refer to Page 13 Section 7 on how to adjust the angle of the light.**

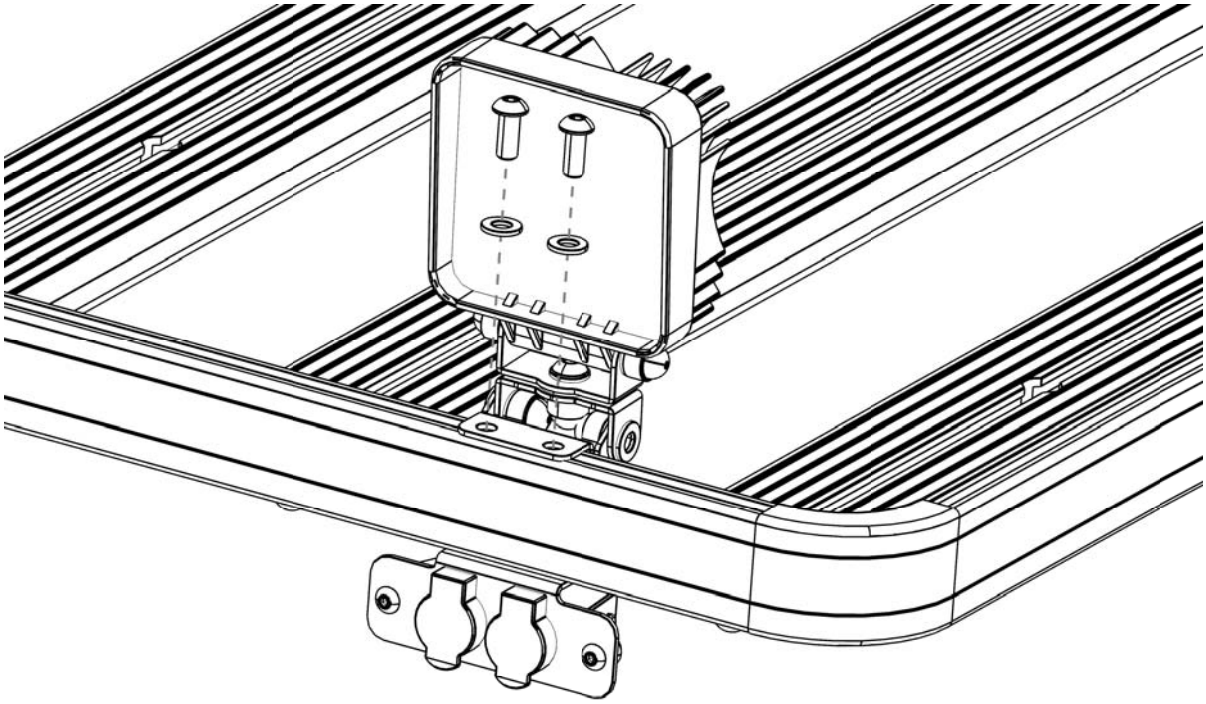

(C) **Congratulations, you have completed your installation. Take a step back and admire your work. Good Job!**

© COPYRIGHT 2015 FRONT RUNNER VEHICLE OUTFITTERS

6 FIT LIGHT - SLIMLINE RACK

(A) Place the Floodlight over the side of the rack in the desired position. Mark the position of the two holes as indicated by the arrows onto the side of the Rack. Remove the Floodlight and drill a 6 mm hole on each of your two markings.

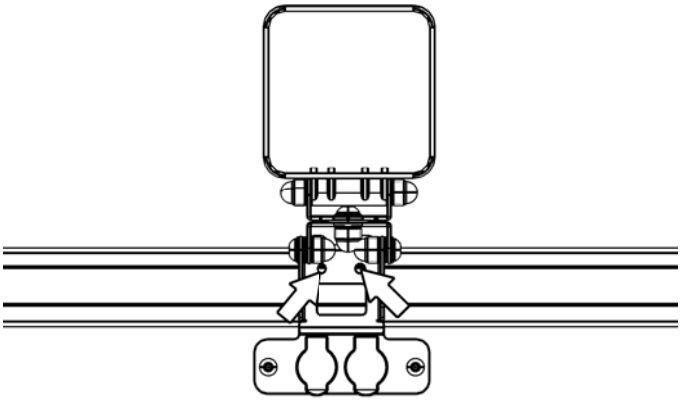

(B) Place the Floodlight back over the side of the Rack, lining the holes in the Floodlight up with the holes drilled in Step 6A. Secure the Floodlight to the Rack using two M6 x 20 Button Head Bolts, Four M6 Flat Washers and two M6 Nyloc Nuts (Items 17, 18, 25). The Nyloc Nuts and two of Washers go on the inside of the Rack. Once secured, place a M6 Nut Cap (Item 19) over each of the Nyloc Nuts. Refer to Page 13 Section 7 on how to adjust the angle of the light.

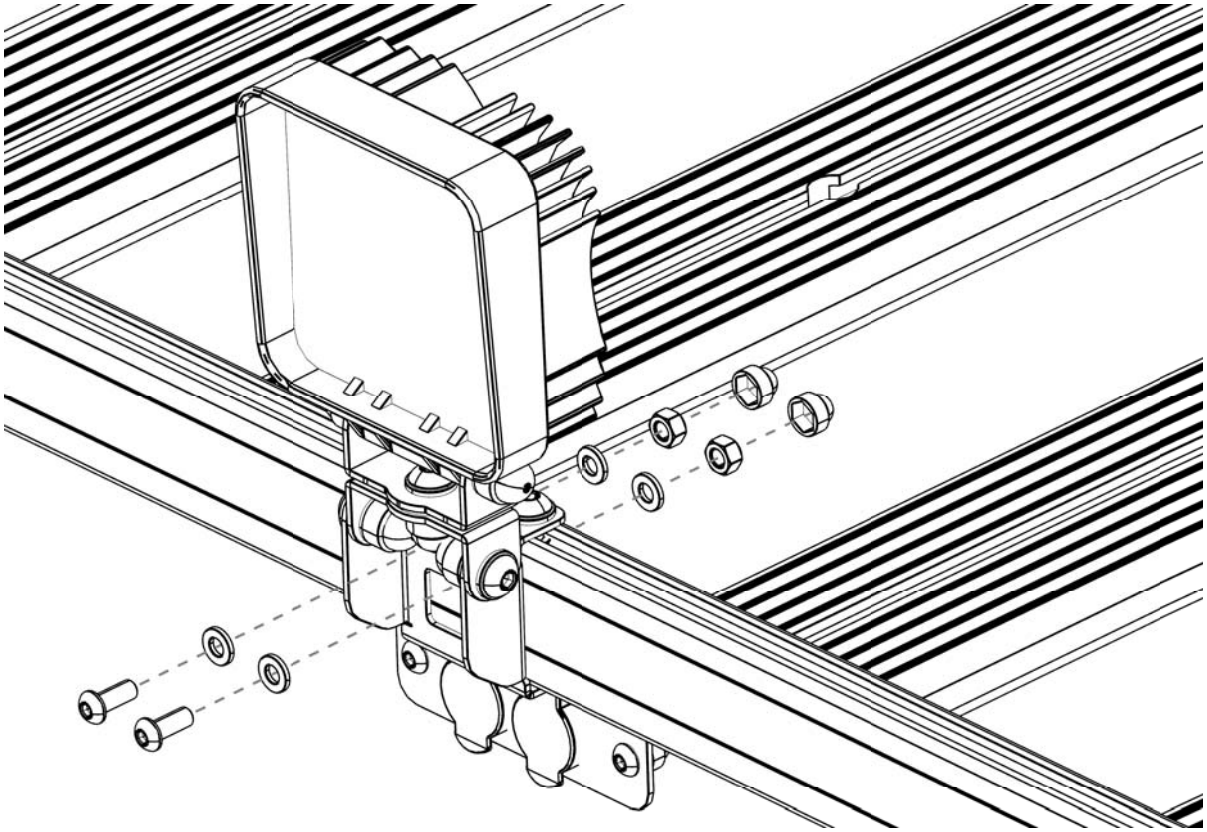

(C) Congratulations, you have completed your installation. Take a step back and admire your work. Good Job!

© COPYRIGHT 2015 FRONT RUNNER VEHICLE OUTFITTERS

7 ADJUSTING THE ANGLE

(A) **The Light is able to rotate at three points as indicated. Adjust each of the appropriate fasteners, so that they are loose enough allowing for the light to move when being adjusted by hand, but tight enough that no movement takes place under driving conditions.**

Place a M8 Nut Cap (Item 1) over each of the Nyloc Nuts and the M8 x 65 Hex Bolt.

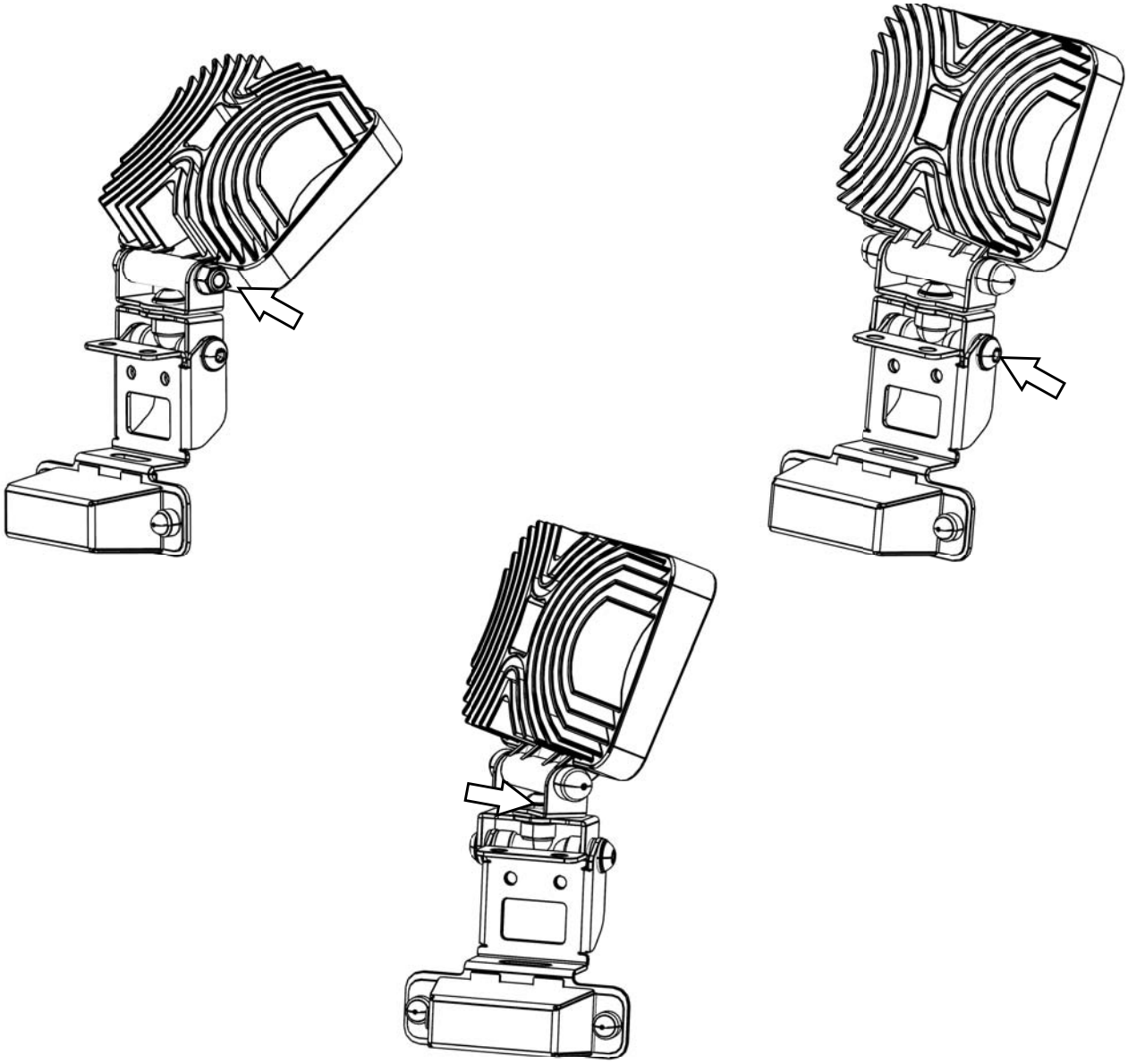

8 INSTALL OTHER VEHICLE AND RACK ACCESSORIES

(A) **Now's the time to visit your favorite Front Runner dealer in person or online.**

© COPYRIGHT 2015 FRONT RUNNER VEHICLE OUTFITTERS