FRONT RUNNER

ENG

LED 10" FLOODLIGHT UNIT

RRAC054 / RRAC058

INSTALL TIME: 1 Hour

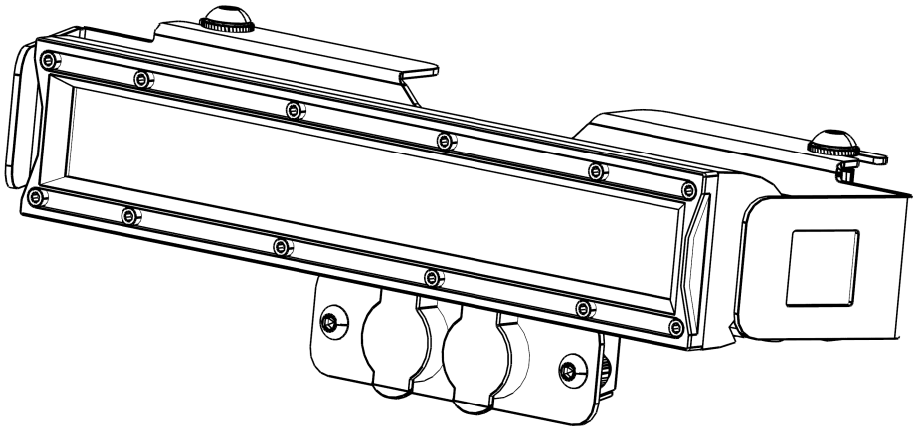

Depending on the type of installation chosen, not all components supplied will be used. Refer to Page 15 Section 8 on how to set the angle of the Floodlight.

IMPORTANT WARNING!

IT IS CRITICAL THAT ALL FRONT RUNNER PRODUCTS BE PROPERLY AND SECURELY ASSEMBLED AND ATTACHED TO YOUR VEHICLE. IMPROPER ATTACHMENT COULD RESULT IN AN AUTOMOBILE ACCIDENT, AND COULD CAUSE SERIOUS BODILY INJURY OR DEATH TO YOU OR TO OTHERS. YOU ARE RESPONSIBLE FOR ASSEMBLING AND SECURING ALL FRONT RUNNER PRODUCTS TO YOUR VEHICLE, CHECKING THE ATTACHMENTS PRIOR TO USE, AND PERIODICALLY INSPECTING THE PRODUCTS FOR ADJUSTMENT, WEAR, AND DAMAGE. THEREFORE, YOU MUST READ AND UNDERSTAND ALL OF THE INSTRUCTIONS AND CAUTIONS SUPPLIED WITH YOUR FRONT RUNNER PRODUCT PRIOR TO INSTALLATION OR USE. IF YOU DO NOT UNDERSTAND ALL OF THE INSTRUCTIONS AND CAUTIONS, OR IF YOU HAVE NO MECHANICAL EXPERIENCE AND ARE NOT THOROUGHLY FAMILIAR WITH THE INSTALLATION PROCEDURES, YOU SHOULD HAVE THE PRODUCT INSTALLED BY A PROFESSIONAL INSTALLER OR OTHER QUALIFIED PERSONNEL.

© COPYRIGHT 2014 FRONT RUNNER VEHICLE OUTFITTERS

1 GET ORGANIZED

Here is what you are looking at:

Item #	Quantity	Description
1	1	10" LED FLOODLIGHT
2	2	D-SHAPED NUT
3	6	M6 NYLOC NUT
4	2	MOUNTING ARM
5	2	M6 x 18 STAINLESS ALLEN CAP BOLT
6	2	M6 x 16 BUTTON HEAD BOLT
7	6	M6 FLAT WASHER
8	4	M8 x 20 BUTTON HEAD BOLT
9	6	M8 FLAT WASHER
10	4	M8 NYLOC NUT
11	4	M6 x 12 BUTTON HEAD BOLT
12	4	M6 NUT CAP
13	1	ELECTRICAL COVER
14	2	HELLA PLUG HEX NUT
15	1	EARTH PLATE
16	1	10" FLOODLIGHT MOUNTING BRACKET
17	2	HELLA PLUG
18	3	FLAG TERMINAL
19	3	INSULATING BOOT
20	1	RUBBER GROMMET
21	2	M8 x 30 BUTTON HEAD BOLT**

You will need:

- 13 mm Flat Wrench
- 4 mm Hex Key (Front/Rear Mounting Option)
- 5 mm Hex Key
- Side Cutter
- Wire Stripper
- Crimping Tool
- Tape Measure
- 6 mm Drill Bit (Slimline fitment only)
- Drill Machine (Slimline Fitment only)

*** Only used when mounting to Slimline Rack - Refer to Page 14**

**** Only used when mounting inline with a slat on a Slimline II Rack - Refer to Page 10 Step 3l**

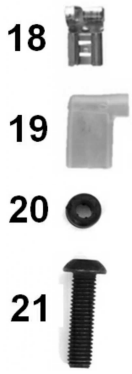

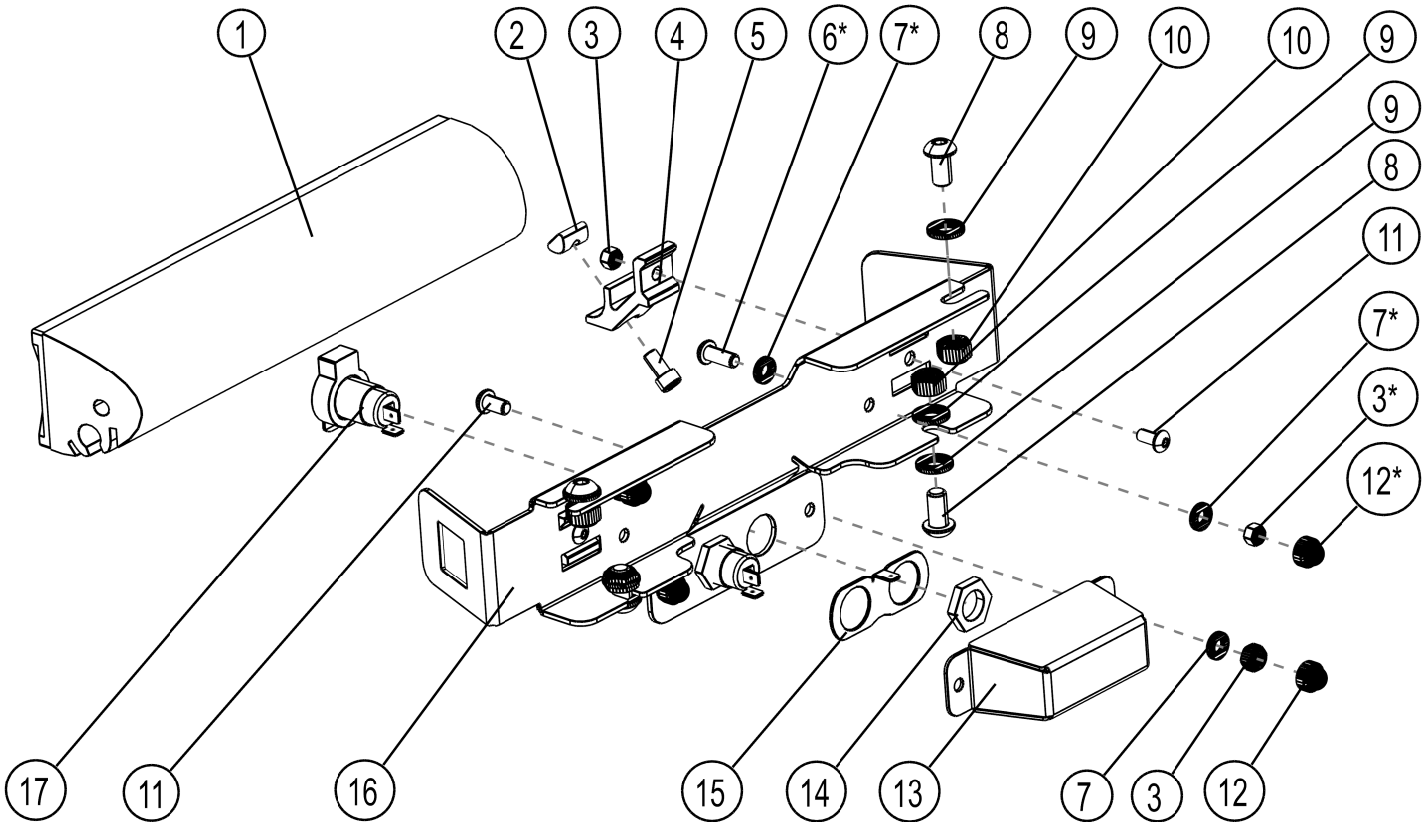

(A) **Familiarize yourself with the parts and then step away from the work area and read through these instructions from beginning to end. Take a moment as a little prep now may save you a lot of time later.**

© COPYRIGHT 2014 FRONT RUNNER VEHICLE OUTFITTERS

The 10" Floodlight may be wired and connected to the the vehicle's electrical system according to personal preferences and requirements. Steps 2A -2I below, illustrate Front Runners suggested method for wiring and connecting your 10" Floodlight to the vehicle's electrical system.

If the suggested method is selected, power to the Floodlight is supplied by running an Extension Cable (Not supplied) from a power outlet on the vehicle to one of the Hella Plugs found on the front of the Floodlight's mounting bracket (Refer to Pages 8 & 9, Steps 3F & 3G). Should you wish to purchase the Front Runner Extension Cable, the Part Number / Item Code is ECOM076.

2 PREPARE WIRING (SUGGESTED METHOD)

(A) Measure and cut the Floodlight's electrical cable to 300 mm. Keep the off-cut for Step 2C.

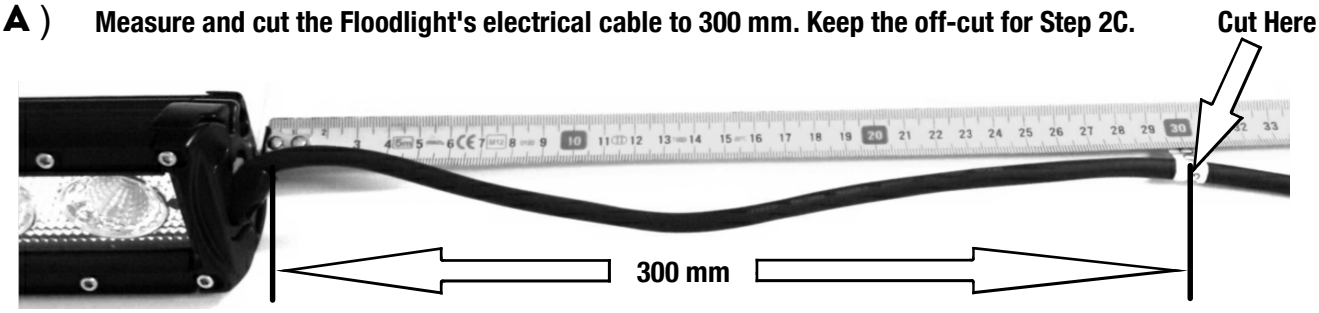

(B) Strip the black, outer insulation on the cut end of the electrical cable back 50 mm.

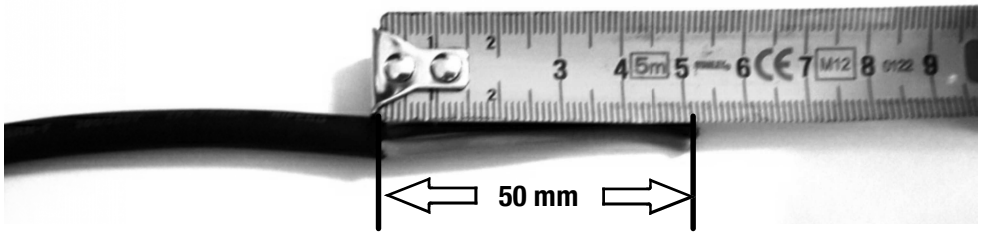

(C) From the off-cut in Step 2A, cut a section of wire 60 mm long. Strip off the black outer insulation. Keep the 60 mm length of RED wire and dispose of the remaining wire.

© COPYRIGHT 2014 FRONT RUNNER VEHICLE OUTFITTERS

2 PREPARE WIRING (SUGGESTED METHOD)... CONT

(D) **Strip one end of the insulation on the red wire from Step 2C back 5 mm and crimp the Flag Terminal (Item 18) to the wire as shown below.**

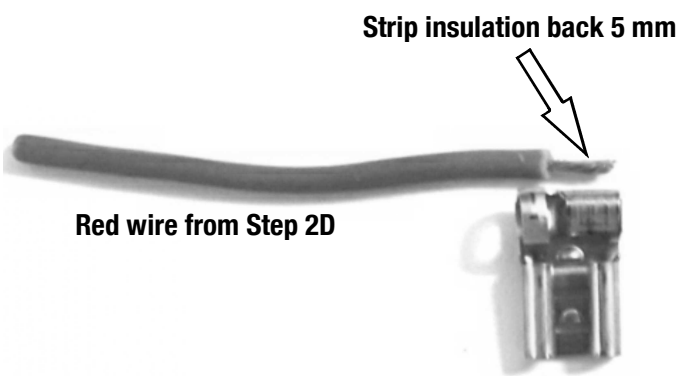

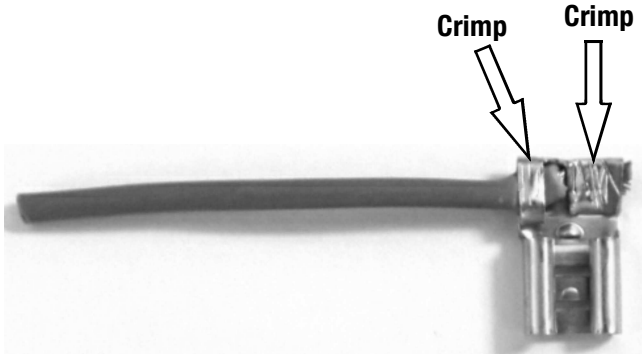

(E) **Fit an Insulating Boot (Item 19) over the crimped Flag Terminal as shown below.**

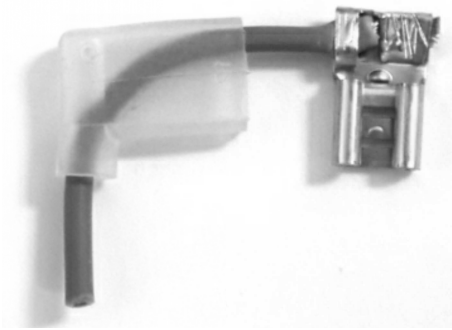

(F) **Insert the Rubber Grommet (Item 20) into the whole in the Electrical Cover (Item 13) as shown**

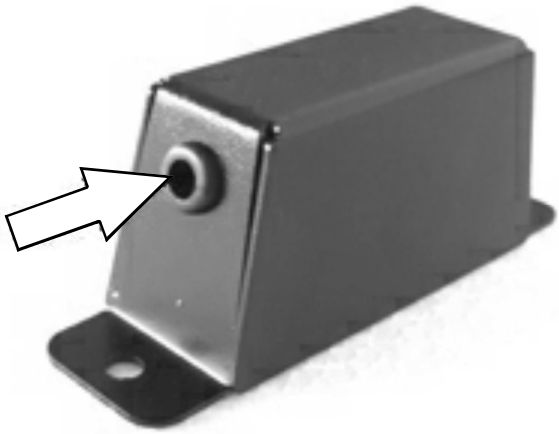

© COPYRIGHT 2014 FRONT RUNNER VEHICLE OUTFITTERS

2 PREPARE WIRING (SUGGESTED METHOD)... CONT

(G) **Feed the Floodlight's electrical cable through the the hole in the Rubber Grommet inserted in Step 2F as shown below.**

(H) **Following the steps below, strip and twist the red wires together as shown.**

Strip back the insulation by 10 mm on the RED wire of lights power cable.

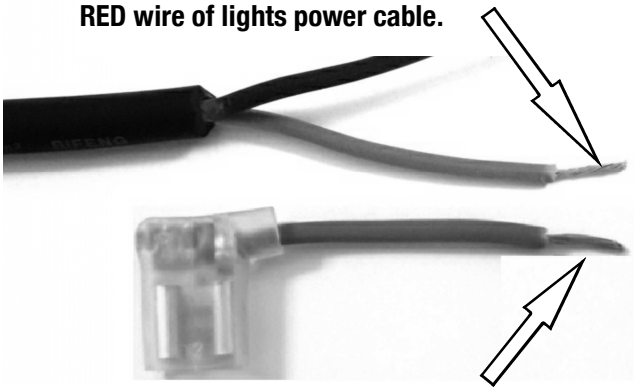

From Step 2E, strip insulation back 10 mm on opposite end to Flag terminal.

Twist together

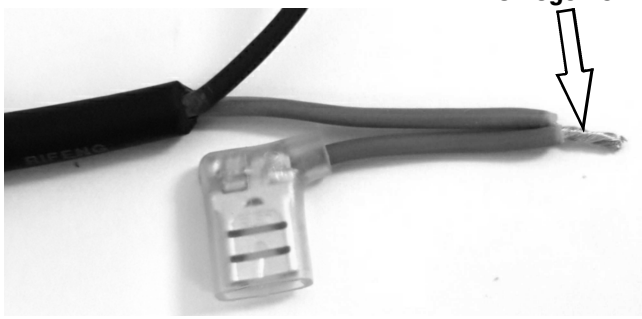

© COPYRIGHT 2014 FRONT RUNNER VEHICLE OUTFITTERS

2 PREPARE WIRING (SUGGESTED METHOD)... CONT

(I) Slide an Insulating Boot (Item 19) over the twisted pair of red wires from Step 2H and crimp a Flag Terminal (Item 18) onto the end of the twisted pair as shown.

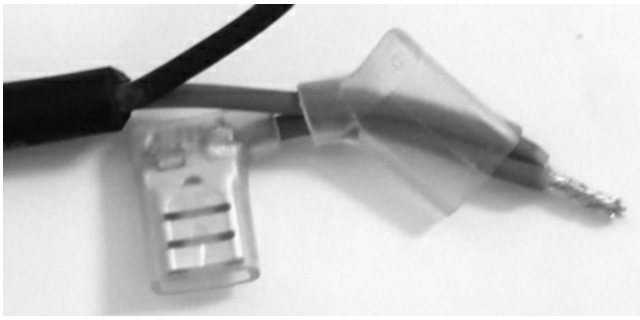

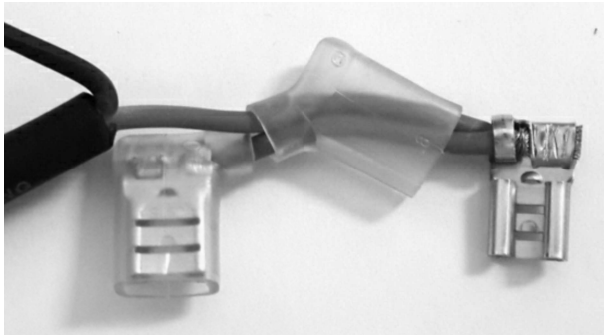

(J) Slide the Insulating Boot over the Flag Terminal from Step 2I as shown.

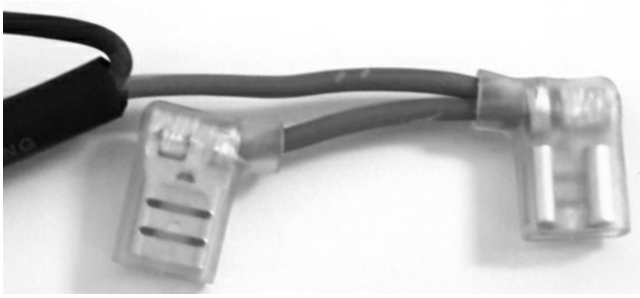

(K) Slide the last remaining Insulating Boot over the black wire on the lights power cable as shown. Strip back 5 mm of insulation from the end of the black wire. Crimp the last remaining Flag Terminal onto the end of the black wire and cover the Flag Terminal with the Insulating Boot.

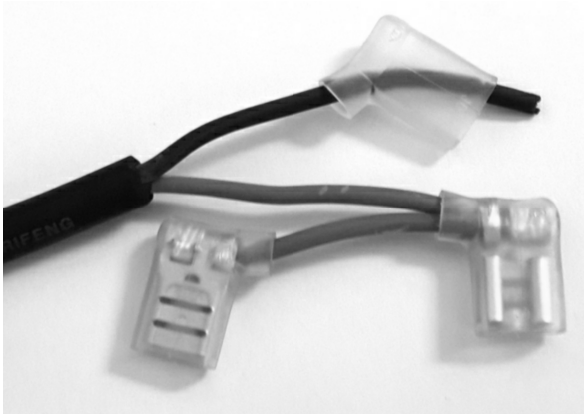

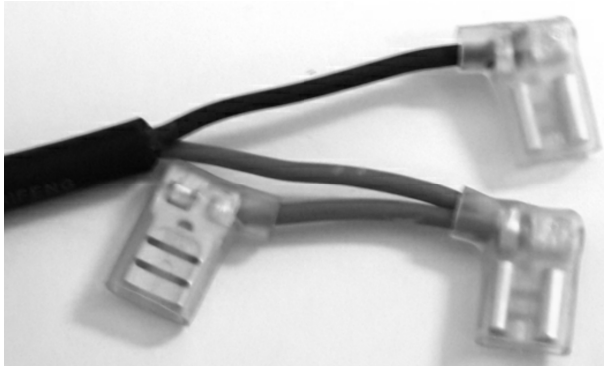

If you have a Slimline Rack, please turn to Page 13.

© COPYRIGHT 2014 FRONT RUNNER VEHICLE OUTFITTERS

3 PREPARE FOR LIGHT INSTALL

(A) **Fit the two Mounting Arms (Item 4) to the outer mounting positions found at either end of the Light Mounting Bracket (Item 16) using the two M6 x 12 Button Head Bolts and M6 Nyloc Nuts (Items 3 & 11). The Mounting Arms must face down as shown.**

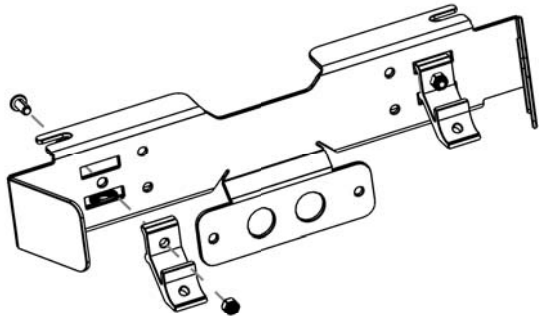

DO NOT US THE RUBBER MOUNTS SUPPLIED WHEN USING THE FRONT RUNNER BRACKET

(B) **Insert the D-Shaped Nut (Item 2) into each end of the light as shown. The domed side of the nut must go to the outside of the light.**

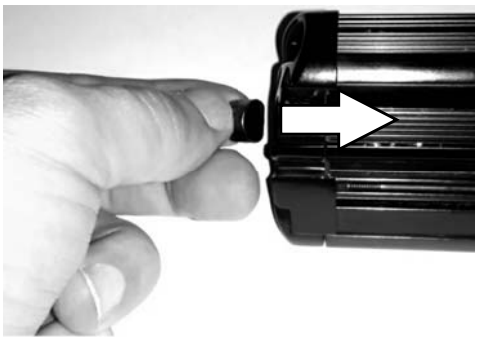

(C) **Place the Mounting Bracket (Item 16) over the Floodlight, making sure that the electrical cable is on the right. Align the D-Shaped Nuts, inserted in Step 3B, with the Mounting Arms fitted in Step 3A and secure the Floodlight to the Mounting Bracket using two of the M6 x 18 Stainless Steel Allen Cap Bolts (Item 5). This Assembly, as shown below, will be referred to as the Floodlight Unit for the remainder of these instructions.**

© COPYRIGHT 2014 FRONT RUNNER VEHICLE OUTFITTERS

3 PREPARE FOR LIGHT INSTALL

(D) Looking at the two Hella Plugs (Item 17), cut off the outer "tab" on each using a pair of side cutters.

DO NOT CUT OFF THE MIDDLE TAB

(E) Bend the "tab" on the Earth Plate (Item 15) to 90 degrees as shown below.

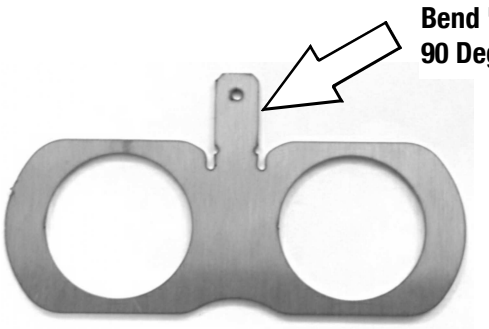

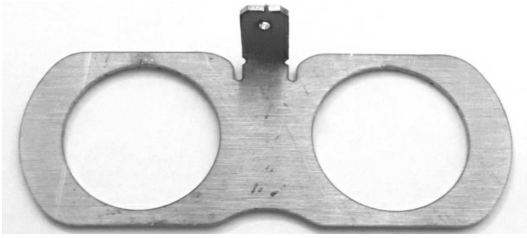

(F) Remove the Hex Nut (Item 14) from the back of each Hella Plug and secure the Earth Plate and Hella Plugs to the Mounting Bracket (Item 16) as shown.

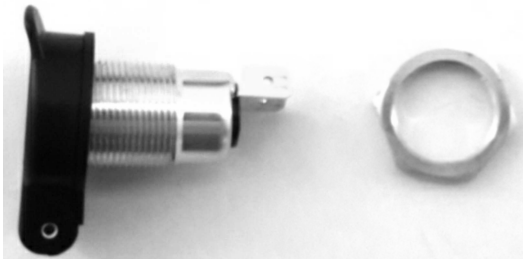

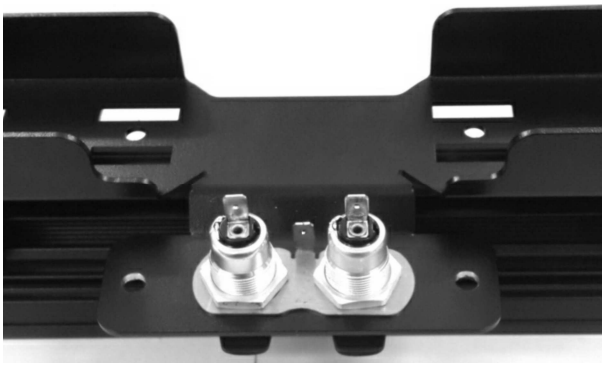

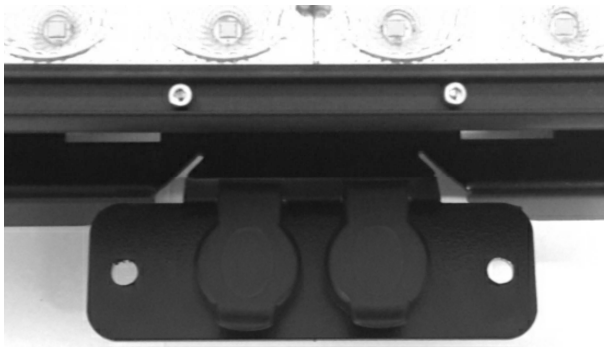

© COPYRIGHT 2014 FRONT RUNNER VEHICLE OUTFITTERS

3 PREPARE FOR LIGHT INSTALL

(G) **Connect the Floodlight to the Hella Plugs as shown below. The two red wires go onto the center "tabs" of the Hella Plugs and the black wire goes onto the "tab" on the Earth Plate.**

Red Wire to "tab" in center of Hella Plug

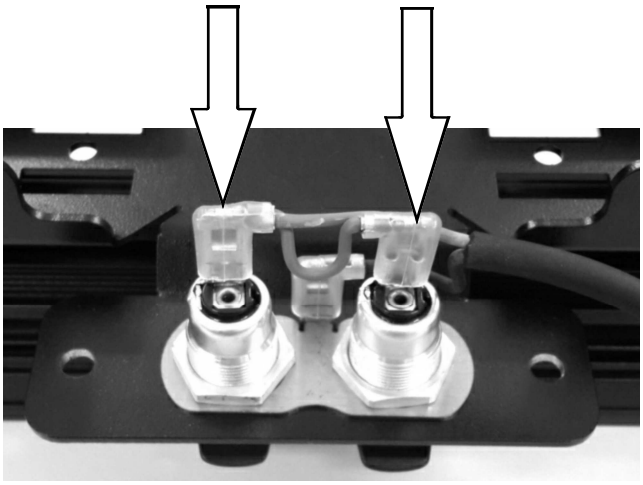

Black wire to "tab" on Earth Plate

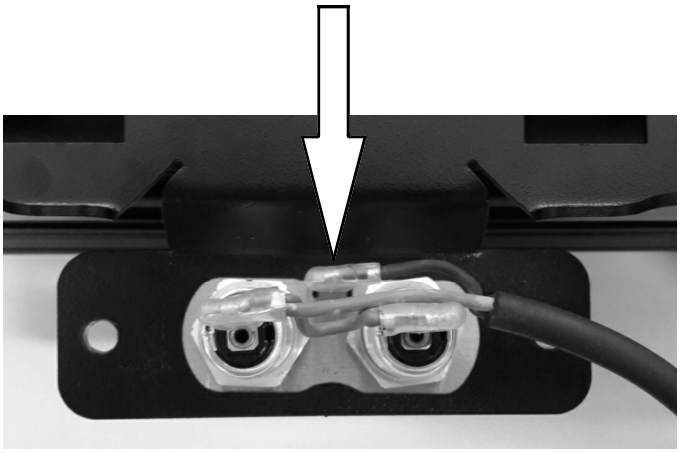

(H) **Fit the Electrical Cover (Item 13) Over the rear of the Hella Plugs and electrical connections and secure in place using two M6 x 12 Button Head Bolts, tow M6 Flat Washers and two M6 Nyloc Nuts (Items 3, 7, 11). Place a M6 Nut Cap (Item 12)over each of the Nyloc Nuts.**

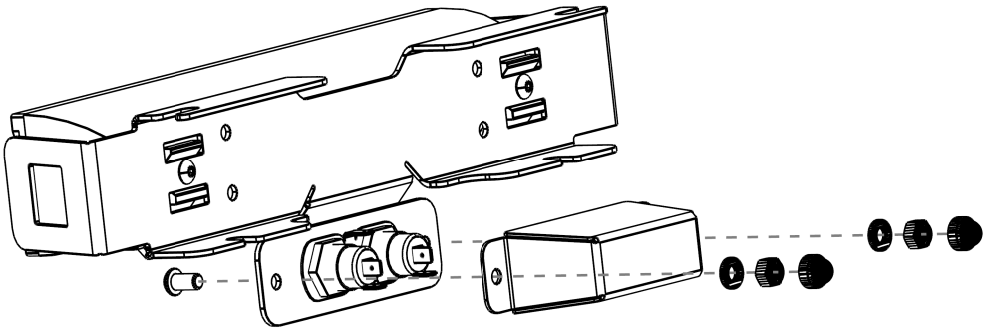

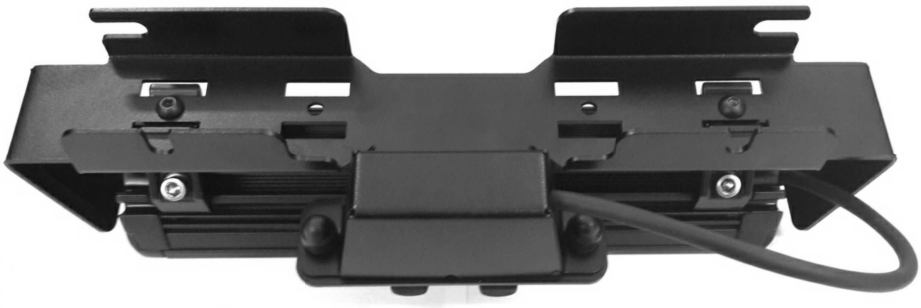

© COPYRIGHT 2014 FRONT RUNNER VEHICLE OUTFITTERS

3 PREPARE FOR LIGHT INSTALL

(I) **The Floodlight Unit may be mounted on the front, rear, left or right hand side of your Rack. When mounting on the side of the rack, the Floodlight Unit may be mounted inline with a slat (recommended) or between two slats as shown below. Decide where you would like to mount your Floodlight Unit. Ensure that there is enough clearance between the Floodlight Unit and vehicle. If your vehicle's rear door opens upwards and you wish to mount the Floodlight Unit on the rear of the Rack, you will need to check the clearance between the Floodlight Unit and the vehicle with the rear door in the open position.**

For Side Mounting inline with a slat, refer to Section 4. For Side Mounting between two slats, refer to Section 5. For Font/Rear Mounting, refer to Section 6.

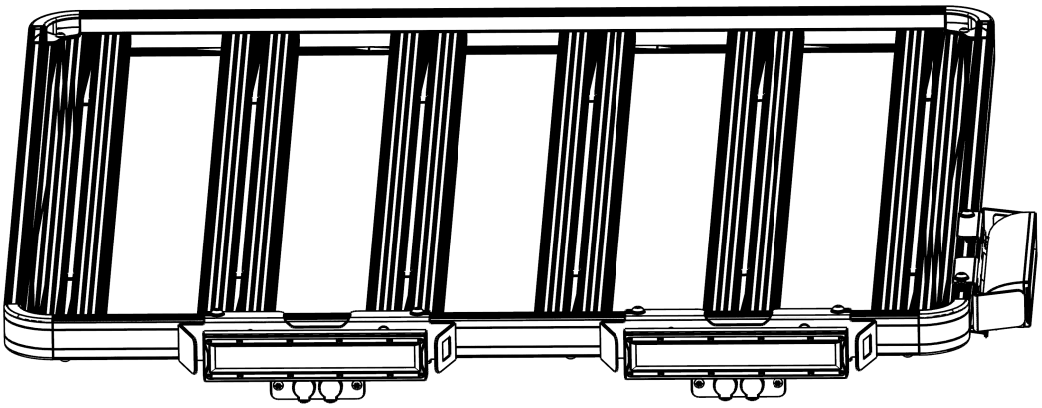

Mounting in the front or rear
(Refer to Page 12 - Section 6)

Mounting between two slats
(Refer to Page 11 - Section 5)

Mounting inline with a slat
(Refer to Page 10 - Section 4)

© COPYRIGHT 2014 FRONT RUNNER VEHICLE OUTFITTERS

4 SIDE MOUNTING INLINE WITH A SLAT

(A) **Decide on which side of the Rack you would like to install the Floodlight Unit.**

On the chosen side, slide two M8 Nyloc Nuts (Item 10) dome side down into the U-channel through the gap in the corner of the Tray as shown. Slide the two Nyloc Nuts down the U-channel and into position either side of the chosen slat as shown.

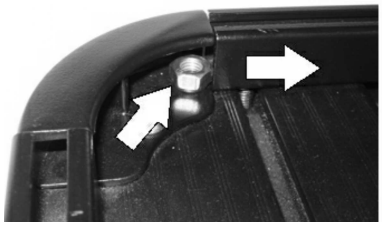

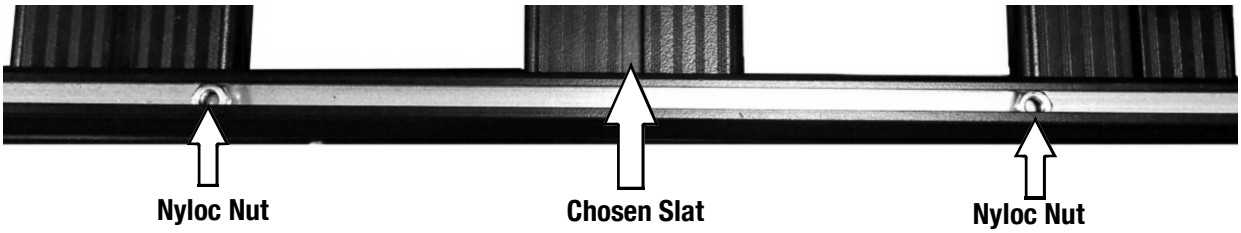

(B) **Looking underneath the Rack, place the Floodlight Unit over the side of the Rack (Hella Plugs facing down). Line up the slots in the Floodlight Unit with the holes in the side of the Rack (One either side of the chosen slat). Secure the Floodlight Unit to the Rack using two M8 x 20 Button Head Bolts, four M8 Flat Washers and two Nyloc Nuts (Items 8, 9 & 10) supplied.**

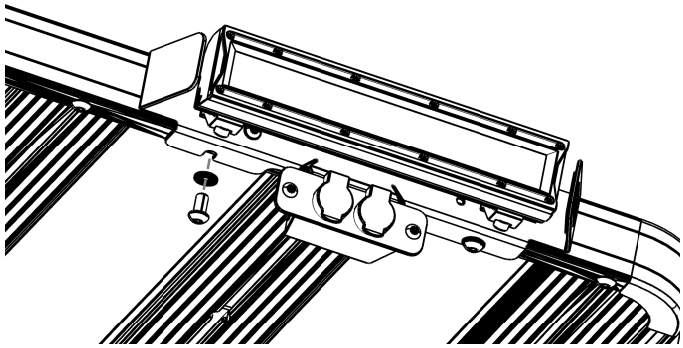

(C) **Working from the top of the Rack, slide the two M8 Nyloc Nuts from Step 4A underneath the Floodlight Unit, lining the nuts up with the mounting slots either end of the Floodlight Unit. Secure the top of the Floodlight Unit to the Rack using two M8 x 20 Button Head Bolts and two Flat Washers (Items 8 & 9) and the Nyloc Nuts.**

Congratulations, you have completed your installation. Take a step back and admire your work. Good Job!

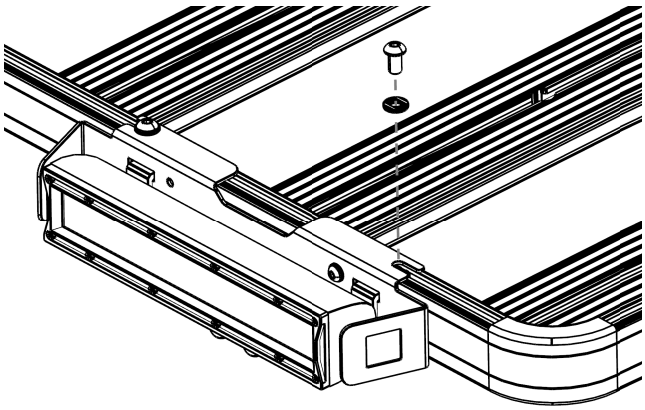

© COPYRIGHT 2014 FRONT RUNNER VEHICLE OUTFITTERS

5 SIDE MOUNTING BETWEEN TWO SLATS

(A) Decide on which side of the Rack you would like to install the Floodlight Unit. On the chosen side, slide three M8 Nyloc Nuts (Item 10) dome side down into the U-channel through the gap in the corner of the Rack as shown. Slide the three Nyloc Nuts down the U-channel and into position as shown below.

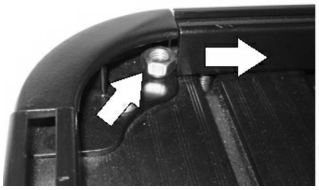

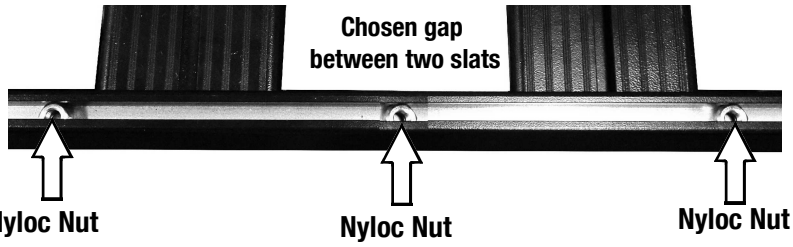

(B) Looking underneath the Rack, loosen and remove the two M8 Button Head Bolts (One either side of the chosen gap) that secure the two slats to the side of the Rack. Place the Floodlight Unit over the side of the Rack (Hella Plugs facing down).

Line up the mounting slots either end of the Floodlight Unit with the M8 Bolt Holes (From the two Button Head Bolts removed earlier) and secure the Floodlight Unit to the Rack using the two M8 x 30 Button Head Bolts and two M8 Flat Washers (Items 9 & 21) supplied.

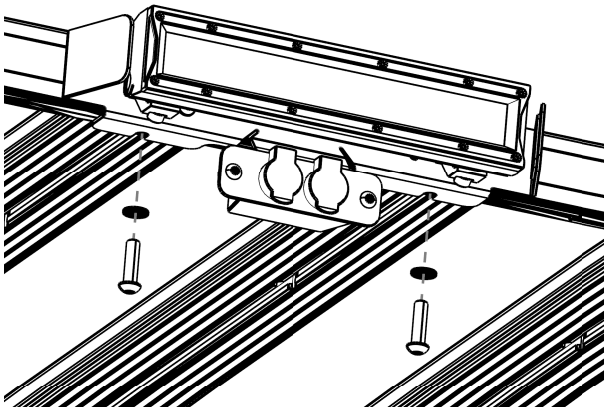

(C) Working from the top of the Rack, slide the two M8 Nyloc Nuts from Step 5A underneath the Floodlight Unit, lining them up with the mounting slots either end of the Floodlight Unit. Secure the top of the Floodlight Unit to the Rack using two M8 x 20 Button Head Bolts and two Flat Washers (Items 8 & 9) and the Nyloc Nuts.

Congratulations, you have completed your installation. Take a step back and admire your work. Good Job!

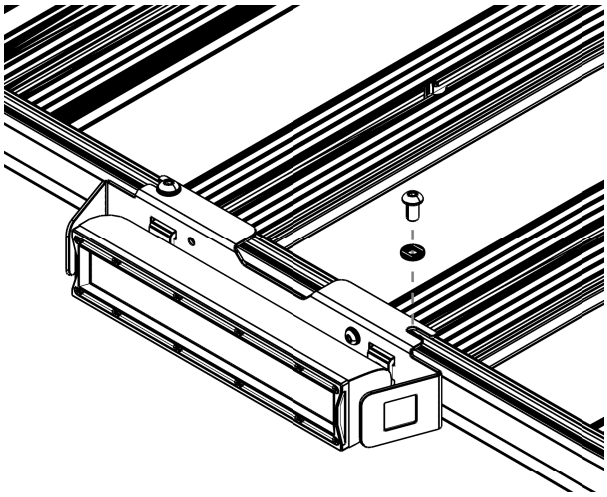

© COPYRIGHT 2014 FRONT RUNNER VEHICLE OUTFITTERS

6 FRONT / REAR MOUNTING

(A) When mounting on the front or rear of the Rack, remove one of the appropriate corners by loosening the M6 Button Head Bolt (as indicated by the arrow) and pulling the Corner free from the Rack.

Insert two M8 Nyloc Nuts (Item 10) into each of the "U"-channels as shown.

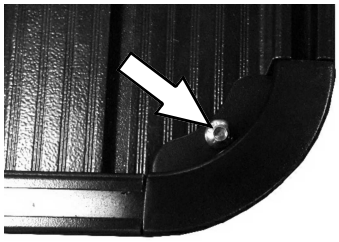

2 x Nyloc Nuts - Dome side facing down

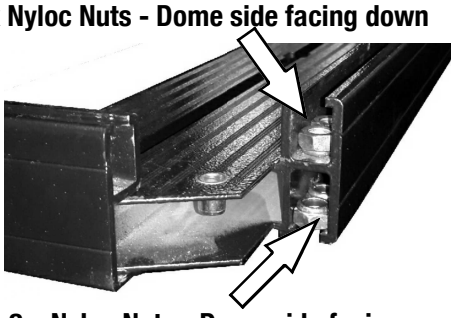

2 x Nyloc Nuts - Dome side facing up

(B) Place the Floodlight Unit over the Rack (Hella Plugs facing down) in the desired position. Slide the M8 Nyloc Nuts inserted in Step 6A down the "U"-channels and lining both the top and bottom sets of nuts up with the mountings slots either end of the Floodlight Unit.

Secure the Floodlight Unit, both top and bottom four M8 x20 Button Head Bolts and four M8 Flat Washers (Items 9 & 10) supplied. Refit the corner removed in Step 6A.

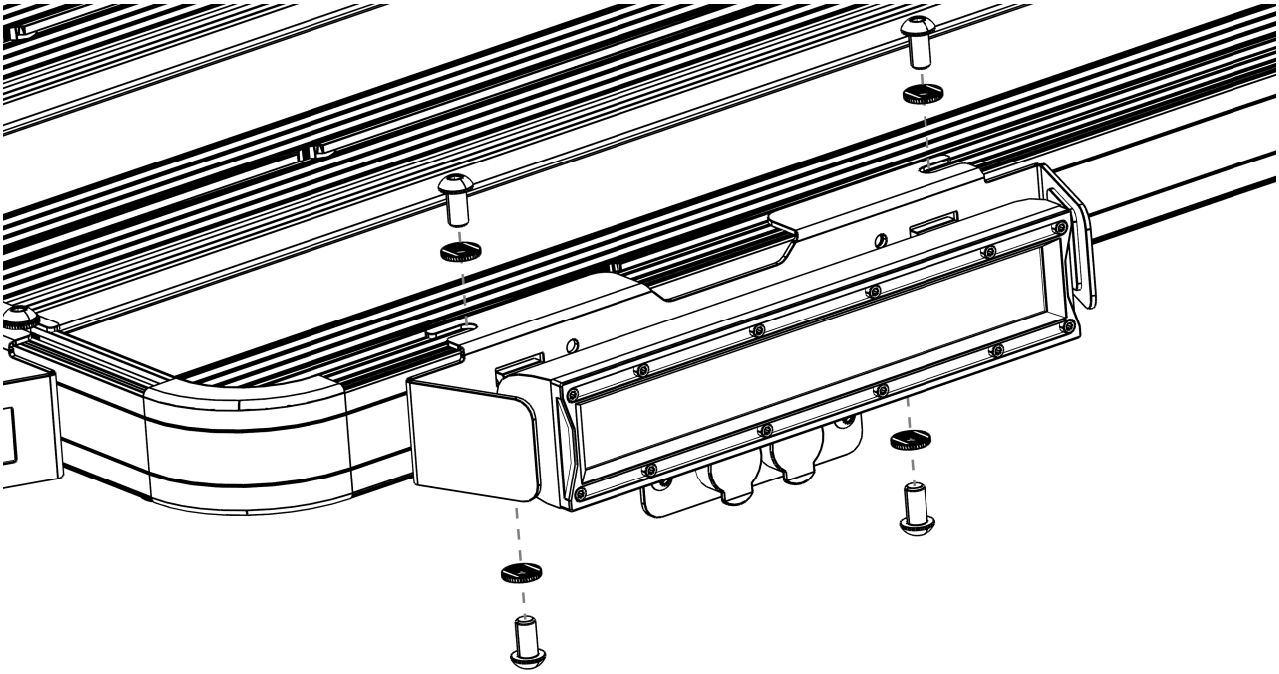

(C) Congratulations, you have completed your installation. Take a step back and admire your work. Good Job!

© COPYRIGHT 2014 FRONT RUNNER VEHICLE OUTFITTERS

7 INSTALL FLOODLIGHT - SLIMLINE RACK

(A) **Place the Floodlight Bracket over the side of the rack (Hella Plug cut-outs facing down) in the desired position. Mark the position of hole set "A" or "B" onto the side of the Rack. Remove the Floodlight Bracket and drill a 6 mm hole on each of your two markings.**

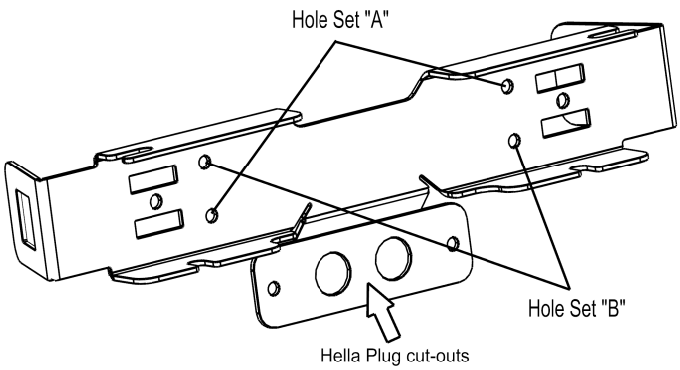

(B) **Complete Steps 3A to 3H (Pages 7-9).**

(C) **Place the Floodlight Unit onto the Rack (Hella Plugs facing down), lining the holes in the Floodlight Unit up with the holes drilled in Step 7A. Secure the Floodlight Unit to the Rack using two M6 x 20 Button Head Bolts, Four M6 Flat Washers and two M6 Nyloc Nuts (Items 3, 6, 12). The Nyloc Nuts and two of the Washers go on the inside of the Rack. Once Secure place a M6 Nut Cap (Item 12) over each of the Nyloc Nuts.**

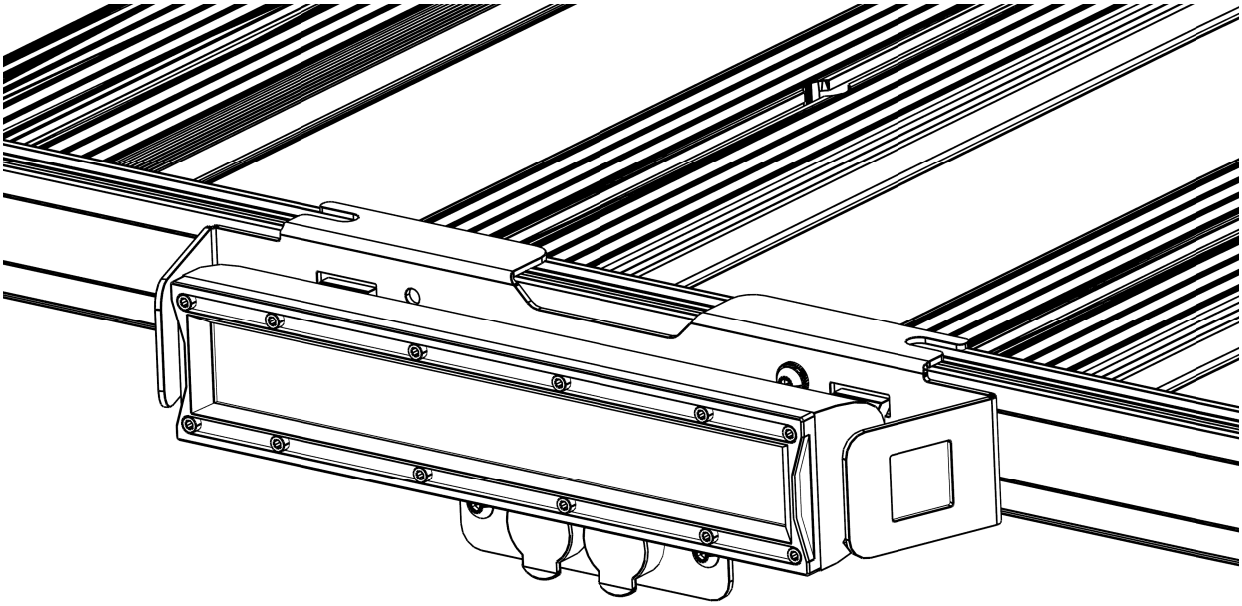

(C) **Congratulations, you have completed your installation. Take a step back and admire your work. Good Job!**

© COPYRIGHT 2014 FRONT RUNNER VEHICLE OUTFITTERS

8 ADJUSTING THE ANGLE

You will need:
5 mm Hex Key

(A) **Loosen the two M6 Bolts (as indicated by the arrows) enough to allow the Floodlight to rotate and adjust the Floodlight up or down until the desired angle has been achieved. Tighten the two M6 Bolts**

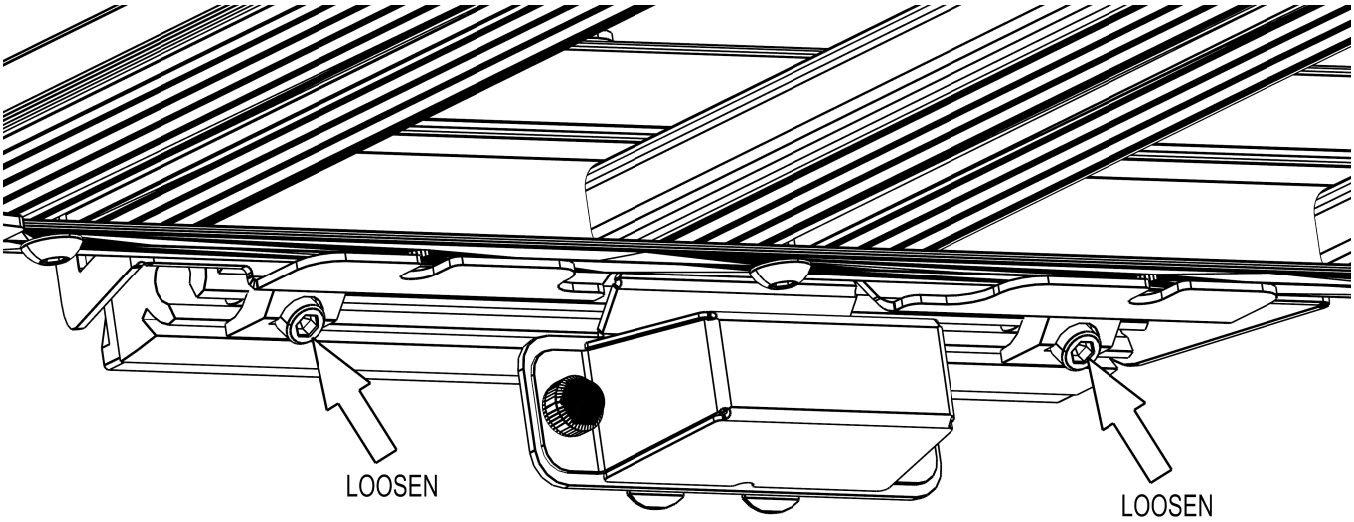

9 INSTALL OTHER VEHICLE AND RACK ACCESSORIES

(A) **Now's the time to visit your favorite Front Runner dealer in person or online.**

© COPYRIGHT 2014 FRONT RUNNER VEHICLE OUTFITTERS