FRONT RUNNER

HOWLING MOON AWNING BRACKET

ENG

RRAC043

INSTALL TIME: 30 mins

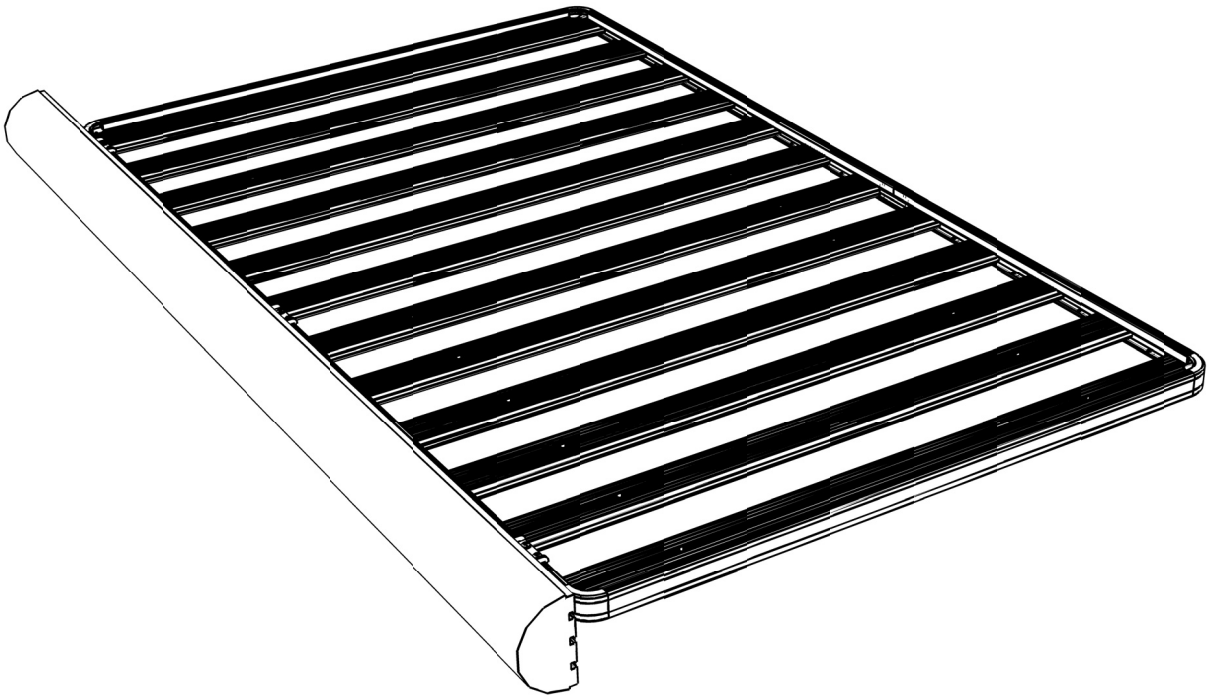

IMPORTANT WARNING!

IT IS CRITICAL THAT ALL FRONT RUNNER PRODUCTS BE PROPERLY AND SECURELY ASSEMBLED AND ATTACHED TO YOUR VEHICLE. IMPROPER ATTACHMENT COULD RESULT IN AN AUTOMOBILE ACCIDENT, AND COULD CAUSE SERIOUS BODILY INJURY OR DEATH TO YOU OR TO OTHERS. YOU ARE RESPONSIBLE FOR ASSEMBLING AND SECURING ALL FRONT RUNNER PRODUCTS TO YOUR VEHICLE, CHECKING THE ATTACHMENTS PRIOR TO USE, AND PERIODICALLY INSPECTING THE PRODUCTS FOR ADJUSTMENT, WEAR, AND DAMAGE. THEREFORE, YOU MUST READ AND UNDERSTAND ALL OF THE INSTRUCTIONS AND CAUTIONS SUPPLIED WITH YOUR FRONT RUNNER PRODUCT PRIOR TO INSTALLATION OR USE. IF YOU DO NOT UNDERSTAND ALL OF THE INSTRUCTIONS AND CAUTIONS, OR IF YOU HAVE NO MECHANICAL EXPERIENCE AND ARE NOT THOROUGHLY FAMILIAR WITH THE INSTALLATION PROCEDURES, YOU SHOULD HAVE THE PRODUCT INSTALLED BY A PROFESSIONAL INSTALLER OR OTHER QUALIFIED PERSONNEL.

© COPYRIGHT 2016 FRONT RUNNER VEHICLE OUTFITTERS

1 GET ORGANIZED

Note: If you assemble the Awning Brackets to the Frontrunner Slimline II Rack you will not require all the supplied fasteners. These will be used only if you have a Frontrunner Slimline Rack.

SLIMLINE II RACK (STEPS 2A-C)

Here is what you are looking at:

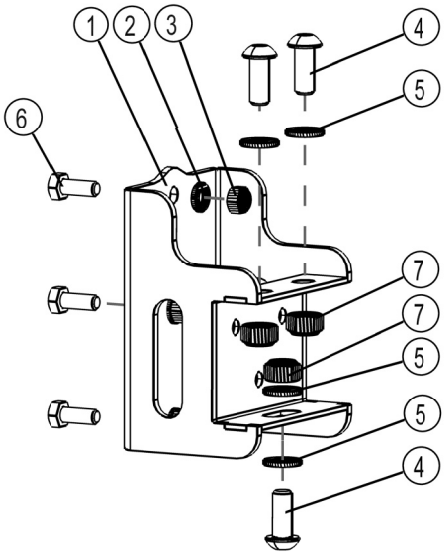

You will need:

- 10mm Flat and Socket Wrench
- 13mm Flat and Socket Wrench
- 5mm Hex Key
- Ladder
- Friend

Item #	Qty	DESCRIPTION
1	3	MOUNTING BRACKET
2	9	M6 FLAT WASHER
3	9	M6 NYLOC NUT
4	9	M8 x 25 BUTTON HEAD BOLT
5	12	M8 FLAT WASHER
6	9	M6 x 16 HEX BOLT
7	9	M8 NYLOC NUT

SLIMLINE RACK (STEPS 3A-C)

Here is what you are looking at:

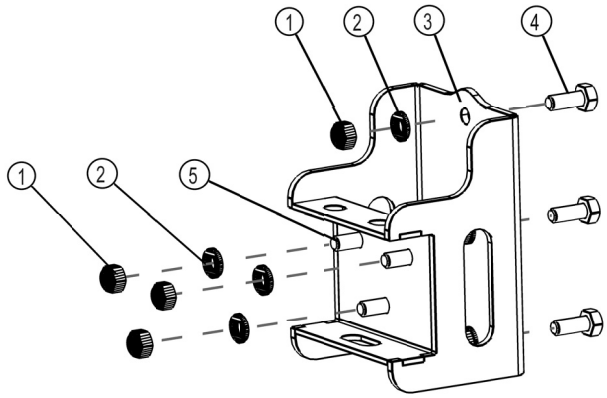

You will need:

- 10mm Flat and Socket Wrench
- Drill machine
- 6.5mm Drill Bit
- White Marking Pen
- Ladder
- Friend

Item #	Quantity	Description
1	18	M6 NYLOC NUT
2	18	M6 FLAT WASHER
3	3	MOUNTING BRACKET
4	9	M6 x 16 HEX BOLT
5	9	M6 x 16 HEX BOLT & M6 FLAT WASHER

(A) Familiarize yourself with the parts and then step away from the work area and read through these instructions from beginning to end. Take a moment as a little prep now may save you a lot of time later.

© COPYRIGHT 2016 FRONT RUNNER VEHICLE OUTFITTERS

2 INSTALL AWNING BRACKETS TO SLIMLINE II RACK

(A) **Decide on which side of the Slimline II Tray you would like to install the Awning.**

On the chosen side, slide six M8 Nyloc Nuts (Item 7) dome side down into the T-slot channel through the gap in the corner of the Tray as shown. Two M8 Nyloc Nuts will be used for each Awning Bracket. Spacing of the Nyloc Nuts will depend on the length of the Tray and the Awning. The Awning Brackets must be positioned between two Slats.

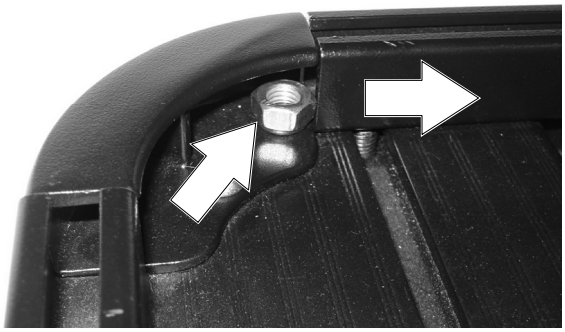

(B) **On the back of the Awning, slide three M6 x 16 Hex Bolts (Item 6) into the top, middle and bottom extrusion slots as shown.**

Place the Awning Brackets (item 1) over the M6 x 16 Hex Bolts (three per bracket) and loosely secure the Brackets to the Awning using nine M6 Flat Washers and nine M6 Nyloc Nut (Items 3 & 4) and space the Brackets as required.

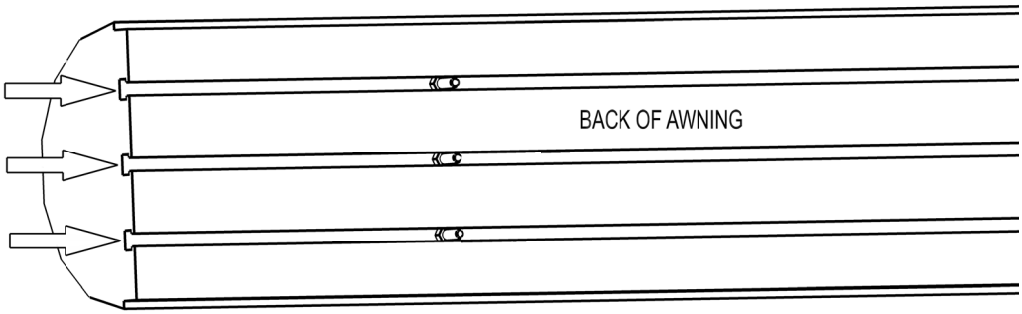

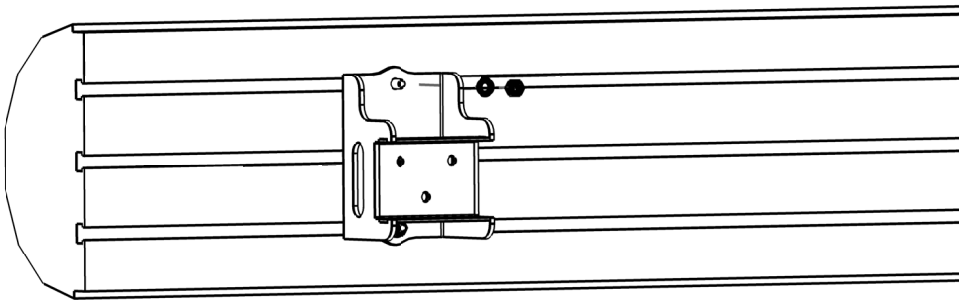

© COPYRIGHT 2016 FRONT RUNNER VEHICLE OUTFITTERS

2 INSTALL AWNING BRACKETS TO SLIMLINE II RACK...CONT.

(C) Position the Awning onto the Slimline II Rack with the help of a friend. Working from underneath, position the Awning Brackets so that they sit between two slats. Line up the holes in the bottom of the Brackets with the holes in the Side Profile and secure the Brackets in position using three M8 x 20 Button Head Bolts, three M8 Flat Washers and three M8 Nyloc Nuts (Items 4, 5, 7).

Secure the top of the Brackets to the Rack using six M8 Flat Washers and six M8 x 20 Button Head Bolts (Items 4 & 5). The Bolts are fastened into the M8 Nyloc Nuts inserted in Step 2A.

Position the Awning left to right as desired and tighten the nine M6 Nyloc Nuts from Step 2B.

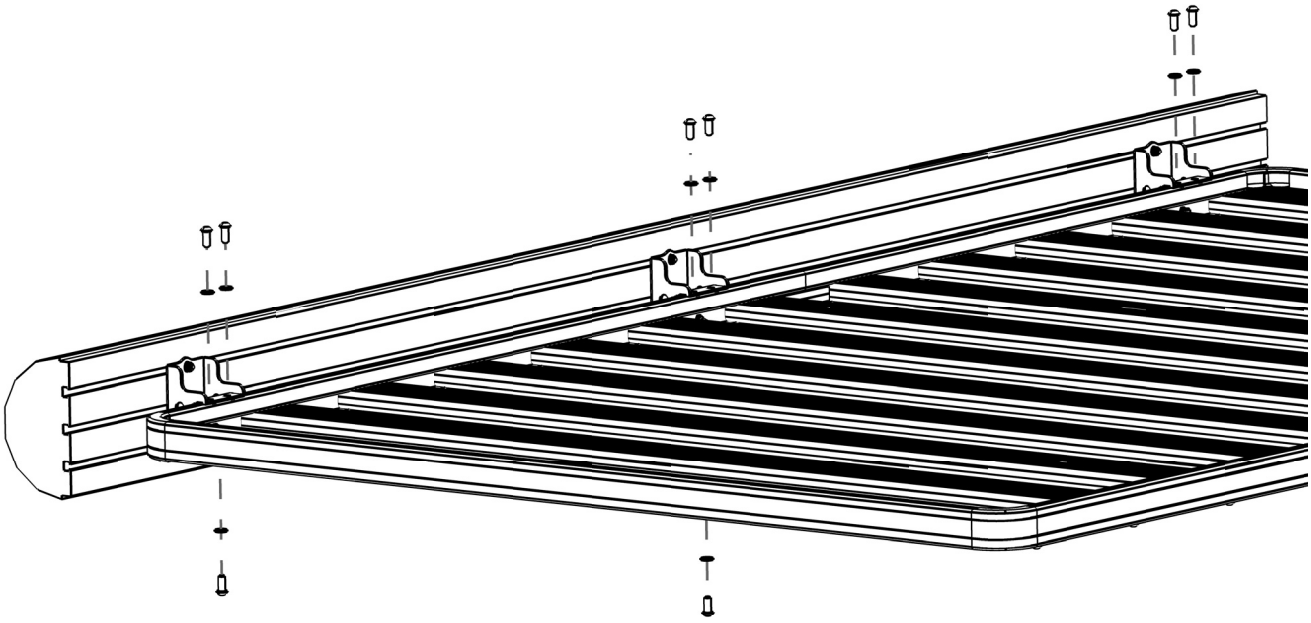

(D) Congratulations, you have completed your installation. Take a step back and admire your work. Good Job!

3 INSTALL AWNING BRACKETS TO SLIMLINE RACK

(A) Decide which side of the Slimline Rack you would like to install the Awning.

On the chosen side, place the two Awning Brackets (Item 1) on either end of the Rack. The Brackets must sit between two slats. Place the third Bracket in the center. Ensure that the two holes in the bracket are at the top. Using a white marking pen, mark the position of the holes,as indicated by the arrows, onto the Rack and remove the Brackets.

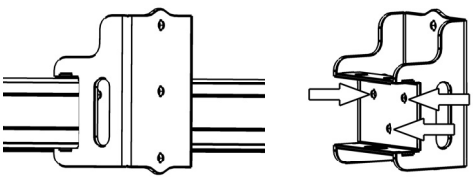

© COPYRIGHT 2016 FRONT RUNNER VEHICLE OUTFITTERS

3 INSTALL AWNING BRACKETS TO SLIMLINE RACK

(B) **Drill a 6.5mm hole on each marked positions.**

Place the Awning Brackets back on the Basket, lining up the holes in the bracket with the holes you just drilled. Secure the Brackets to the Rack using nine M6 x 16 Hex Bolts, eighteen M6 Flat Washers and nine M6 Nyloc Nuts (items 1, 2 & 5).

(C) **On the back of the Awning, slide three M6 x 16 Hex Bolts (item 4) into the top, middle and bottom extrusion slots as shown.**

With the help of a friend, lift the Awning up and move towards the Basket lining up the bolts in the Awning with the holes in the Brackets. Loosely fasten the Awning to the Brackets using the nine M6 Flat Washers and nine M6 Nyloc Nuts (items 1 & 2). Position the Awning left to right as desired and tighten the M6 Nyloc Nuts.

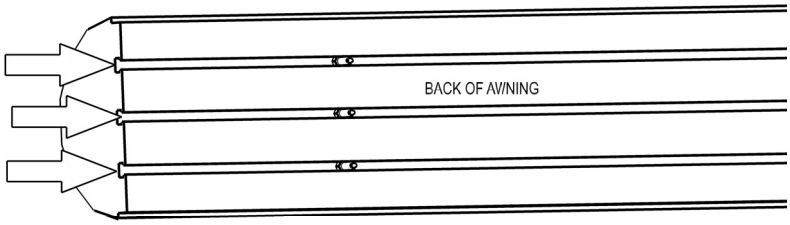

(D) **Congratulations, you have completed your installation. Take a step back and admire your work. Good Job!**

4 INSTALL OTHER VEHICLE AND RACK ACCESSORIES

(A) **Now's the time to visit your favourite Front Runner dealer in person or online.**

© COPYRIGHT 2016 FRONT RUNNER VEHICLE OUTFITTERS