FRONT RUNNER
DOMETIC

Ford Ranger T6 (2019-2023) (PBFR003)

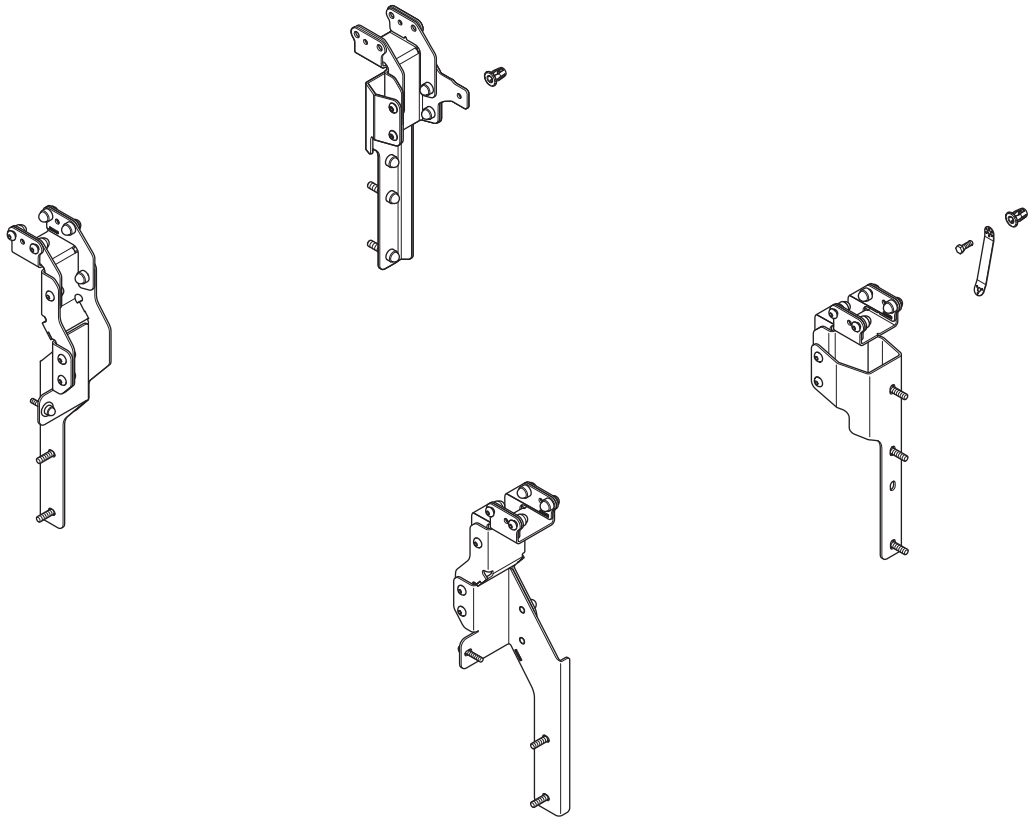

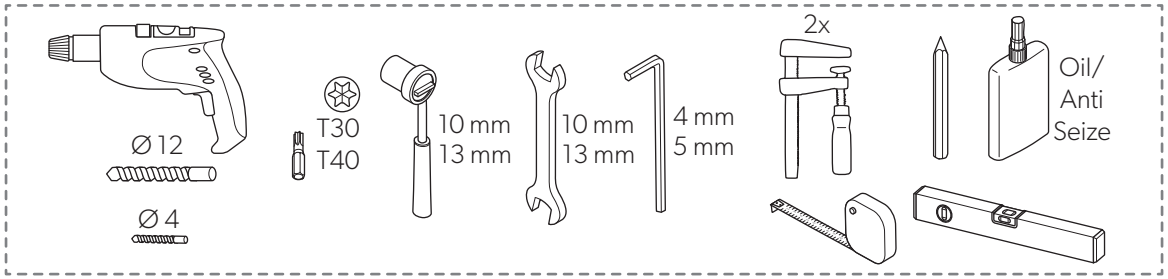

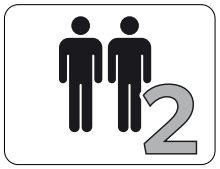

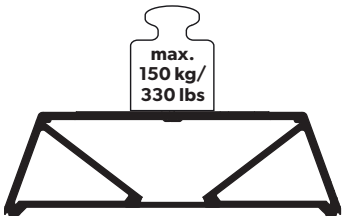

PBFR003

1	2	3	4
28x	36x	14x	2x
M8 x 20	M8	M8 x 19 x 2	M6 x 20 x 2

5	6	7	8	9	10	11	12
3x	10x	2x	2x	4x	46x	4x	1x
M6 x 30	M8 x 30	M6 x 20	M8	M6	M8	M8 x 25	Jack nut tool

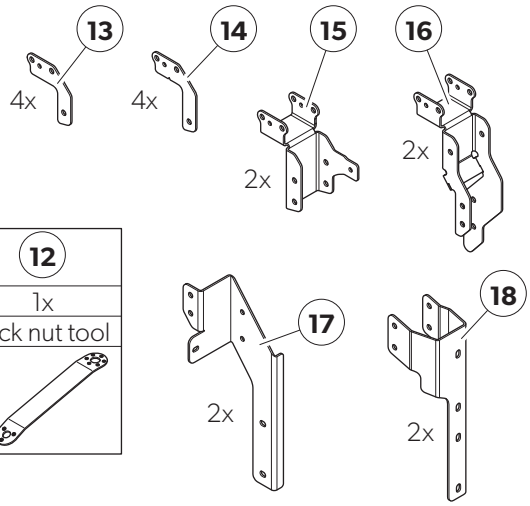

PBRA001

1	2	3	4	5	6	7	8	9	10	11
12x	22x	22x	16x	16x	16x	16x	6x	4x	8x	24x
M6 x 16	M6	M6	M8 x 20	M8 x 19 x 2	M8	M8	M6 x 12	M6 x 20	M6 x 12 x 1	M6 x 25

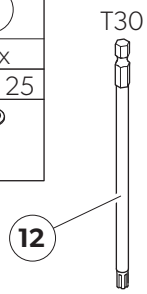

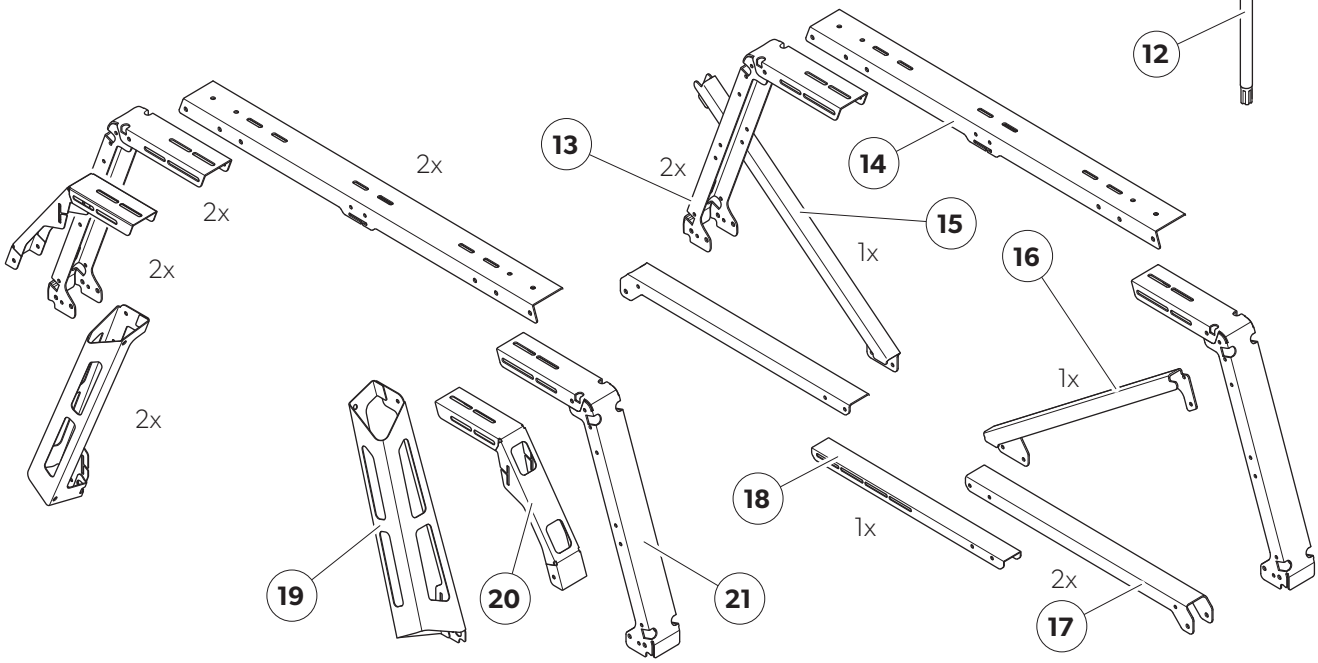

PBAL1250

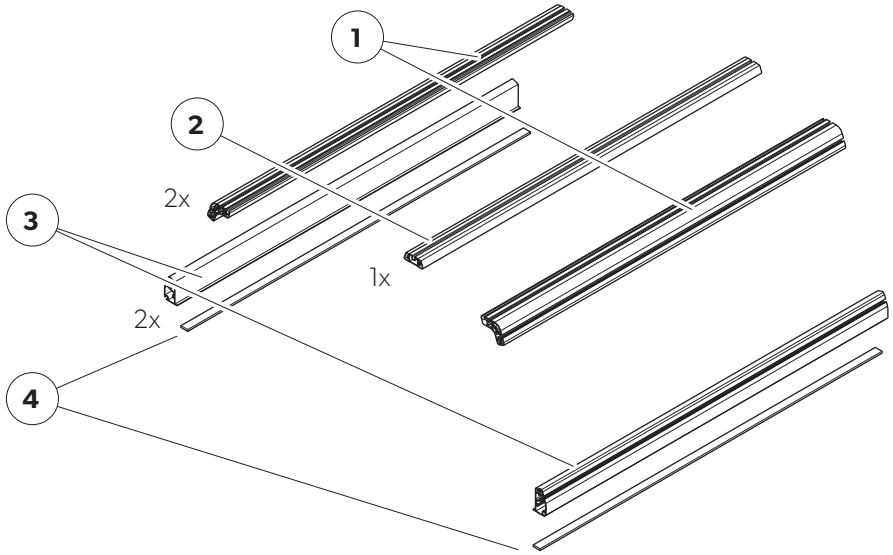

1

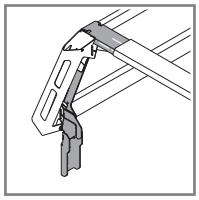

PBFR003

8x (1)
8x (2)
8x (10)
2x (13)
1x (16)
1x (17)

PBRA001

1x (21)

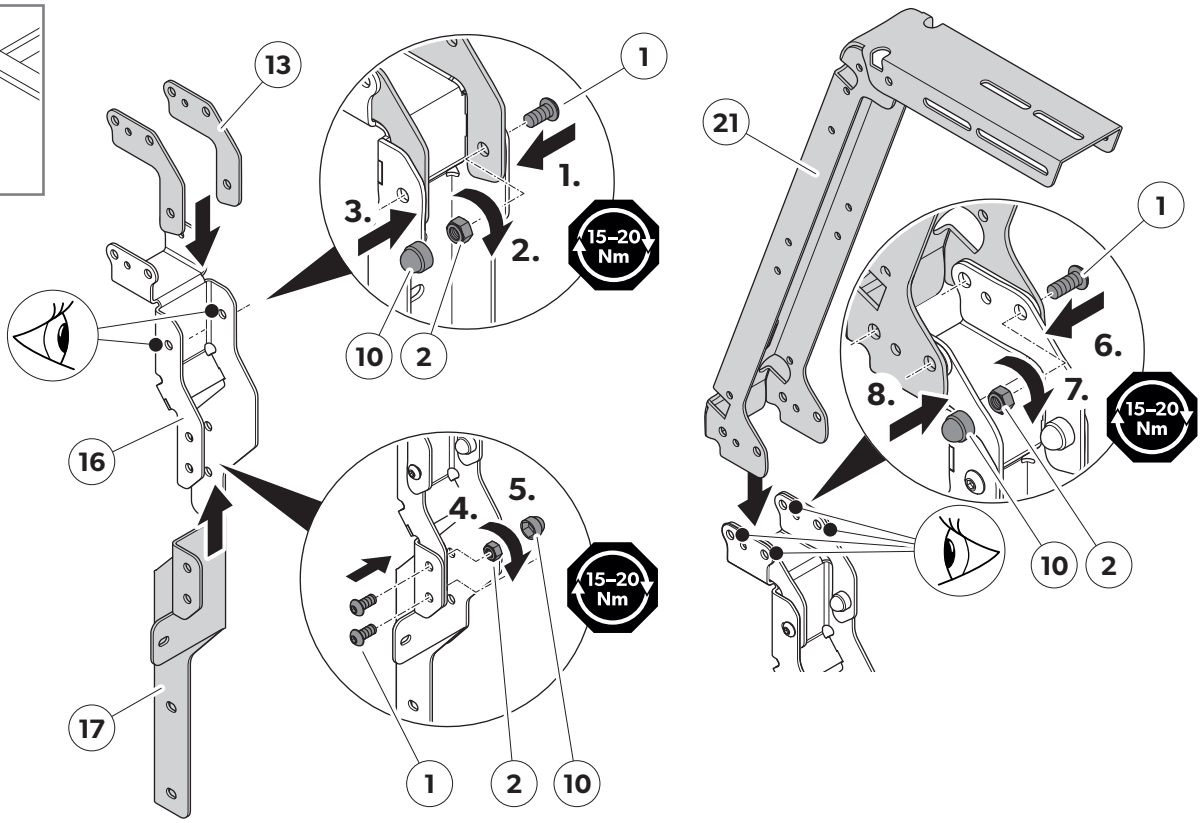

2

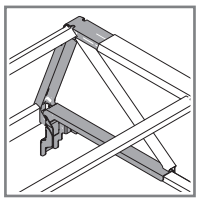

PBFR003

6x (1)
6x (2)
6x (10)
2x (14)
1x (15)
1x (18)

PBRA001

1x (13)

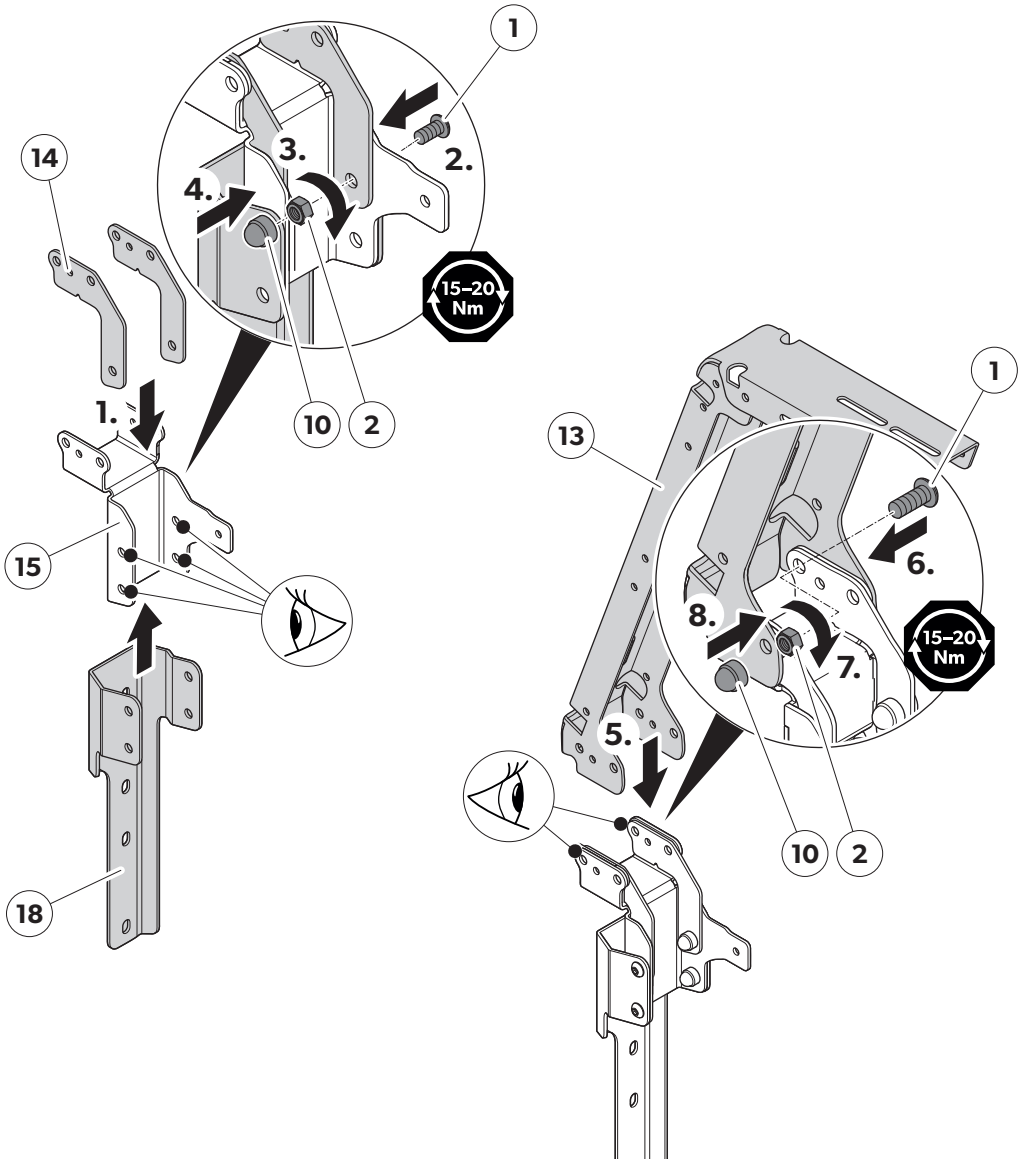

3 PBFR003

2x (2)

2x (10)

2x (11)

PBRA001

1x (17)

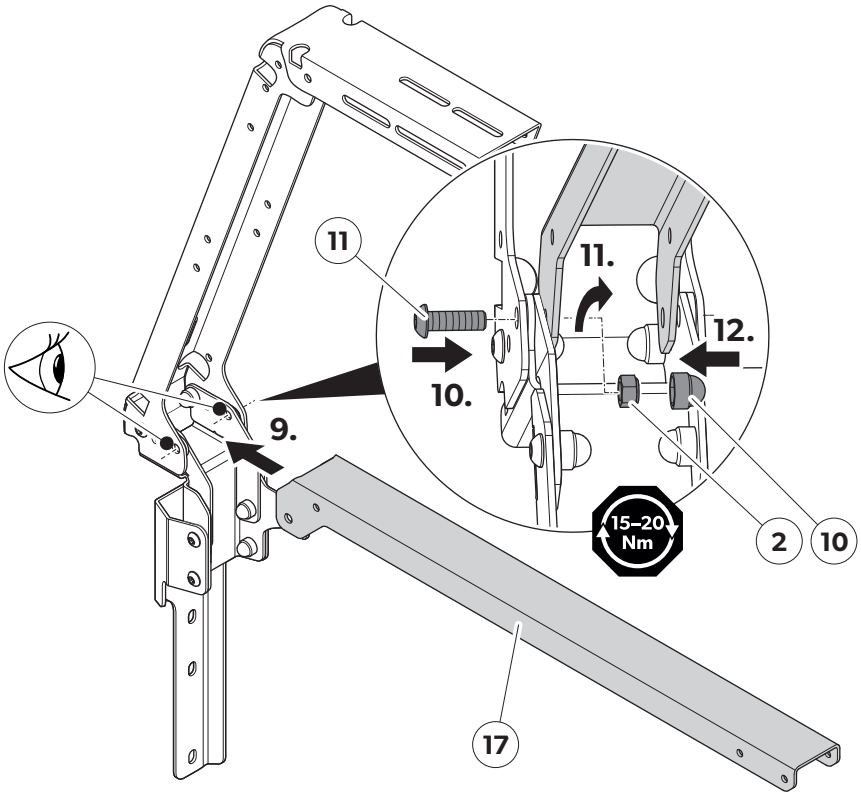

4

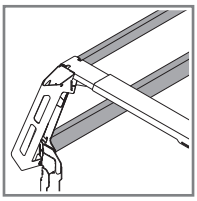

PBRA001

5x (11)

1x (12)

PBAL1250

1x (1)

1x (3)

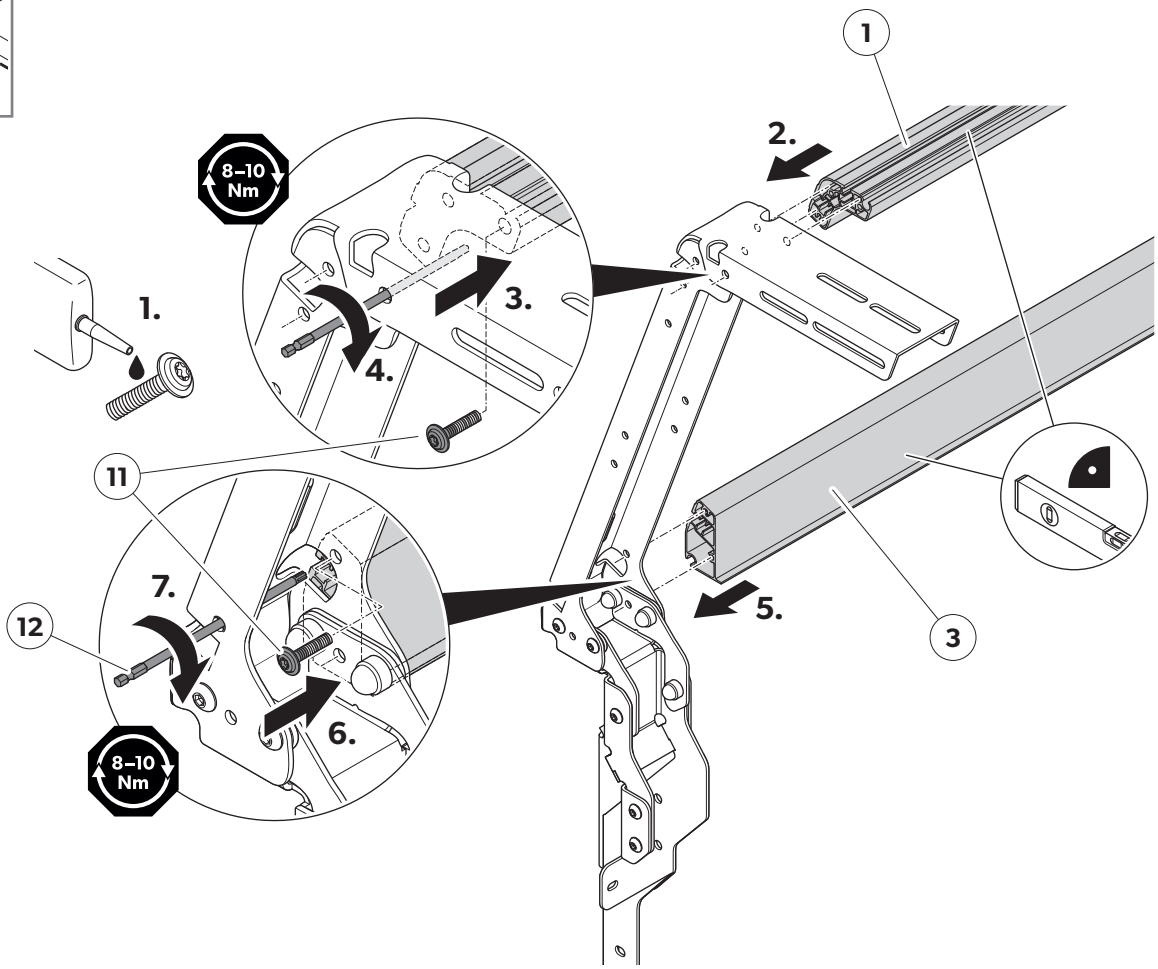

5

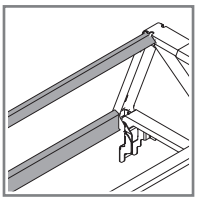

PBRA001

5x (11)

1x (12)

PBAL1250

1x (1)

1x (3)

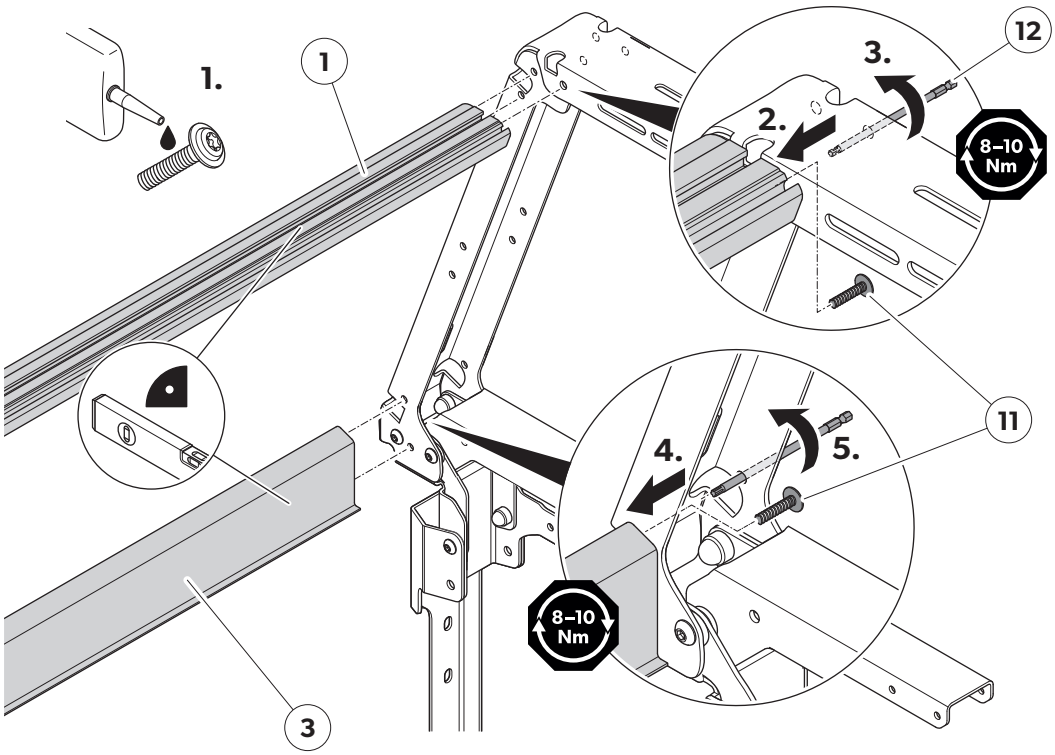

6

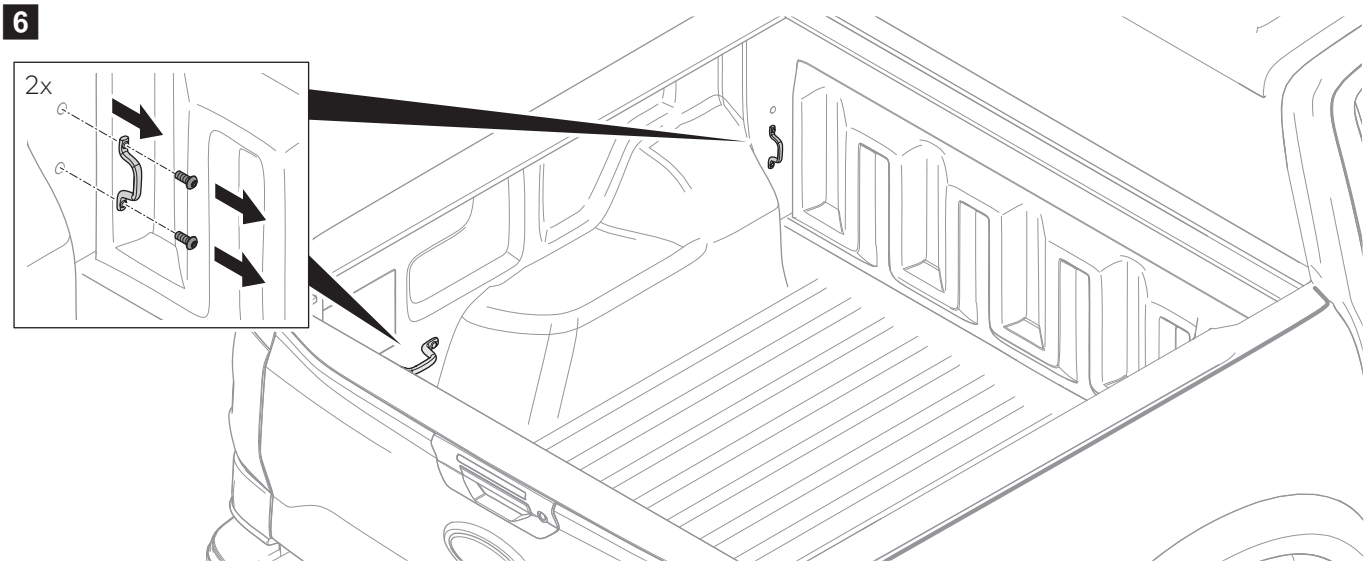

7 PBAL1250

1x (4)

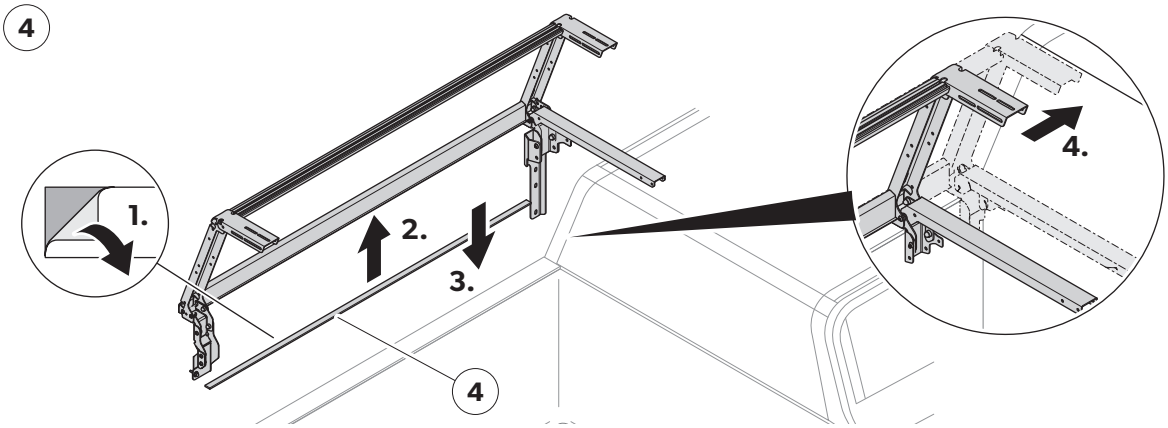

8

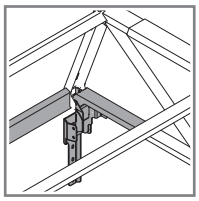

PBFR003

2x (6)

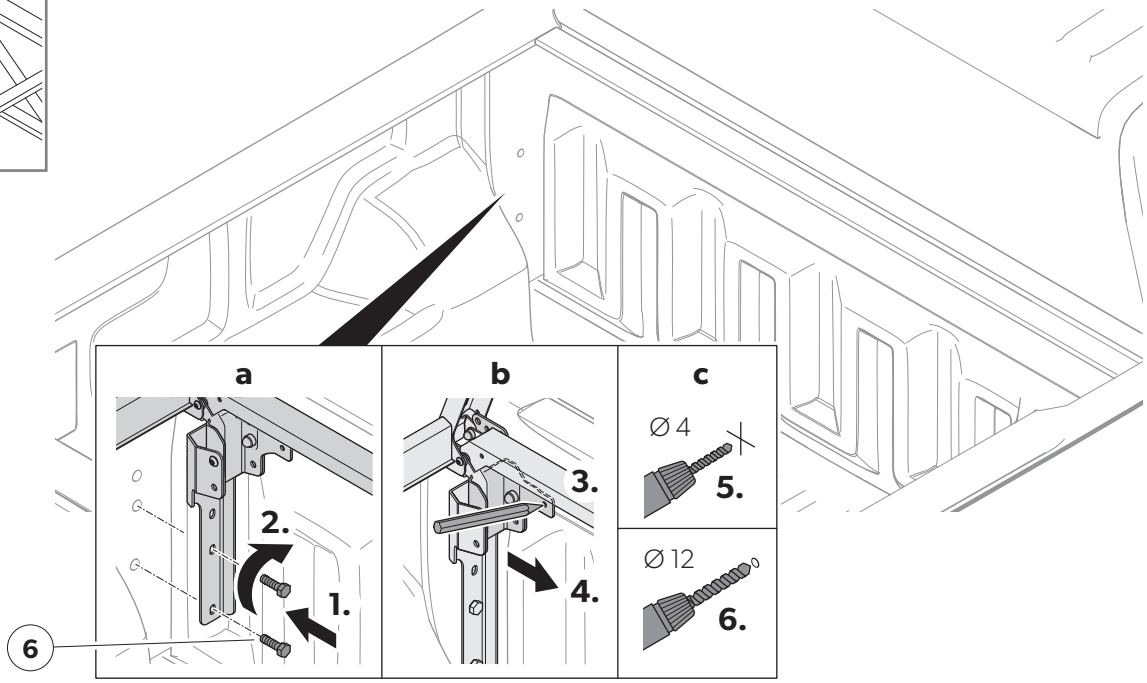

9 PBFR003

1x (5)

1x (8)

1x (12)

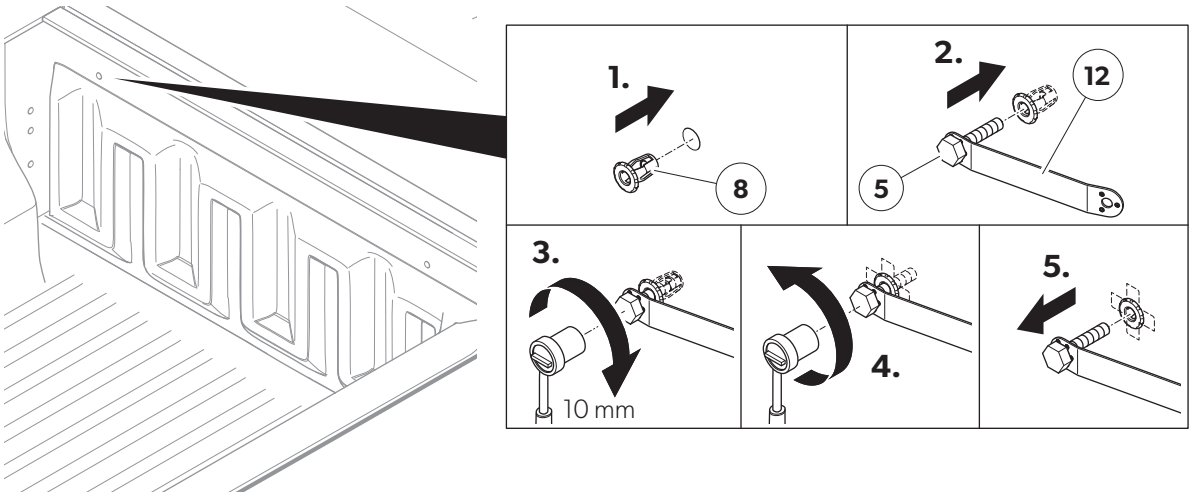

10

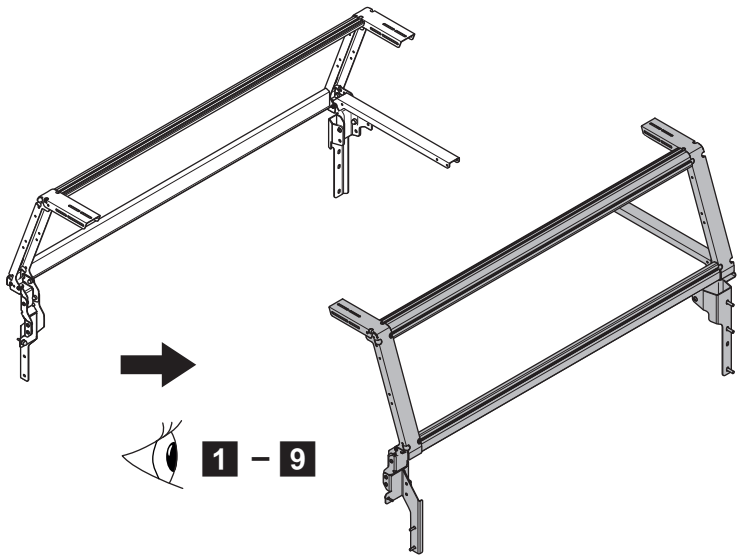

11 PBFR003

4x	2	10x	6
14x	3	2x	7
2x	4	4x	9
2x	5	14x	10

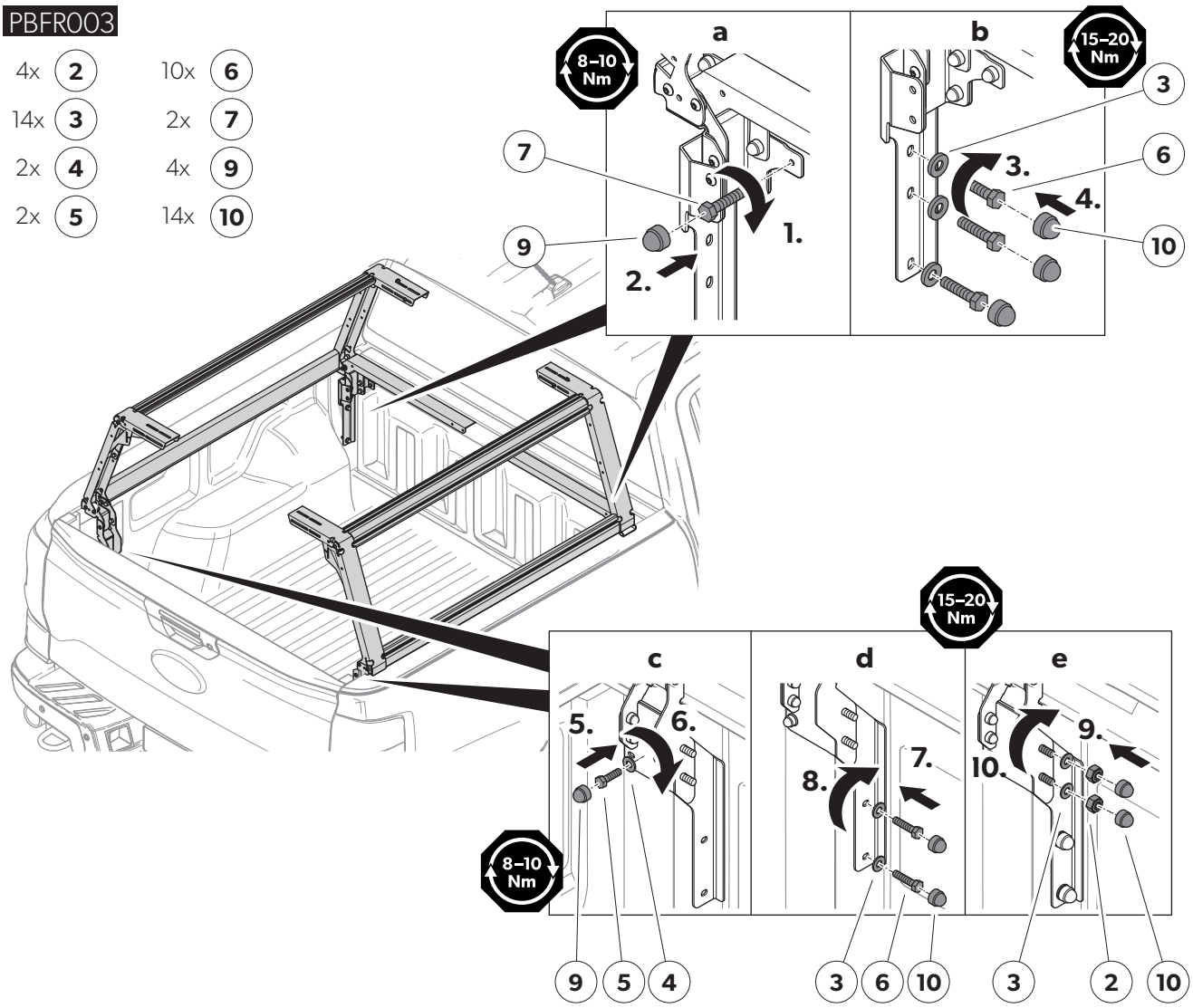

12

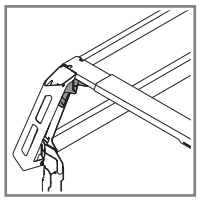

PBRA001

2x	1
2x	2
2x	3
2x	20

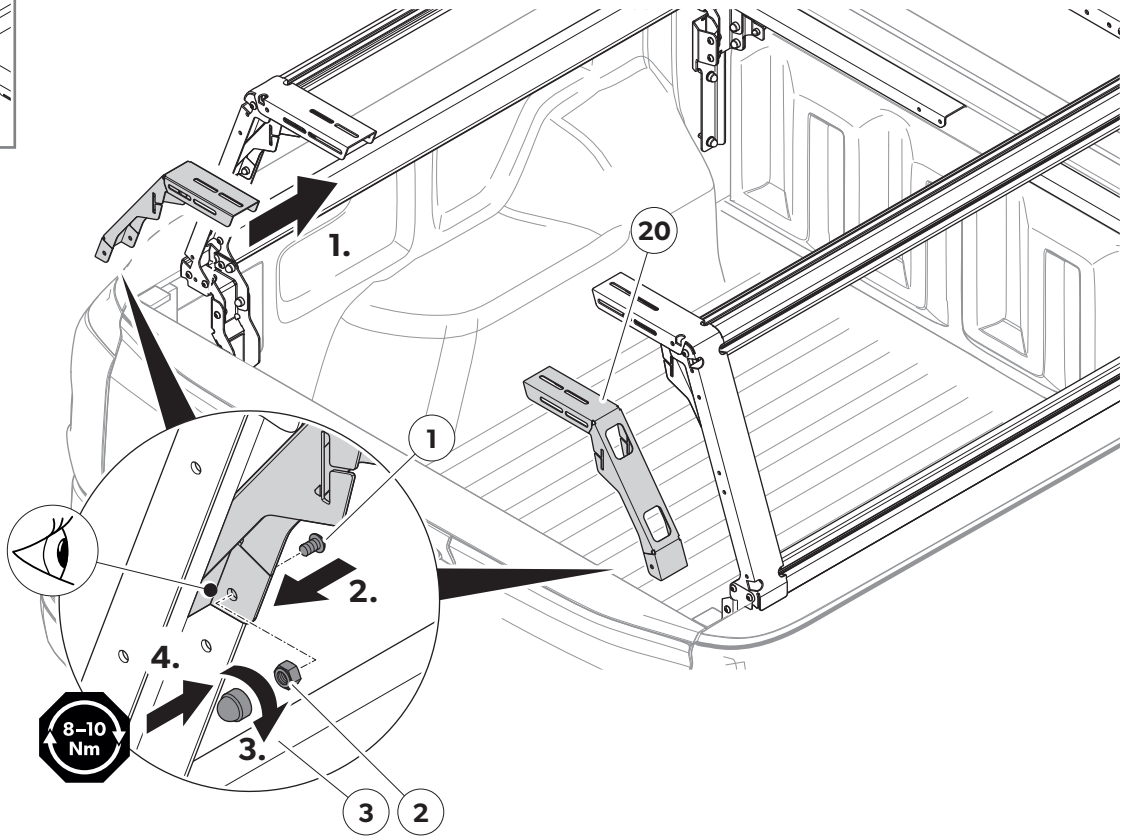

13

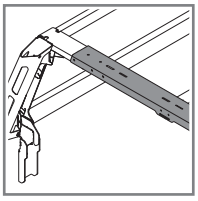

PBRA001

16x (4)

16x (5)

16x (6)

2x (14)

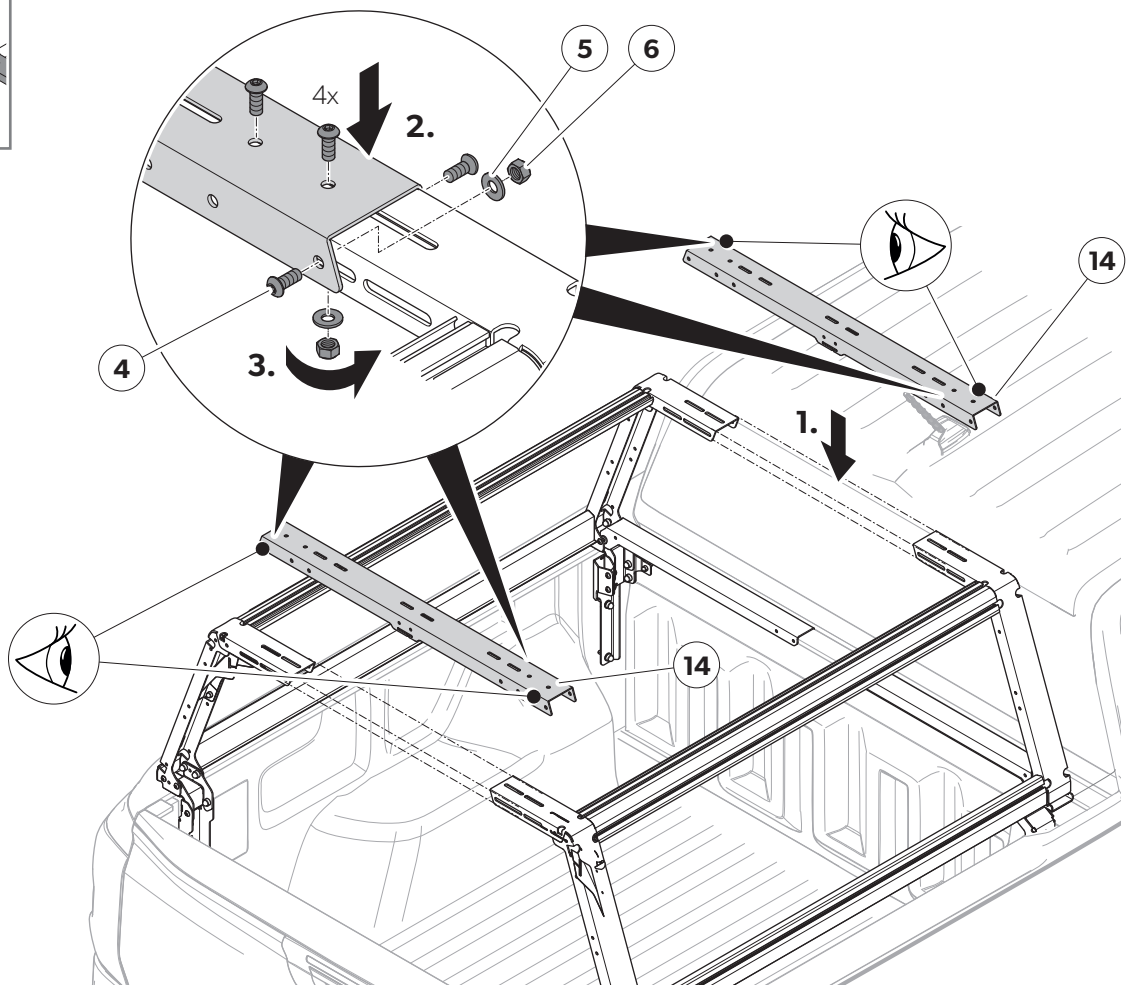

14

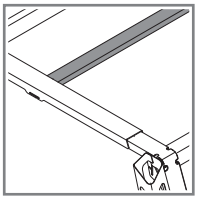

PBRA001

4x (11)

1x (12)

PBAL1250

1x (2)

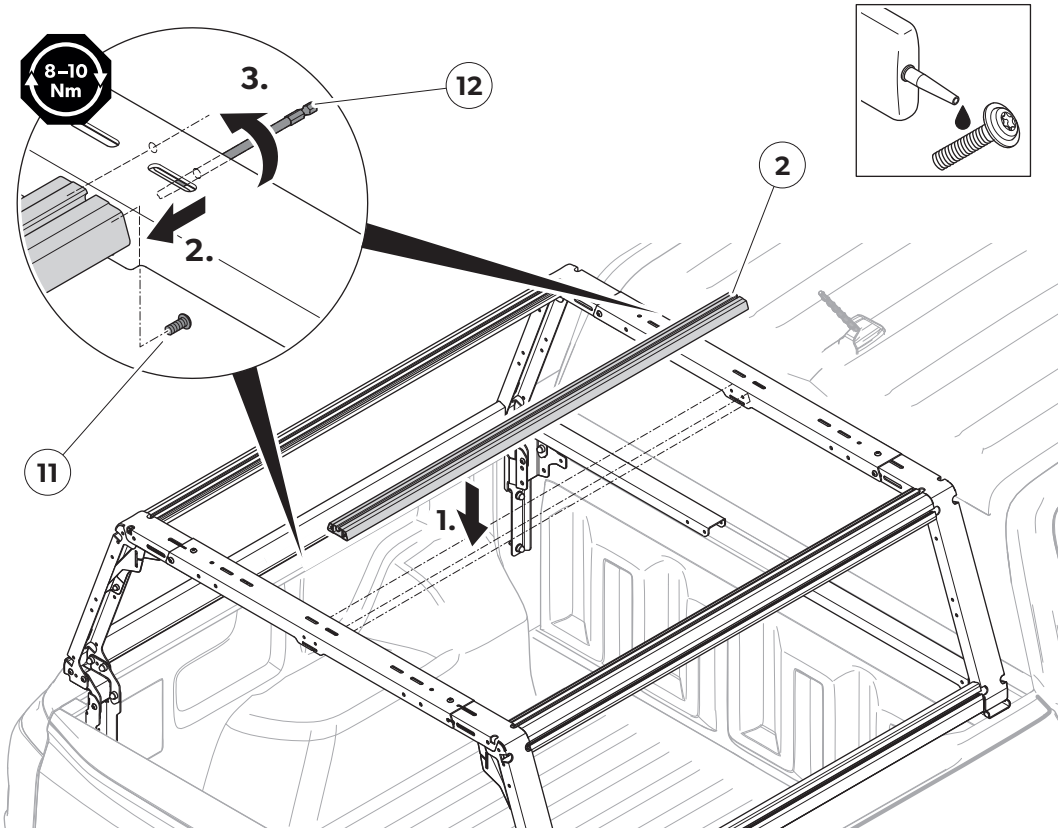

15

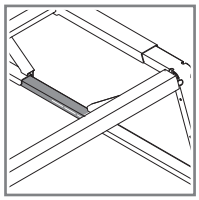

PBRA001

4x (1)

4x (2)

4x (10)

PBAL1250

1x (18)

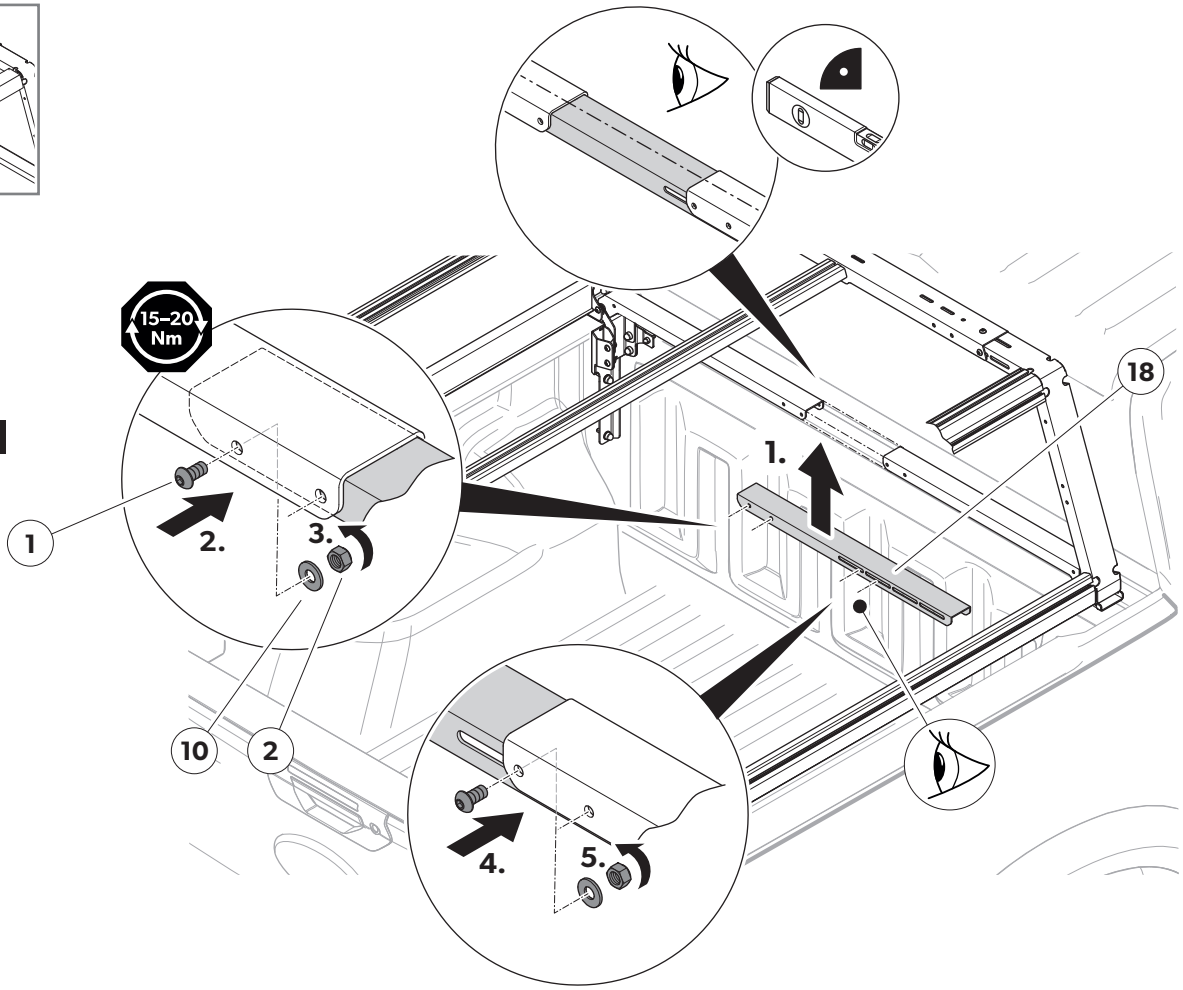

16

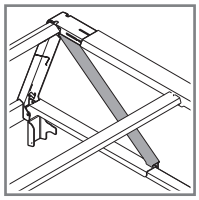

PBRA001

4x (1)

8x (2)

4x (3)

4x (9)

4x (10)

1x (15)

1x (16)

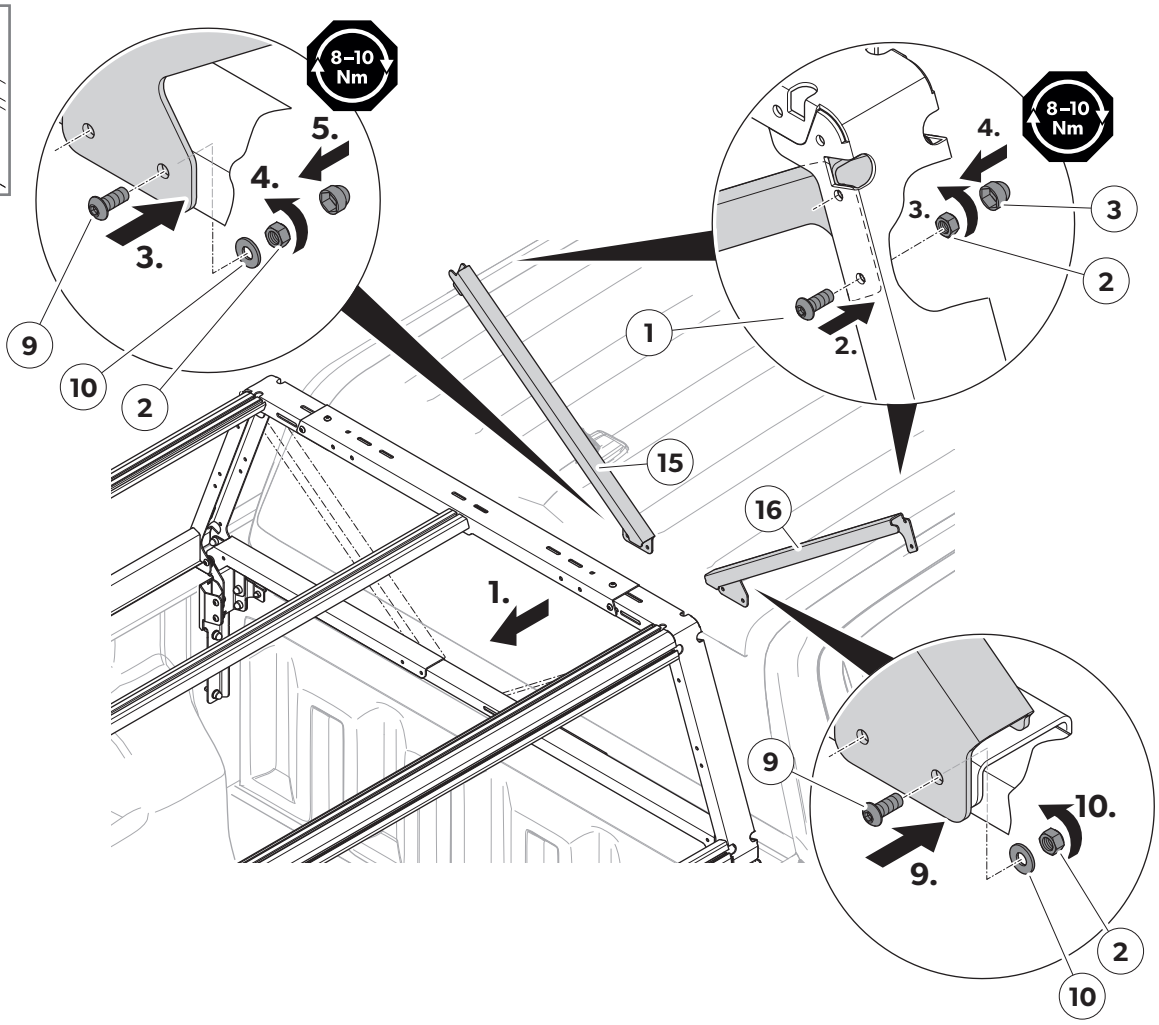

17

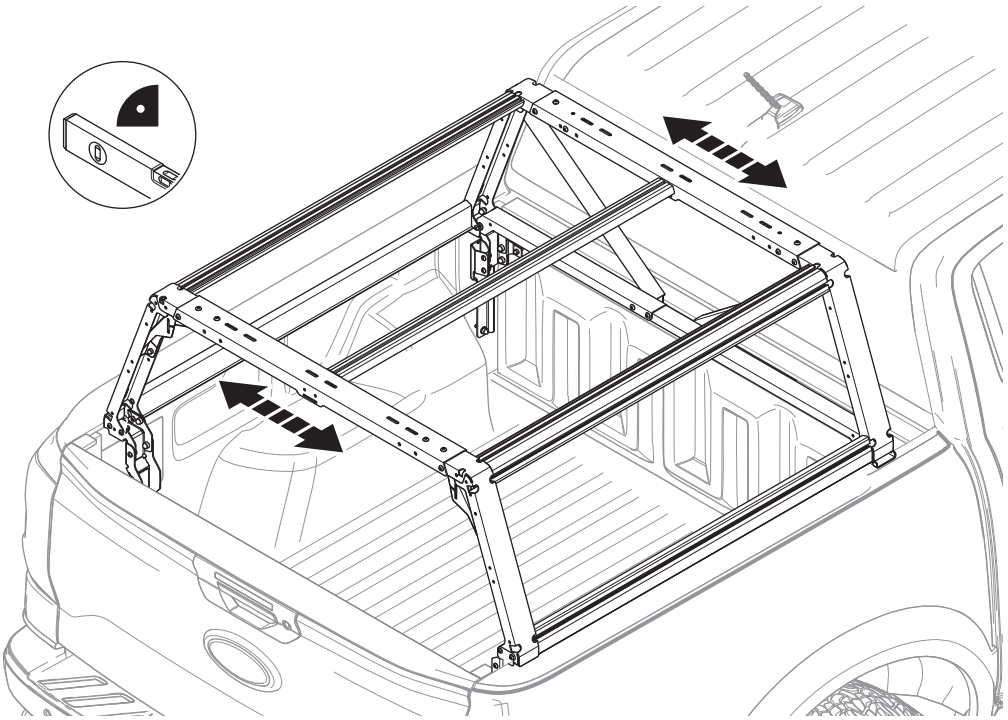

18 PBRA001

8x (3)

16x (7)

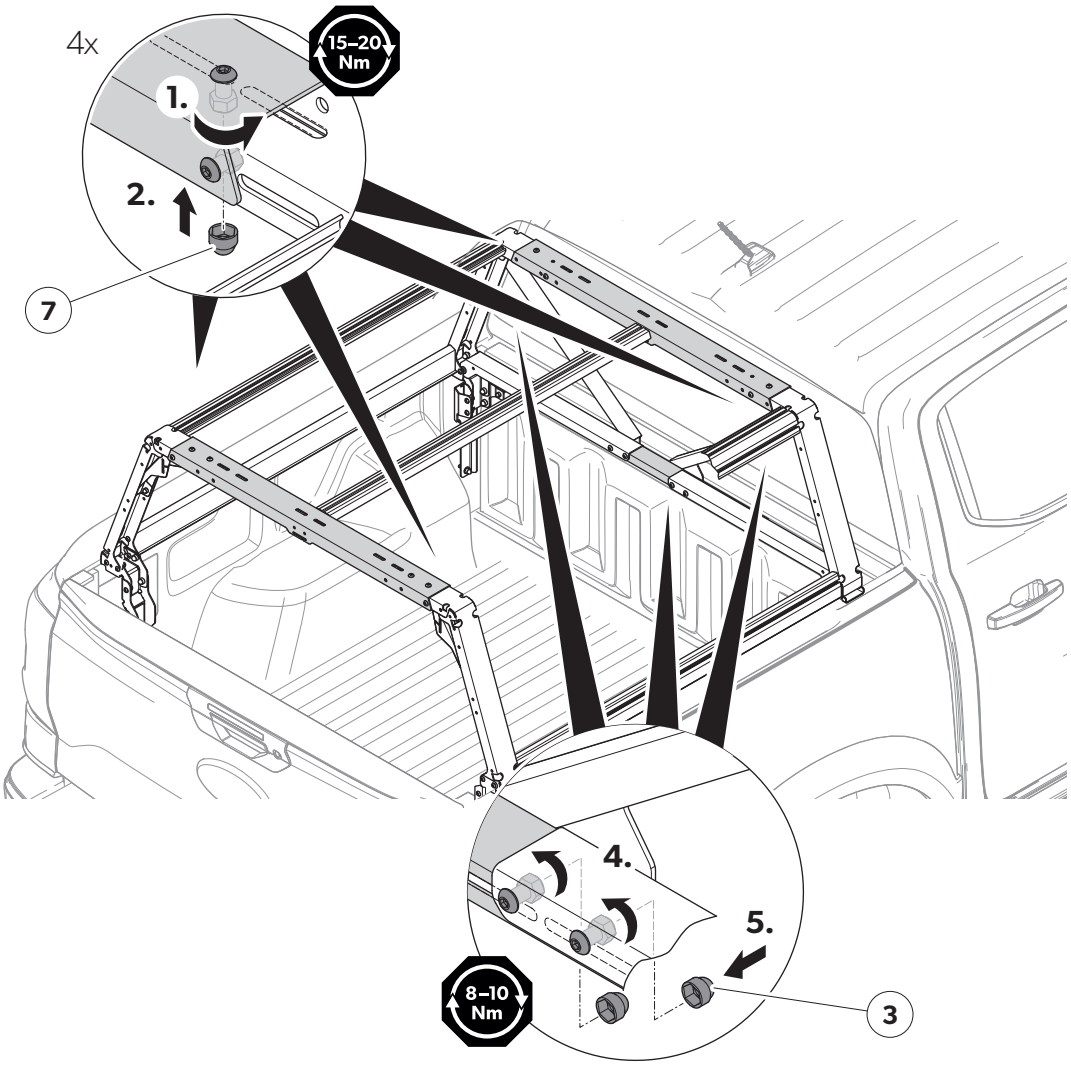

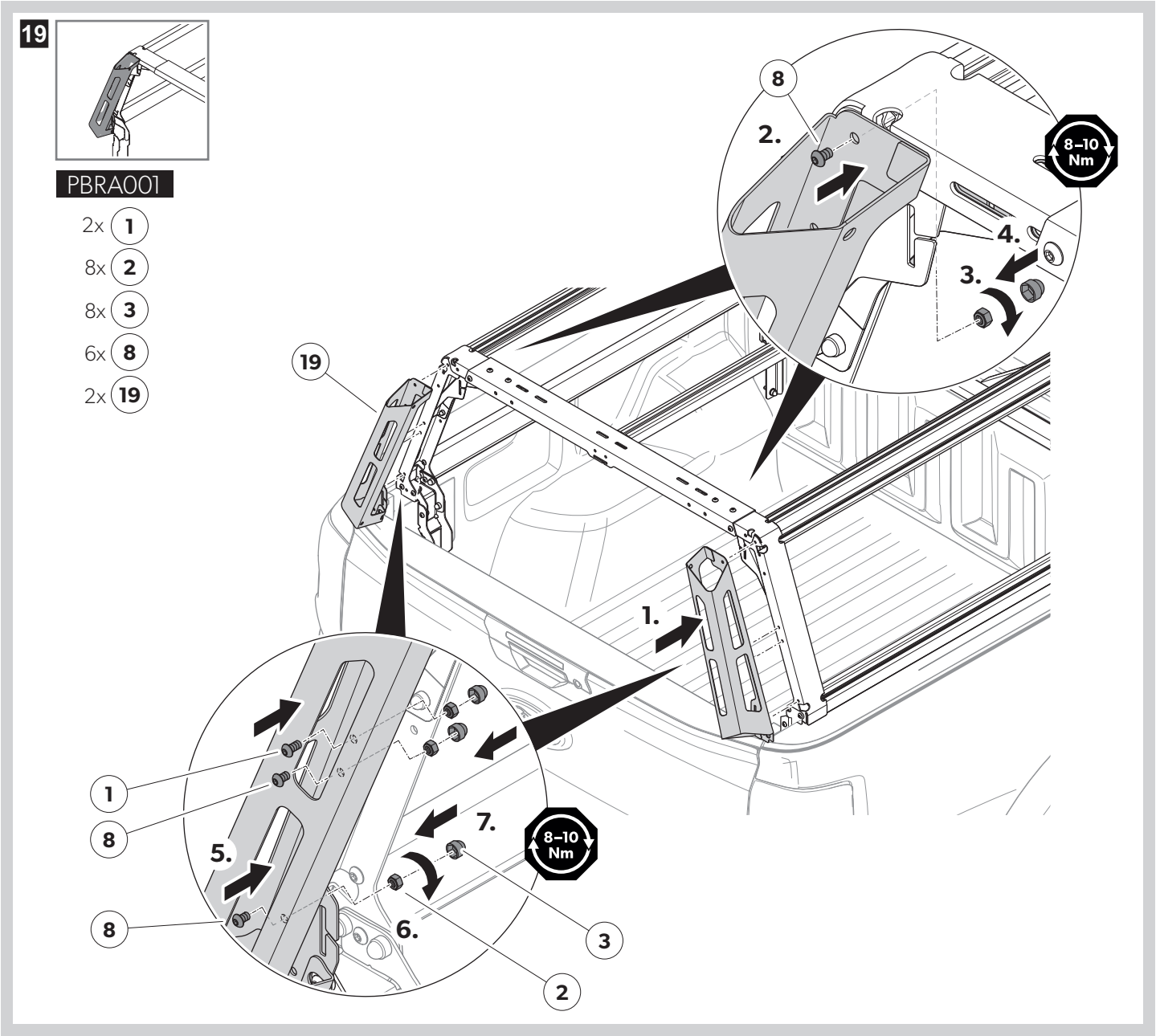

dometic.com

YOUR LOCAL DEALER	YOUR LOCAL SUPPORT	YOUR LOCAL SALES OFFICE
dometic.com/dealer	**dometic.com/contact**	**dometic.com/sales-offices**

A complete list of Dometic companies, which comprise the Dometic Group, can be found in the public filings of:
DOMETIC GROUP AB • Hemvärnsgatan 15 • SE-17154 Solna • Sweden

4445105041 2026-02-03