ADVENTURE FURTHER®

KC FLEX™ ERA FACEPLATE|BEZEL|LENS|O-RING

INSTALLATION INSTRUCTIONS

IMPORTANT:

Please read all instructions before beginning installation. These guidelines are provided in good faith to help prevent any issues arising from errors during installation. The manufacturer of this product shall not be held responsible for any user actions taken or not taken during installation. There are many details of the installation that are assumed to be general mechanical knowledge to experienced installers; which are not detailed in these instructions. These installation guidelines are intended to serve as professional recommendations and are not as a step-by-step, fail-safe installation checklist. Selection of an experienced installer is the sole responsibility of the project owner.

STEPBYSTEPINSTALLATIONINSTRUCTIONS

IT IS HIGHLY RECOMMENDED THAT ALL SERVICING OF LED MODULES OCCUR OFF THE VEHICLE AND ON A CLEAN, FLAT SURFACE.

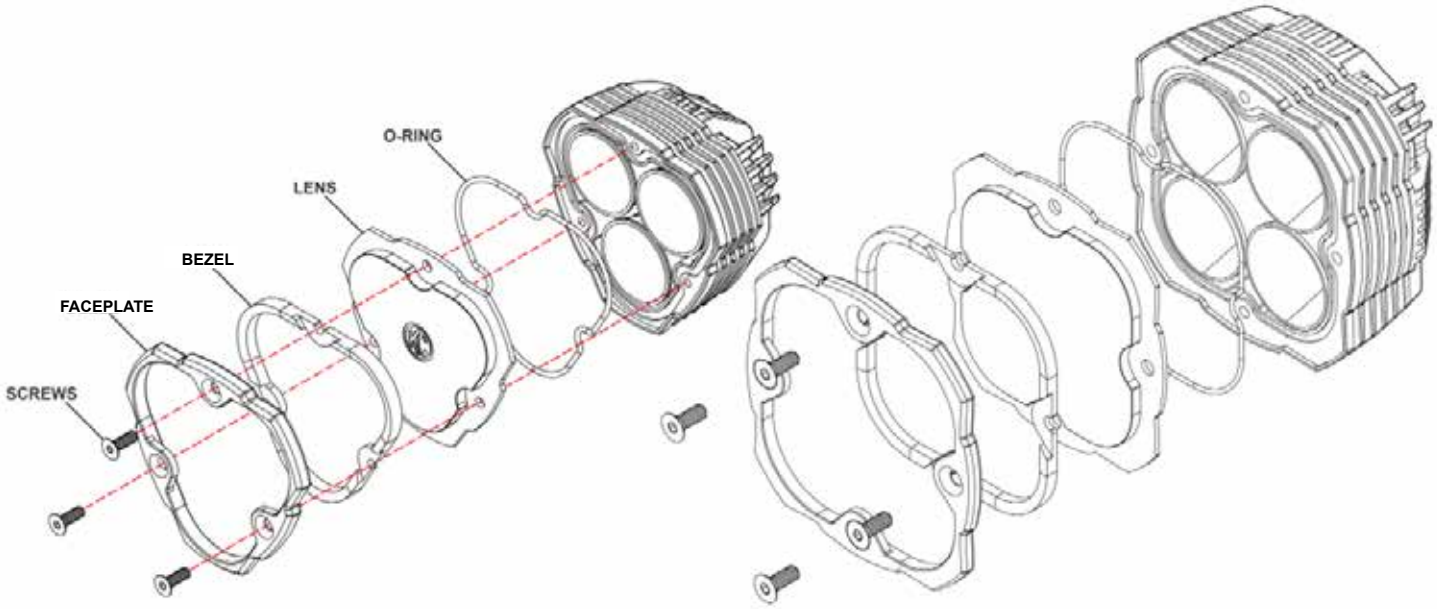

BEZEL INSTALLATION:

1. Begin by using a 2.5 Hex/Allen Key to remove the M4 Flat Socket Screws.
2. Remove FACEPLATE & BEZEL from the assembly ONLY, leaving the LENS & O-RING in place.
3. Re-place the BEZEL by seating it atop of the LENS.
4. Re-place the FACEPLATE over the BEZEL.
5. Remove and Re-apply (Blue) Lock-Tite onto the screws.
6. Hand-tighten the M4 Flat Socket Screws, evenly distributing the pressure.
   Torque the Screws to 6.5lbf.in (7.5kgf.cm)

LENS + O-RING INSTALLATION:

1. Begin by using a 4 Hex/Allen Key to remove the M6 Flat Socket Screws.
2. Remove FACEPLATE, BEZEL, LENS + O-RING from the assembly.
3. Place 'new' O-RING inside the O-Ring Groove in Housing.
4. Place LENS atop the O-RING with the correct logo positioning.
5. Re-place the BEZEL over the LENS.
6. Re-place the FACEPLATE over the BEZEL.
7. Remove and Re-apply (Blue) Lock-Tite onto the screws.
8. Hand-tighten the M6 Flat Socket Screws, evenly distributing the pressure.
   Torque the Screws to 6.5lbf.in (7.5kgf.cm)

Copyright 2023 KC HiLiTES, Inc. Rev:09212023 - KC3265COA REV 3

ADVENTURE FURTHER®

KC FLEX™ ERA
FACEPLATE|BEZEL|LENS|O-RING

INSTALLATION INSTRUCTIONS

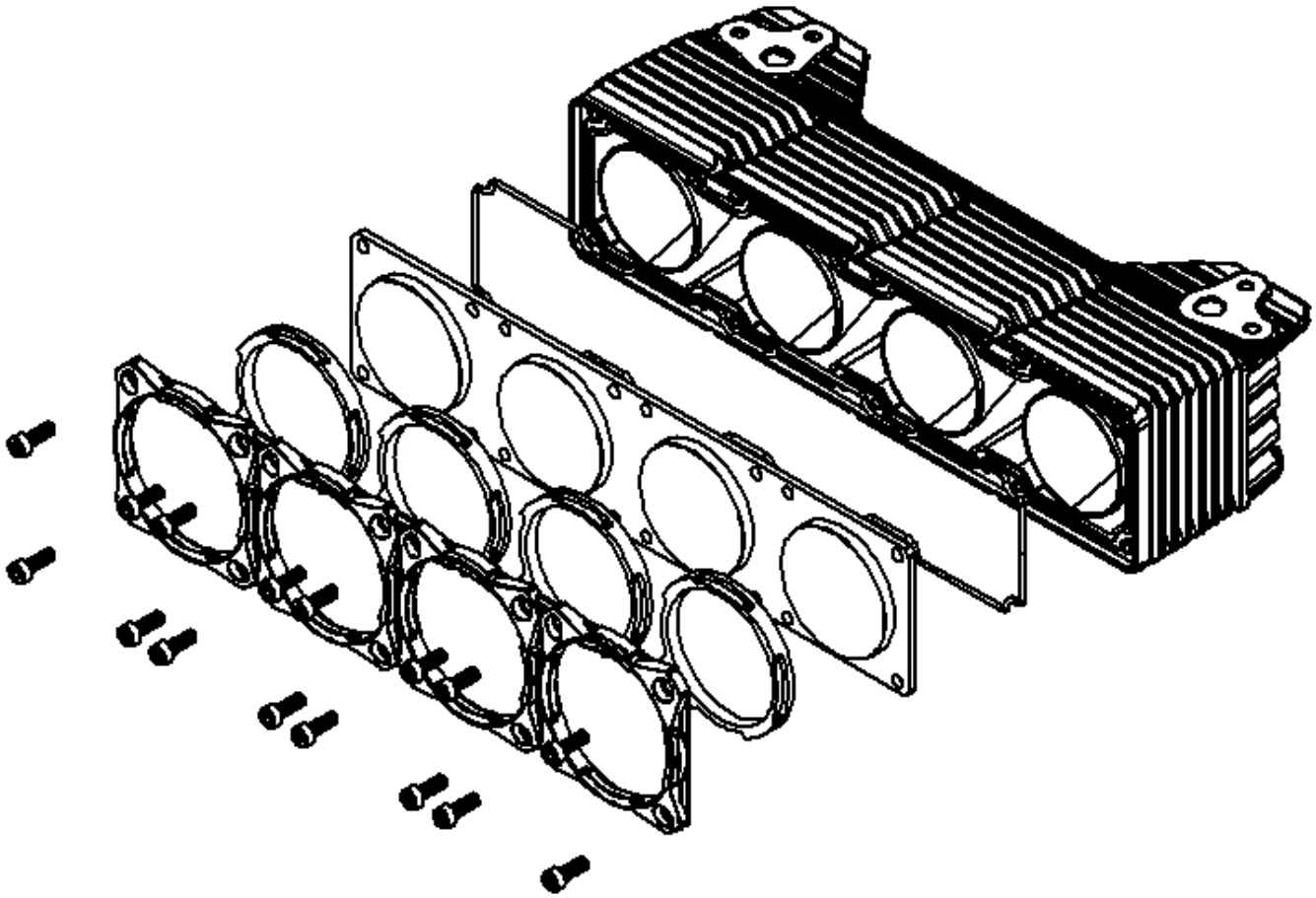

LENS + BEZEL INSTALLATION:

1. Begin by using a 3 Hex/Allen Key to remove the M4 Socket Head Screws.
2. Remove FACEPLATE, BEZELS, LENS + O-RING from the assembly.
3. Place 'new' O-RING inside the O-Ring Groove in Housing.
4. Place LENS atop the O-RING with the correct logo positioning.
5. Re-place the BEZELS over the LENS.
6. Re-place the FACEPLATE over the BEZELS.
7. Remove and Re-apply (Blue) Lock-Tite onto the screws.
8. Hand-tighten the M4 Socket Head Screws, evenly distributing the pressure.
   Torque the Screws to 6.5lbf.in (7.5kgf.cm)

Copyright 2023 KC HiLiTES, Inc. Rev:09212023 - KC3265COA REV 3