ADVENTURE FURTHER®

FLEX ERA 1

LIGHT ORIENTATION | TRIM | LENS | O-RING | CLOCKING
INSTALLATION GUIDE

INSTALLATION GUIDE

IMPORTANT: Please read all instructions before beginning installation. These guidelines are provided in good faith to help prevent any issues arising from errors during installation. The manufacturer of this product shall not be held responsible for any user actions taken or not taken during installation. There are many details of the installation that are assumed to be general mechanical knowledge to experienced installers; which are not detailed in these instructions. These installation guidelines are intended to serve as professional recommendations and are not as a step-by-step, fail-safe installation checklist. Selection of an experienced installer is the sole responsibility of the project owner.

TRIM | LENS | O-RING | LIGHT ORIENTATION

TOOLS NEEDED:
METRIC ALLEN KEY SET

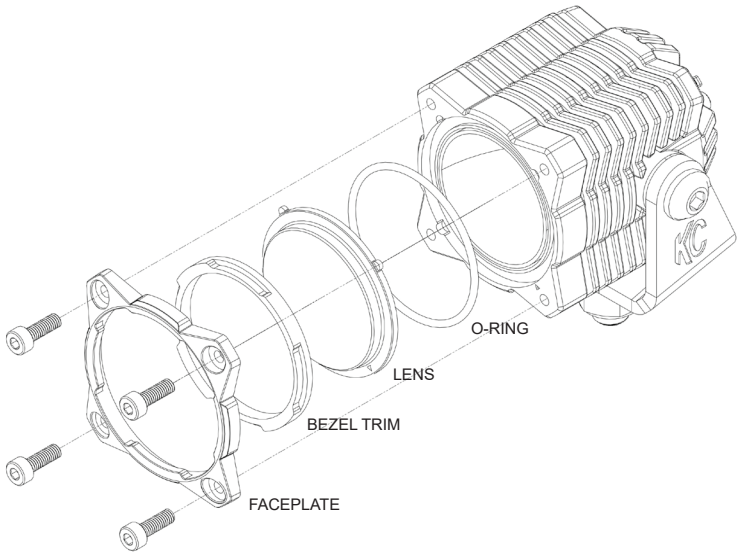

LIGHT ORIENTATION

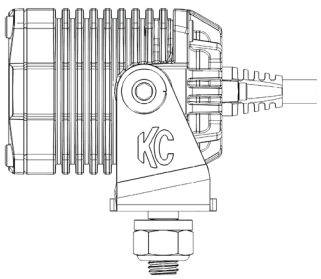

LEFT HAND BRACKET

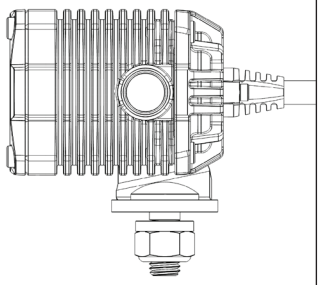

RIGHT HAND BRACKET

LENS CLOCKING FOR MOUNTING ORIENTATION

1

UPRIGHT ORIENTATION

2

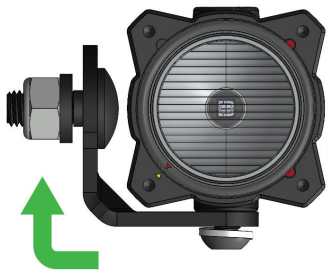

SIDE MOUNTED

3

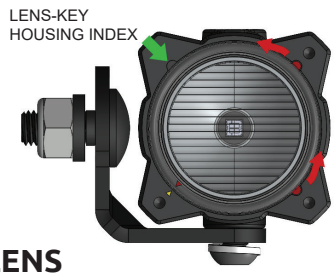

ROTATE LENS CCW 90°

4

CORRECTED LENS ORIENTATION

Copyright 2022 KC HiLiTES, Inc. Rev:11292022 - KC3265FQ REV1