FRONT RUNNER

TOYOTA LAND CRUISER 76 STATION WAGON LADDER

ENG

LATL003

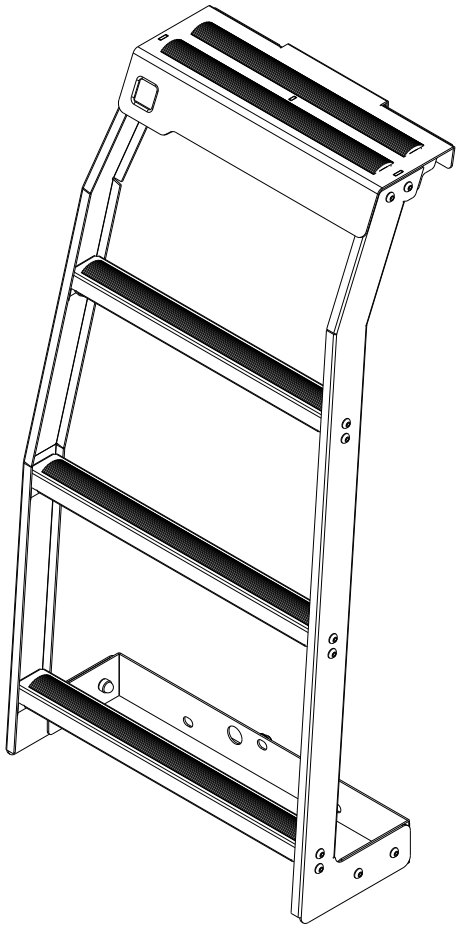

READ ME !

Thank you for purchasing Front Runner Toyota Land Cruiser 76 Station Wagon Ladder.

Before you start, take a moment to familiarize yourself with the Fitting Instructions and the components received.

Refer to Page 2 for a list of all the components, quantities and tools required.

IMPORTANT WARNING!

IT IS CRITICAL THAT ALL FRONT RUNNER PRODUCTS BE PROPERLY AND SECURELY ASSEMBLED AND ATTACHED TO YOUR VEHICLE. IMPROPER ATTACHMENT COULD RESULT IN AN AUTOMOBILE ACCIDENT, AND COULD CAUSE SERIOUS BODILY INJURY OR DEATH. YOU ARE RESPONSIBLE FOR ASSEMBLING AND SECURING ALL FRONT RUNNER PRODUCTS TO YOUR VEHICLE, CHECKING THE ATTACHMENTS PRIOR TO USE, AND PERIODICALLY INSPECTING THE PRODUCTS FOR ADJUSTMENT, WEAR AND DAMAGE. THEREFORE, YOU MUST READ AND UNDERSTAND ALL OF THE INSTRUCTIONS AND PRECAUTIONS SUPPLIED WITH YOUR FRONT RUNNER PRODUCT PRIOR TO INSTALLATION OR USE. IF YOU DO NOT UNDERSTAND ALL OF THE INSTRUCTIONS AND CAUTIONS, OR IF YOU HAVE NO MECHANICAL EXPERIENCE AND ARE NOT THOROUGHLY FAMILIAR WITH THE INSTALLATION PROCEDURES, YOU SHOULD HAVE THE PRODUCT INSTALLED BY A PROFESSIONAL INSTALLER OR OTHER QUALIFIED PERSONNEL.

NOTE: Front Runner will not be responsible for any damage caused by the failure to install the product according to these instructions.

Please call us if you have any questions about the installation of this product.

© 2020 FRONT RUNNER VEHICLE OUTFITTERS

1 GET ORGANIZED

IN THE BOX

1	1 X	RH Ladder Side
2	16 X	M6 x 12 Button Head Screws
3	2 X	Rubber Protective Strip - 400mm
4	3 X	M6 Large Flat Washer
5	20 X	M6 Flat Washer
6	20 X	M6 Nyloc Nut
7	20 X	M6 Nut Cap
8	1 X	Bottom Support
9	1 X	LH Ladder Side
10	2 X	Ladder Rung - TL31
11	1 X	Ladder Rung - TL32
12	1 X	Pinch Weld - 135mm
13	1 X	Ladder Top Step
14	1 X	Foam Rubber Strip - 90mm
15	4 X	M6 x 16 Button Head Screw

TOOLS NEEDED

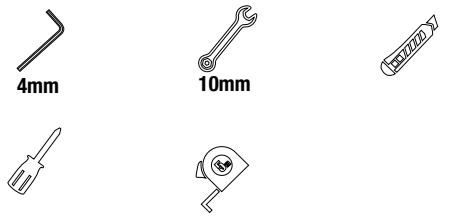

FIGURE 1.1

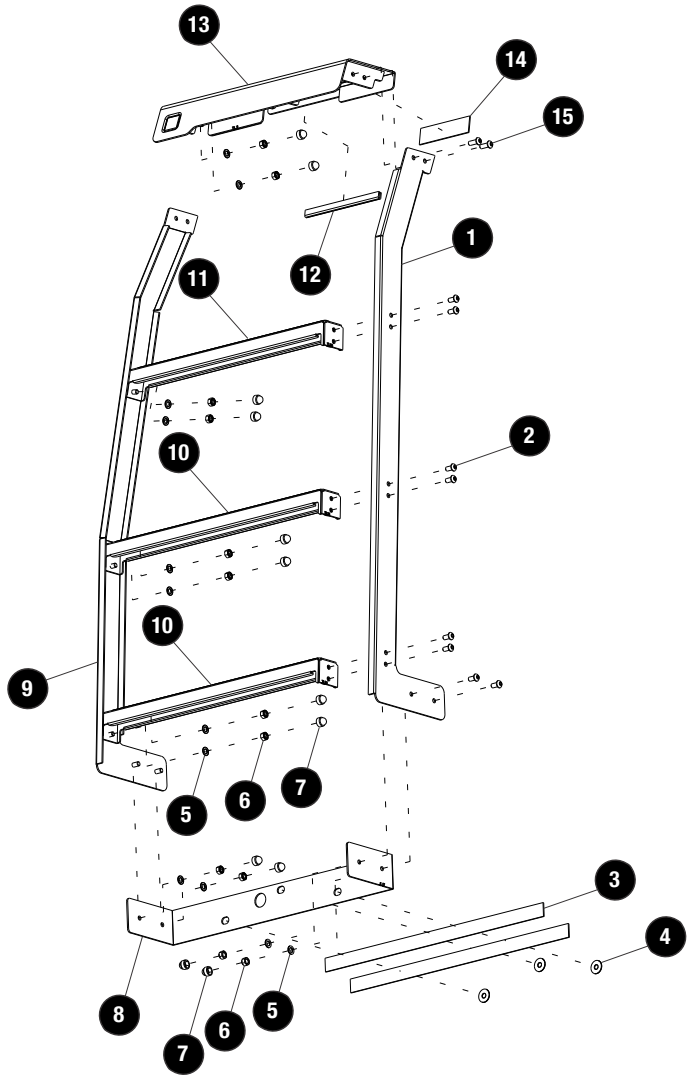

 © 2020 FRONT RUNNER VEHICLE OUTFITTERS

2 FIT AND SECURE

2.1

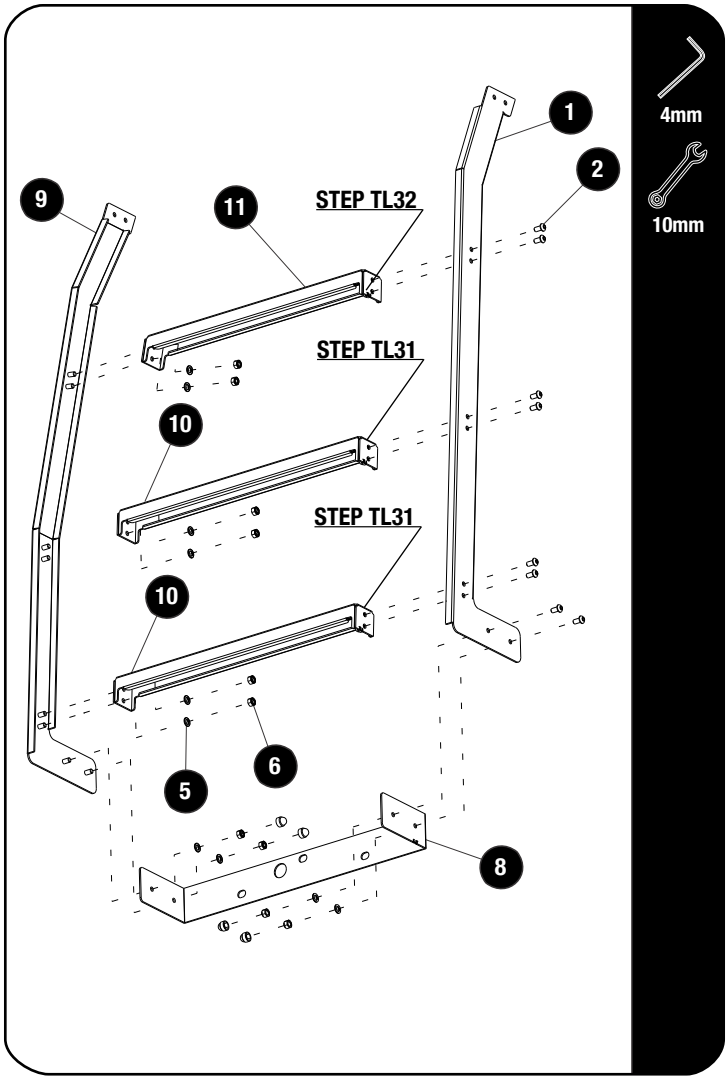

Loosely assemble the LH Ladder Side (Item 9) and the RH Ladder Side (Item 1) to Ladder Rung (Item 10), the Ladder Rung (Item 11) and the Bottom Support (Item 8) using sixteen M6x12 Button Head Screws, sixteen M6 Flat Washers and sixteen M6 Nyloc Nuts (Item 2, 5 & 6).

Check orientation of Ladder Steps before final assembly.

2.2

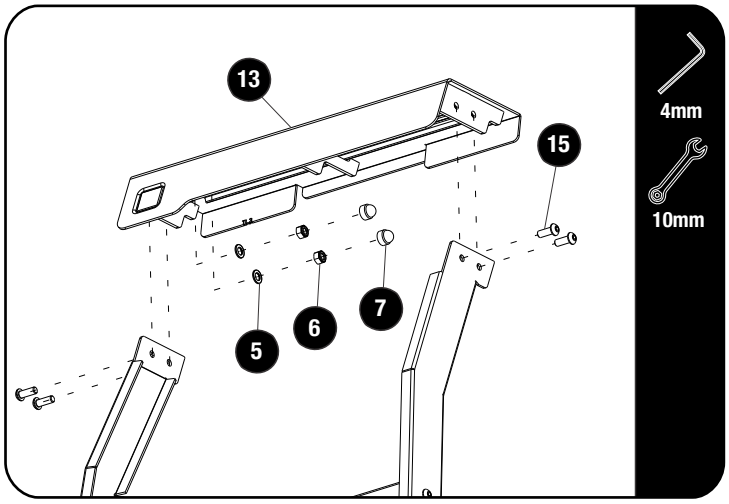

Fully assemble the Ladder Top Step (Item 13) to the assembly.

Fully tighten all the fasteners. Finish off by placing M6 Nut Caps (Item 7) over all exposed M6 Nyloc Nuts.

© 2020 FRONT RUNNER VEHICLE OUTFITTERS

2 FIT AND SECURE

2.3

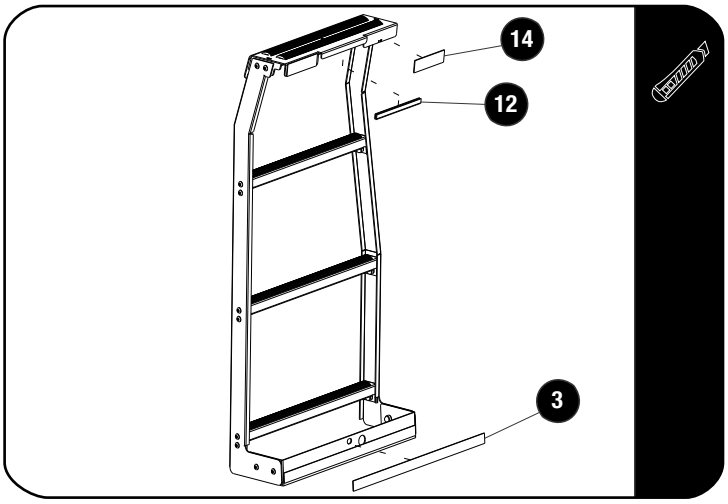

Remove the backing tape of the two Rubber Protective Strips (Item 3) and secure the strips to the Support Bracket as shown.

Use a Utility Knife and remove the rubber obscuring the holes on the Bottom Support.

Remove the backing tape of the two Foam Rubber Strips (Item 14) and secure the Strips to the Laddder Top Step (Item 13) as shown.

Place the Pinch Weld (Item 12) over the middle lip of the Ladder Mount as shown.

2.4

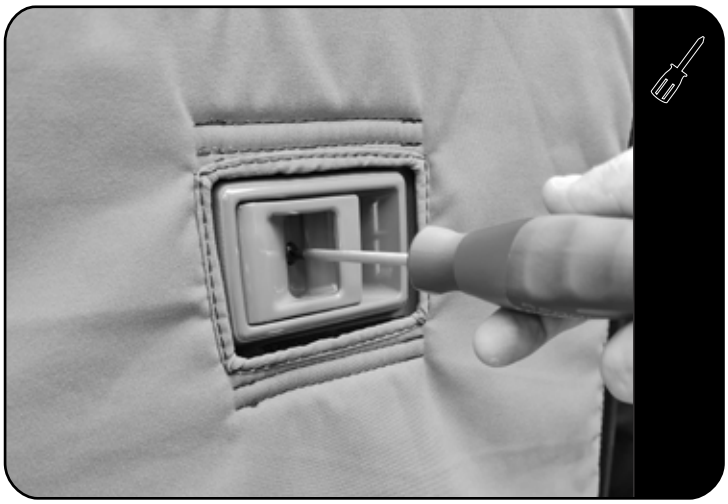

Open the vehicle left hand rear door. Loosen and remove the screw securing the latch to the inside of the rear door using a Phillips Screw Driver.

2.5

Push the latch forward to release and then to the right to unhook the latch from the door panel.

© 2020 FRONT RUNNER VEHICLE OUTFITTERS

2 FIT AND SECURE

2.6

With the latch free, carefully unclip the door panel and remove by feeding the latch back through the panel cut-out.

2.7

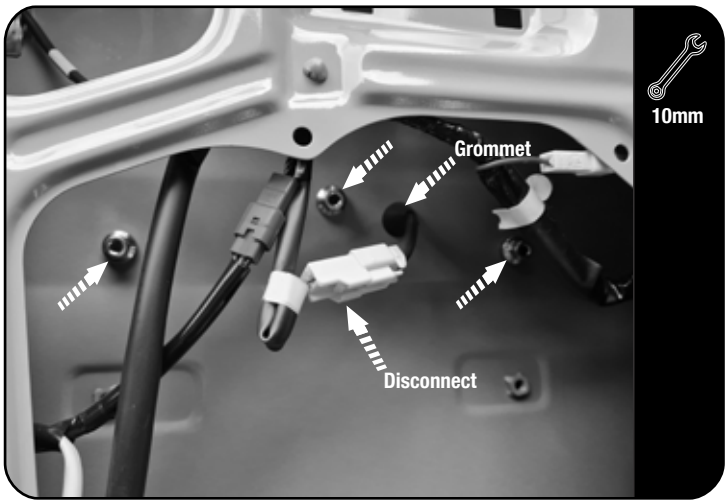

Peel back the plastic cover to expose the wiring and door fasteners.

Disconnect the electrical connector.

Loosen the three nuts and grommet, and remove the light unit from the vehicle.

2.8

Pull the rubber door seal at the top of the inside door away from the door. Hook the top of the ladder over the top of the door. The middle lip must go between the vehicle door and the rubber door seal and the two side tabs on the outside of the door as shown.

© 2020 FRONT RUNNER VEHICLE OUTFITTERS

2 FIT AND SECURE

2.9

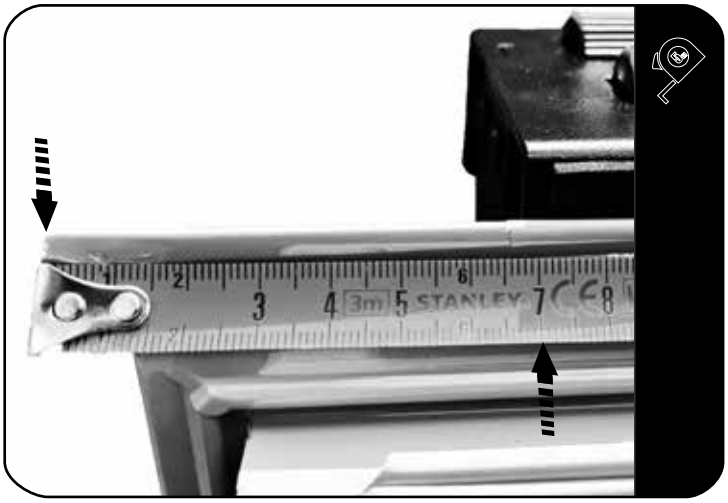

Position the Ladder 70mm from the top door edge as shown.

Refit the rubber door seal at the top of the inside door.

2.10

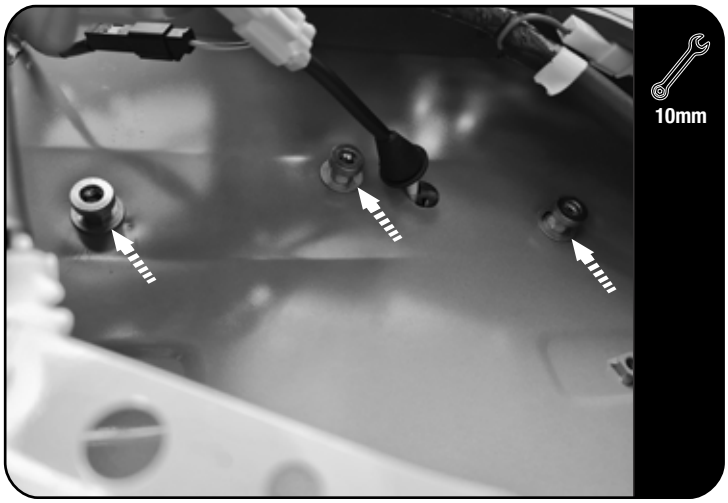

Line up the holes in the Bottom Support (Item 8) with the holes in the door. Refit the light unit pushing the threaded studs through the holes in the Support Bracket, through the door. Loosely secure the light unit using three M6 Large Flat Washers (Item 4) and the OEM nuts previously removed.

Make sure to refit the nuts back to front from the original fitment as shown.

Refit the grommet, making sure it seats properly.

Fully tighten the nuts.

Do not over tighten.

Reconnect the electrical fitting previously disconnected in 2.7.

Refit the plastic sheet, door panel and latch.

3 FINISH

Congratulations! You did it. Take a step back and admire your work!

4 INSTALL OTHER VEHICLE AND RACK ACCESSORIES

Now's the time to visit your favorite Front Runner Dealer in person or online.

Be sure to tag us. We love to see our gear in action! #FrontRunnerOutfitters #BornToRoam

Share your adventures on:

© 2020 FRONT RUNNER VEHICLE OUTFITTERS