FRONT RUNNER TOYOTA 4RUNNER (5TH GEN) LADDER

ENG

LATF001

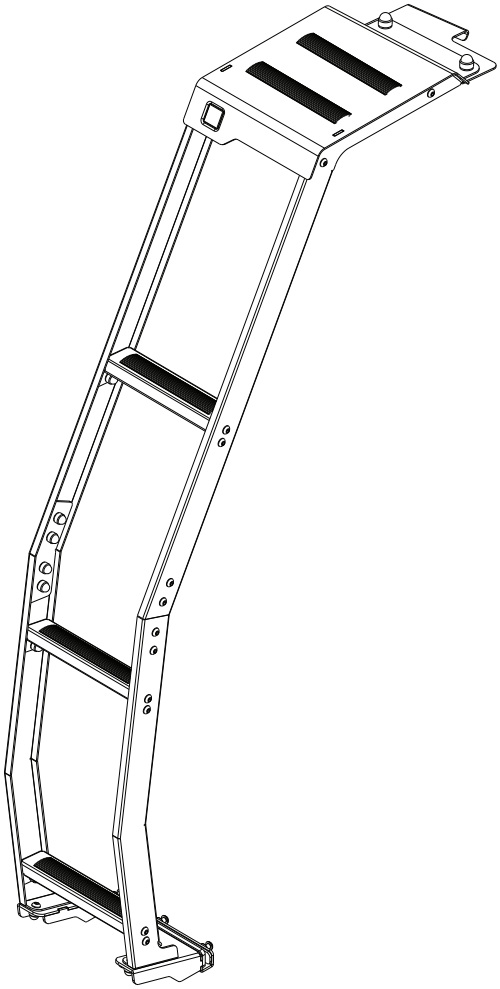

READ ME !

Thank you for purchasing Front Runner Toyota 4Runner (5th Gen) Ladder.

Before you start, take a moment to familiarize yourself with the Fitting Instructions and the components received.

Refer to Page 2 for a list of all the components, quantities and tools required.

IMPORTANT WARNING!

IT IS CRITICAL THAT ALL FRONT RUNNER PRODUCTS BE PROPERLY AND SECURELY ASSEMBLED AND ATTACHED TO YOUR VEHICLE. IMPROPER ATTACHMENT COULD RESULT IN AN AUTOMOBILE ACCIDENT, AND COULD CAUSE SERIOUS BODILY INJURY OR DEATH. YOU ARE RESPONSIBLE FOR ASSEMBLING AND SECURING ALL FRONT RUNNER PRODUCTS TO YOUR VEHICLE, CHECKING THE ATTACHMENTS PRIOR TO USE, AND PERIODICALLY INSPECTING THE PRODUCTS FOR ADJUSTMENT, WEAR AND DAMAGE. THEREFORE, YOU MUST READ AND UNDERSTAND ALL OF THE INSTRUCTIONS AND PRECAUTIONS SUPPLIED WITH YOUR FRONT RUNNER PRODUCT PRIOR TO INSTALLATION OR USE. IF YOU DO NOT UNDERSTAND ALL OF THE INSTRUCTIONS AND CAUTIONS, OR IF YOU HAVE NO MECHANICAL EXPERIENCE AND ARE NOT THOROUGHLY FAMILIAR WITH THE INSTALLATION PROCEDURES, YOU SHOULD HAVE THE PRODUCT INSTALLED BY A PROFESSIONAL INSTALLER OR OTHER QUALIFIED PERSONNEL.

NOTE: Front Runner will not be responsible for any damage caused by the failure to install the product according to these instructions.
Please call us if you have any questions about the installation of this product.

 © 2020 FRONT RUNNER VEHICLE OUTFITTERS

1 GET ORGANIZED

IN THE BOX

1	1 X	Top RH Ladder Side
2	20 X	M6x12 Button Head Screw
3	2 X	Bottom Ladder Side 1LH+1RH
4	1 X	Press Plate
5	11 X	M6x16 Button Head Screw
6	28 X	M6 Nut Cap
7	28 X	M6 Nyloc Nut
8	28 X	M6 Flat Washer
9	1 X	Bottom Bracket
10	1 X	Bottom Rung
11	1 X	Middle Rung
12	2 X	Joiner Plate
13	1 X	Upper Rung
14	1 X	Top LH Ladder Side

IN THE BOX

15	1 X	Ladder Top Step
16	2 X	M8 Flat Washer
17	2 X	M8 Nyloc Nut
18	2 X	M8 Nut Cap
19	1 X	Top Mounting Bracket

TOOLS NEEDED

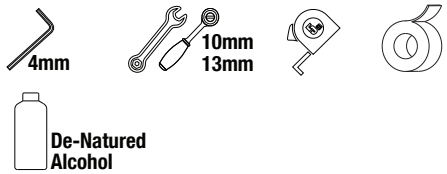

FIGURE 1.1

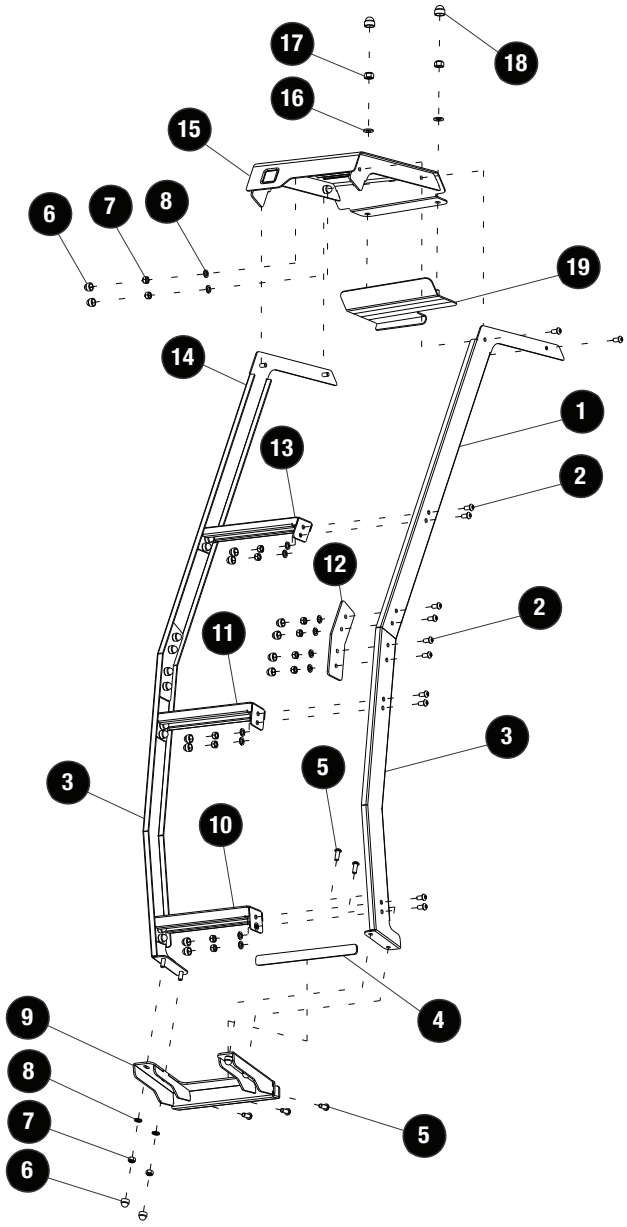

 © 2020 FRONT RUNNER VEHICLE OUTFITTERS

2 FIT AND SECURE

2.1

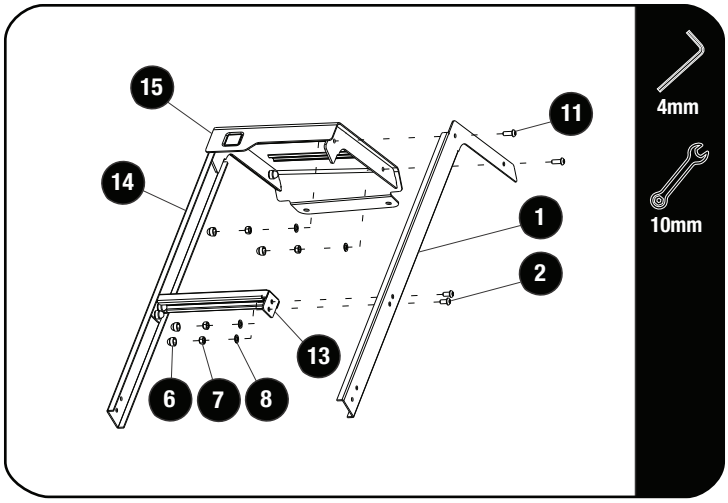

Assemble Top LH Ladder Side (Item 14), Ladder Top Step (Item 15), Upper Rung (Item 13) and the Top RH Ladder Side (Item 1), using four M6x12 Button Head Screws, four M6x16 Button Head Screws and eight M6 Nyloc Nuts (Item 2,11, 8 & 7). Finish off by placing eight M6 Nut Caps over the M6 Nyloc Nuts.

2.2

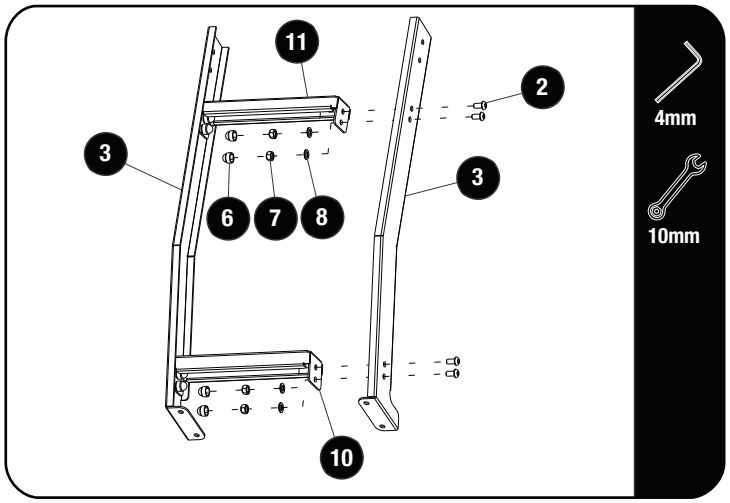

Assemble the Bottom LH and RH Ladder Sides (Item 3), Ladder Rung (Item 10) and Ladder Rung (Item 11) using eight M6x12 Button Head Screws, eight M6 Flat Washers and M6 Nyloc Nuts (Item 2, 8 & 7). Finish off by placing eight M6 Nut Caps (Item 6) over the M6 Nyloc Nuts.

2.3

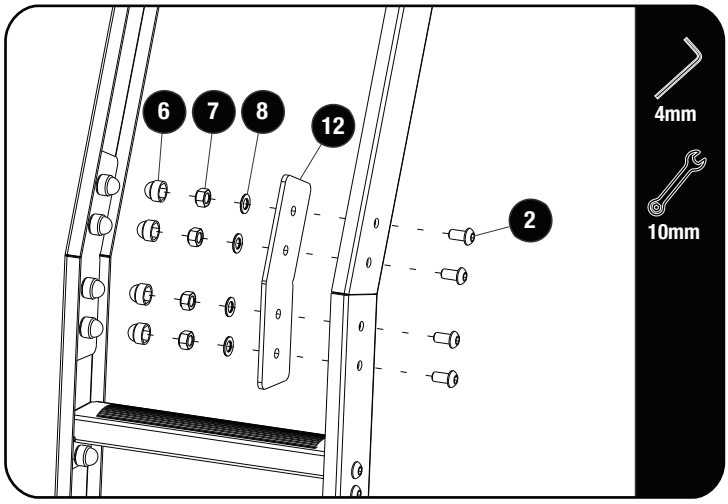

Assemble the Top Ladder assembly and Bottom Ladder assembly using the two Joiner Plates (Item 12), eight M6x12 Button Head Screws, eight M6 Flat Washers and eight M6 Nyloc Nuts (Item 2, 8 & 7). Finish off by placing eight M6 Nut Caps (Item 6) over the M6 Nyloc Nuts.

© 2020 FRONT RUNNER VEHICLE OUTFITTERS

2 FIT AND SECURE

2.4

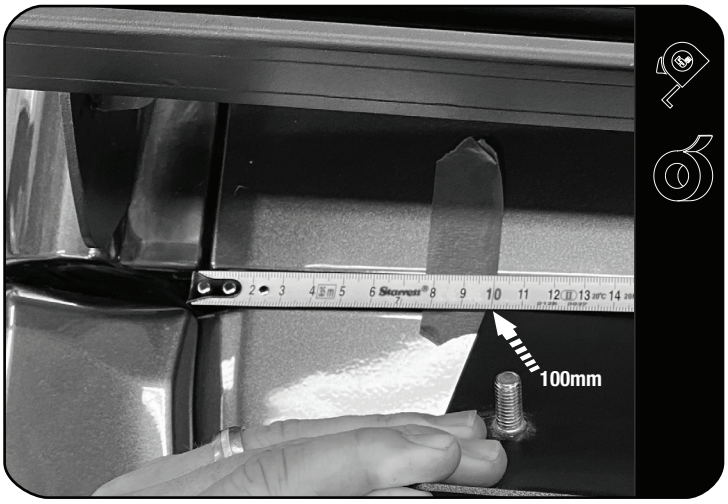

Measure 100mm from the inside edge of the spoiler trim, along the hatch edge and mark with masking tape as shown.

2.5

Clean the surface where the Top Mount Bracket (Item 19) wil be secured with De-Natured Alcohol.

Remove the backing tape of the self-adhesive tape on the bottom of the Top Mount Bracket and hook the Top Mount Bracket over the top hatch edge.

Position the Top Mount Bracket hook next to the masking tape.

Press on the front hook, making sure the hook is evenly pressed up against the hatch top edge.

Remove the masking tape and firmly press the Top Mount Bracket down to secure the bracket to the hatch.

2.6

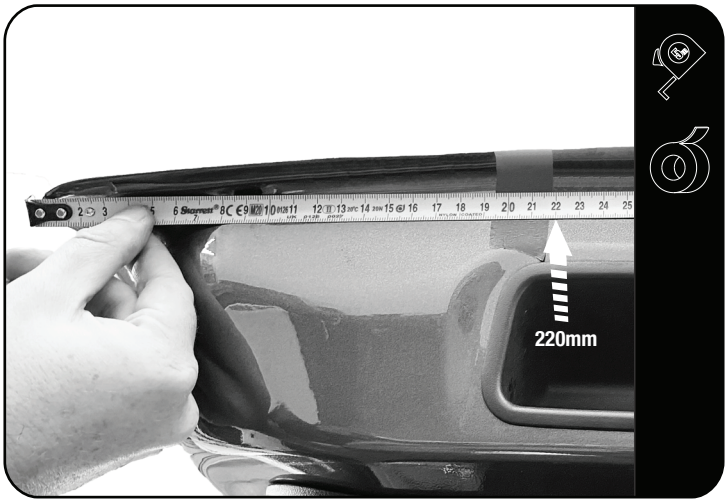

Open the rear hatch. Measure 220mm from the outside hatch edge and mark it with masking tape as shown.

© 2020 FRONT RUNNER VEHICLE OUTFITTERS

2 FIT AND SECURE

2.7

Clean the inside bottom edge lip using De-Natured Alcohol. Remove the backing tape from the self-adhesive tape on the Press Plate (Item 4) and firmly secure the Press Plate to the inside bottom edge lip as shown.

2.8

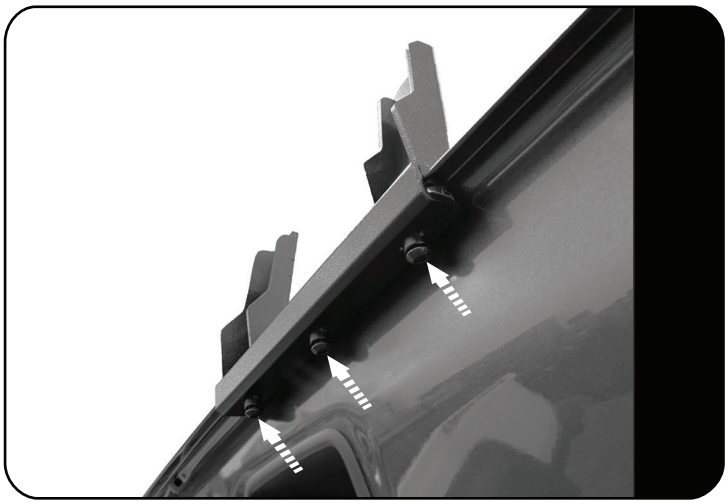

Loosely secure three M6x16 Button Head Screws to the Bottom Bracket (Item 9) and fit the Bottom Bracket over the bottom hatch lip and Press Plate. Hand tighten the M6x16 Button Head Screws to hold the Bottom Bracket in place.

Carefully close the hatch.

2.9

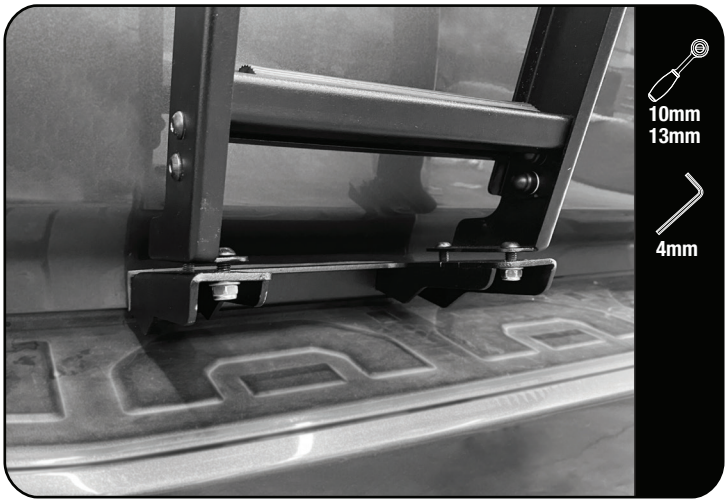

Hook the ladder over the studs in the Top Mount Bracket and lower the ladder. Loosely secure the ladder to the Bottom Bracket using four M6x16 Button Head Screws, four M6 Flat Washers and four M6 Nyloc Nuts (Item 5, 8 & 7).

Fully tighten the M6x16 Button Head Screws on the Bottom Bracket.

Fully secure the ladder to the Top Mount Bracket (Item 19) using two M8 Flat Washers and two M8 Nyloc Nuts (Item 16 & 17). Finish off by placing two M8 Nut Caps (Item 18) over the M8 Nyloc Nuts.

The Ladder Bottom and Bottom Bracket should be face to face.

TIP: Start with the forward LH and RH fasteners, alternating between the fasteners to pull the ladder down evenly.

Finish off by placing four M6 Nut Caps (Item 6) over the M6 Nyloc Nuts.

© 2020 FRONT RUNNER VEHICLE OUTFITTERS

2 FIT AND SECURE

2.10

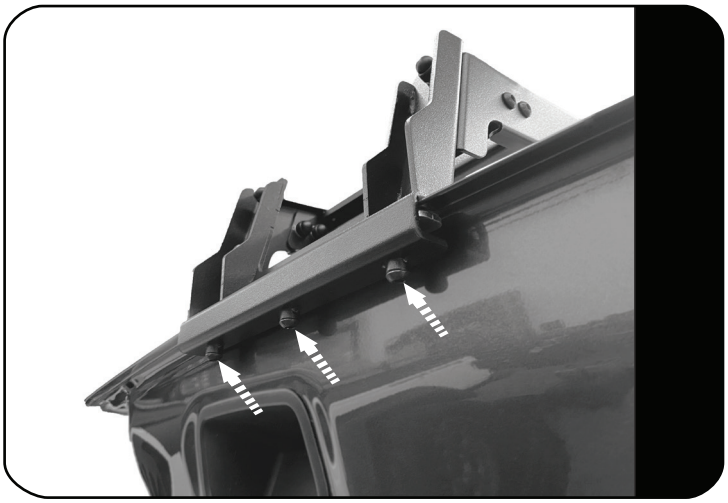

Open the rear hatch.

Fully tighten the three M6x16 Button Head Screws (Item 5).

3 FINISH

Congratulations! You did it. Take a step back and admire your work!

4 INSTALL OTHER VEHICLE AND RACK ACCESSORIES

Now's the time to visit your favorite Front Runner Dealer in person or online.

Be sure to tag us. We love to see our gear in action! #FrontRunnerOutfitters #BornToRoam

Share your adventures on:

© 2020 FRONT RUNNER VEHICLE OUTFITTERS