FRONT RUNNER

FORD RANGER T6.2 (2022-CURRENT) LOAD BED RACK MOUNTING SYSTEM

ENG

LASS046

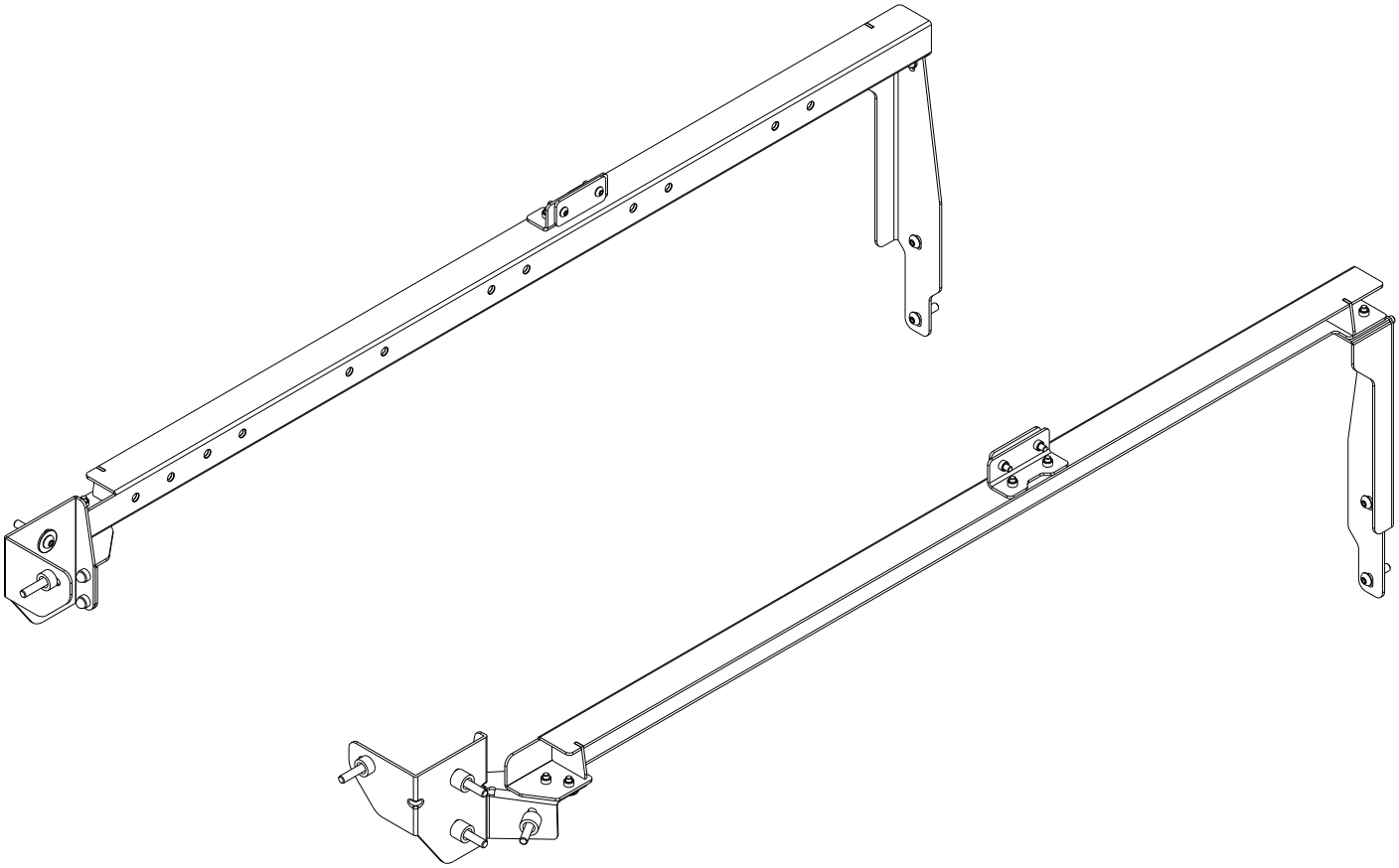

READ ME !

Thank you for purchasing a Front Runner Ford Ranger T6.2 (2022-Current) Load Bed Rack Mounting System.

Before you start, take a moment to familiarize yourself with the Fitting Instructions and the included components.

Refer to Page 2 for a list of all the components, quantities and tools required.

IMPORTANT WARNING!

IT IS CRITICAL THAT ALL FRONT RUNNER PRODUCTS BE PROPERLY AND SECURELY ASSEMBLED AND ATTACHED TO YOUR VEHICLE. IMPROPER ATTACHMENT COULD RESULT IN AN AUTOMOBILE ACCIDENT, AND COULD CAUSE SERIOUS BODILY INJURY OR DEATH. YOU ARE RESPONSIBLE FOR ASSEMBLING AND SECURING ALL FRONT RUNNER PRODUCTS TO YOUR VEHICLE, CHECKING THE ATTACHMENTS PRIOR TO USE, AND PERIODICALLY INSPECTING THE PRODUCTS FOR ADJUSTMENT, WEAR AND DAMAGE. THEREFORE, YOU MUST READ AND UNDERSTAND ALL OF THE INSTRUCTIONS AND PRECAUTIONS SUPPLIED WITH YOUR FRONT RUNNER PRODUCT PRIOR TO INSTALLATION OR USE. IF YOU DO NOT UNDERSTAND ALL OF THE INSTRUCTIONS AND CAUTIONS, OR IF YOU HAVE NO MECHANICAL EXPERIENCE AND ARE NOT THOROUGHLY FAMILIAR WITH THE INSTALLATION PROCEDURES, YOU SHOULD HAVE THE PRODUCT INSTALLED BY A PROFESSIONAL INSTALLER OR OTHER QUALIFIED PERSONNEL.

NOTE: Front Runner will not be responsible for any damage caused by the failure to install the product according to these instructions.

Please call us if you have any questions about the installation of this product.

© 2024 FRONT RUNNER VEHICLE OUTFITTERS

1 GET ORGANIZED

IN THE BOX

1	1 X	Right Hand Side Rail
2	1 X	Left Hand Side Rail
3	1 X	Rear Bracket RHS
4	2 X	M8 x 16 x 1.6 Flat Washer
5	12 X	M6 x 19 x 1 Flat Washer
6	2 X	M8 x 25 Button Head Screw
7	16 X	M6 x 16 Button Head Screw
8	1 X	Rear Bracket LHS
9	2 X	Center Mounting Bracket
10	4 X	M 8 x 30 Button Head Screw
11	2 X	Protector Plate
12	4 X	M6 x 20 Button Head Screw
14	1 X	Front Gusset LHS
15	1 X	Front Gusset RHS
16	1 X	Front Corner Support RHS

IN THE BOX

17	1 X	Front Corner Support LHS
18	6 X	Space 19 x 12.5 x15
19	8 X	M8 x 25 x 2 Flat Washer
20	8 X	M8 x 45 Button Head Screw
21	4 X	M6 Nyloc Nut
22	4 X	M6 Nut Cap
23	2 X	Spacer 19 x 12.58 x 10

TOOLS NEEDED

Torx T40

4mm
5mm

FIGURE 1.1

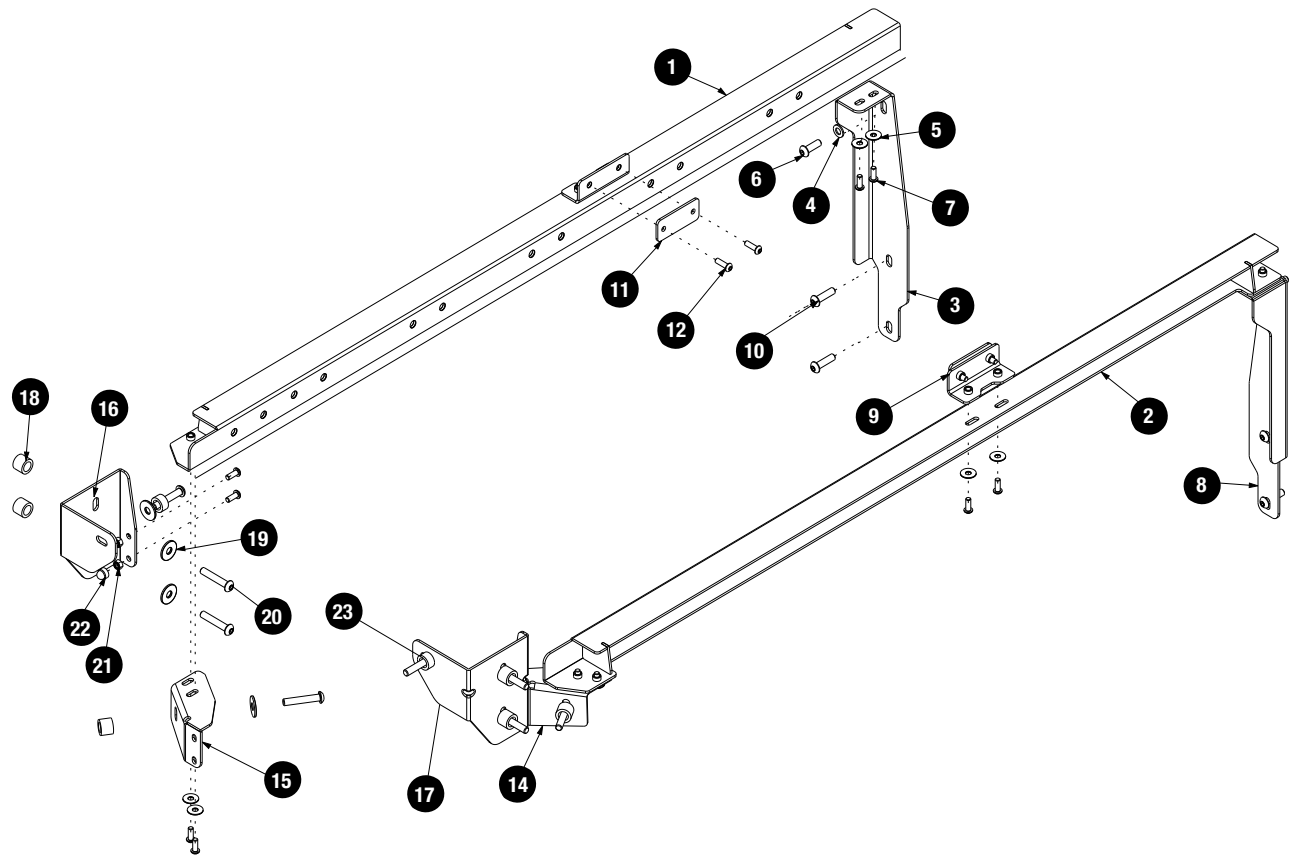

 © 2024 FRONT RUNNER VEHICLE OUTFITTERS

2 FIT AND SECURE

2.1

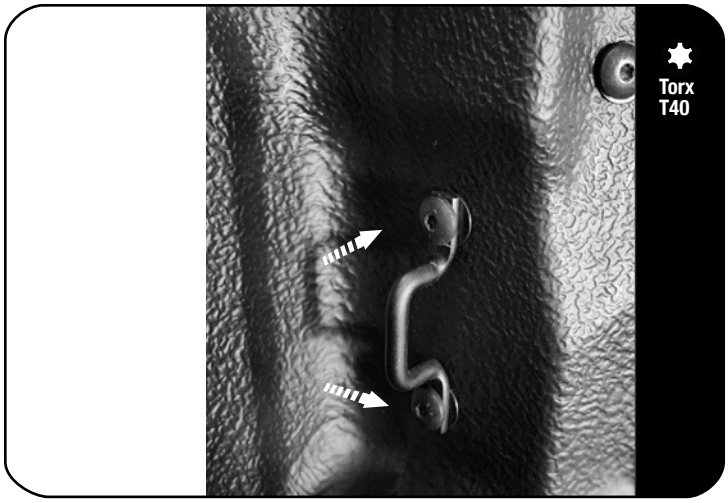

Remove the 4 T40 Torx bolts holding the rear tie down point to your vehicle.

2.2

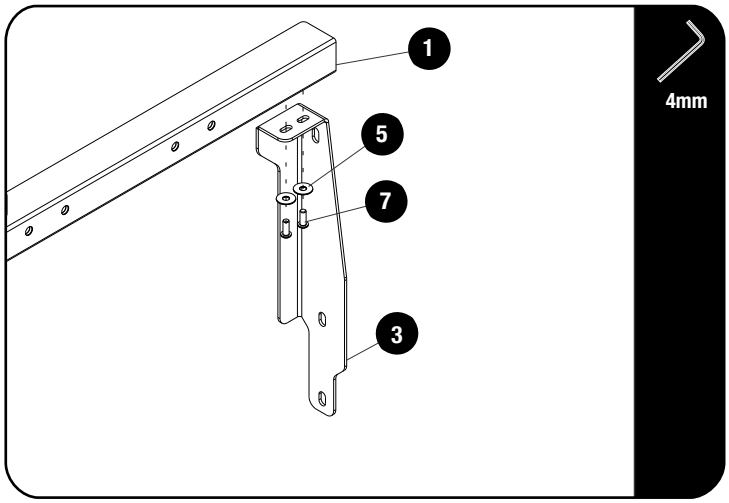

Loosely assemble the Right Hand Side Rear Bracket (Item 3) and the Right Hand Side Rail (Item 1) using M6 x 16 Button Head Screws (Item 7) and M6 x 12 x 1 Flat Washer (Item 5)

Do the same for the left hand side.

2.3

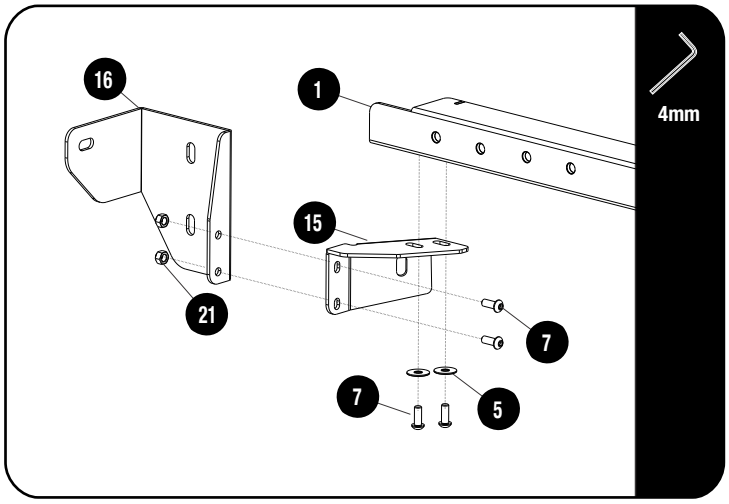

Loosely assemble the Right Hand Side Front Gusset (Item 15) and the Right Hand Side Rail (Item 1) using M6 x 16 Button Head Screws (Item 7) and M6 x 19 x 1 Flat Washer (Item 5).

Loosely assemble the Right Hand Front Corner Support Bracket (Item 16) to the Right Had Side Front Gusset (Item 15) using M6 x 16 Button Head Screws (Item 7) and M6 Nyloc Nut (Item 21).

DO NOT FULLY TIGHTEN.

Do the same for the left hand side.

© 2024 FRONT RUNNER VEHICLE OUTFITTERS

2 FIT AND SECURE

2.4

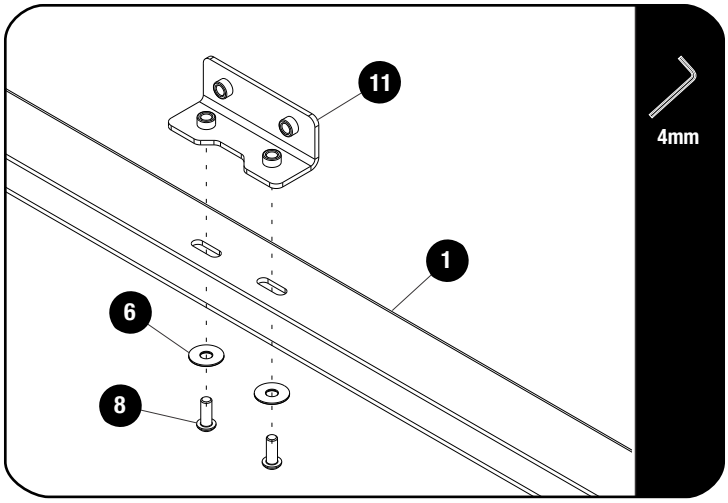

Loosely assemble the Center Bracket (Item 11) to your Right Hand Side Rail (Item 1) using M6 x 16 Button Head Screw (Item 8) and M6 x 12 x 1 Flat Washer (Item 6)

Do the same for the left hand side.

2.5

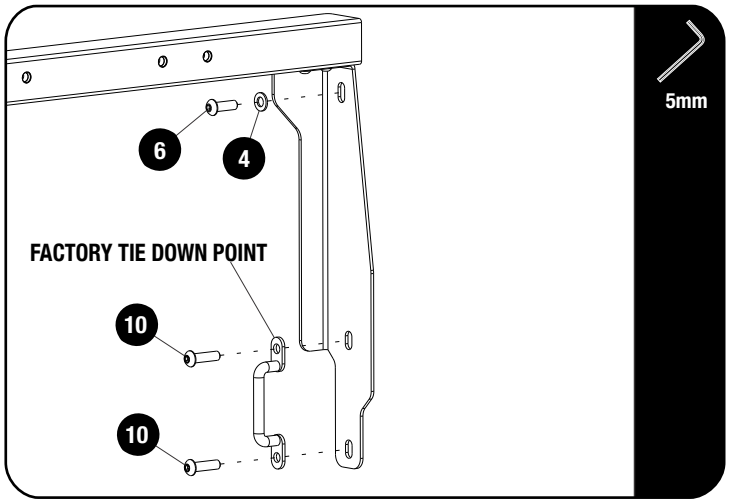

Loosely bolt the Rear Brackets you assembled in step 2.2 to the mounting holes where you removed the tie down point in the rear using M8 x 30 Button Head Screws (Item 10), M8 x 25 Button Head Screw (Item 7) and M8 x 16 x 1.6 Flat Washer (Item 5).

Do this for both Left Hand Side and Right Hand Side.

Remember to reinstall your tie down point using the new hardware

2.6

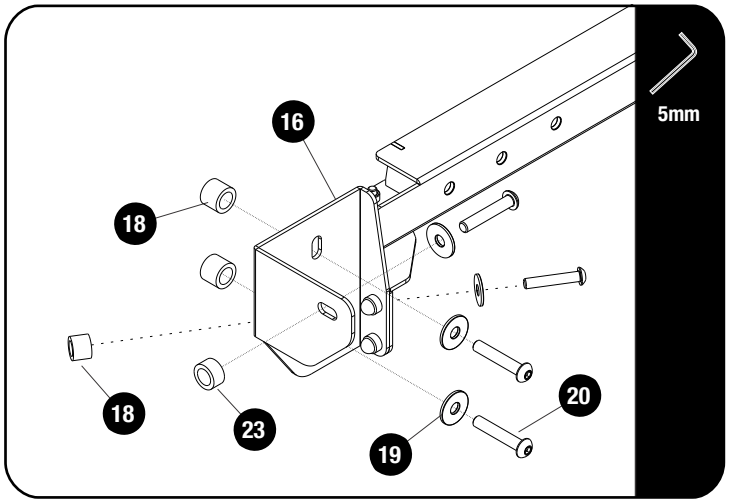

Loosely bolt the front assembly from 2.3 to the mounting holes in the front of the load bed using M8 x 45 Button Head Screws (Item 20) M8 x 25 x 2 Flat Washer (Item 19) and 19 x 12.5 x 15 Spacer (Item 18) and 19 x 12.58 x 10 Spacer (Item 23).

Refer to the image in 2.7.

Do this for both the Left Hand Side and Right Hand Side.

Depending if you have a load bed liner installed and what make and model it is, Item 18 (15mm Spacers) may not be used.

You may also need to drill into the lining if it covers the OEM mounting points.

 © 2024 FRONT RUNNER VEHICLE OUTFITTERS

2 FIT AND SECURE

2.7

2.8

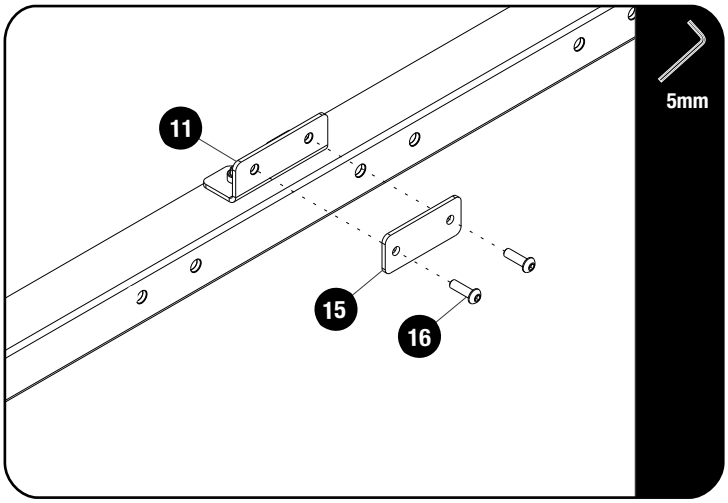

Bolt the protector plate (Item 15) to the Center Bracket (Item 11) using the M6 x 20 Button Head Bolts (Item 16).

Do the same for the left hand side.

2.9

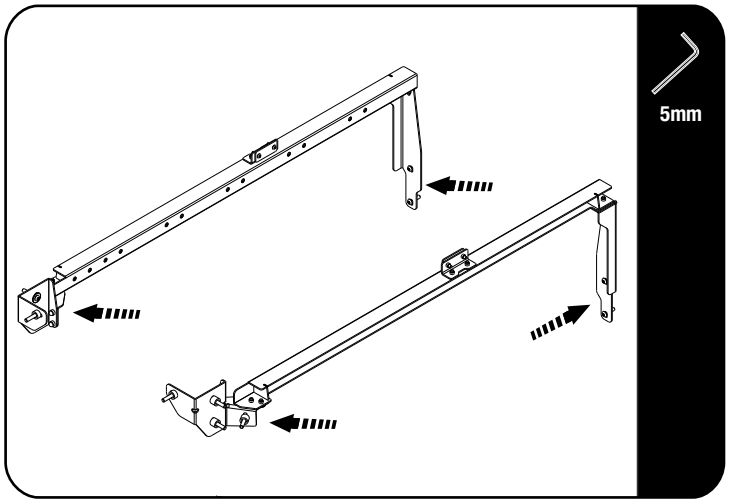

Fully tighten all the bolts as shown.

<u>Tightening Torque</u>:

M8 : 15-20Nm / 11.06 ft lb - 14.75 ft lb

© 2024 FRONT RUNNER VEHICLE OUTFITTERS

2 FIT AND SECURE

2.10

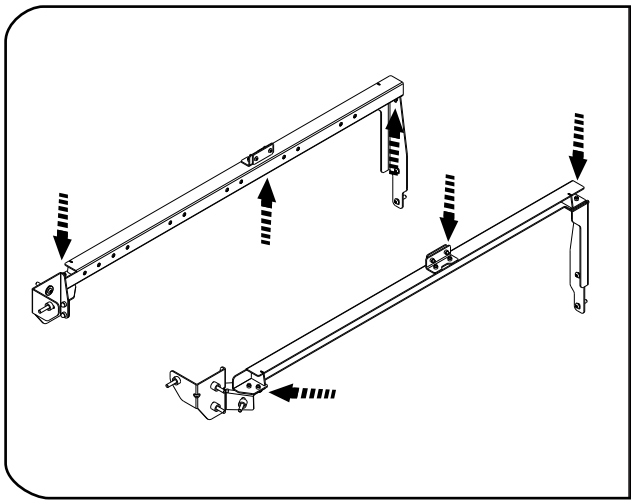

5mm

Fully tighten all the bolts as shown.

Install Nut caps (Item 22) to nyloc nuts (Item 21) installed in step 2.3

Tightening Torque:

M6 : 8-10Nm / 5.9 ft lb - 7.38 ft lb

3 FINISH

Congratulations! You did it. Take a step back and admire your work!

4 INSTALL OTHER VEHICLE AND RACK ACCESSORIES

Now's the time to visit your favorite Front Runner Dealer in person or online.

Be sure to tag us. We love to see our gear in action! #FrontRunnerOutfitters #BornToRoam

Share your adventures on:

© 2024 FRONT RUNNER VEHICLE OUTFITTERS