FRONT RUNNER

SUZUKI JIMNY (2018-CURRENT) LADDER

ENG

LASJ002

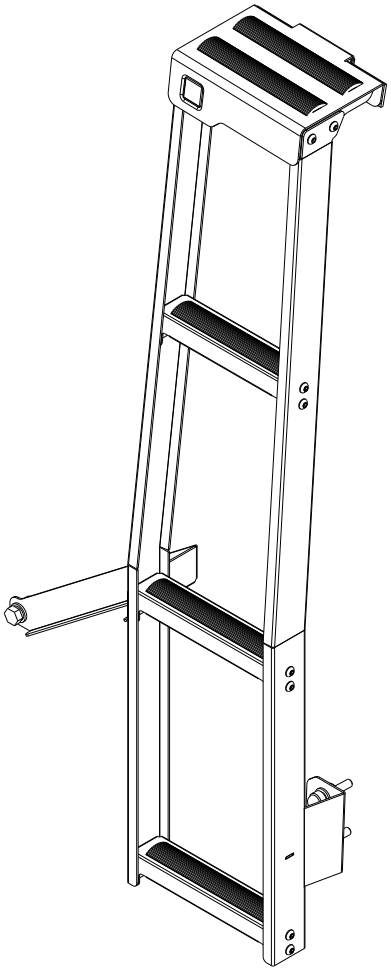

READ ME !

Thank you for purchasing a Front Runner Suzuki Jimny (2018-Current) Ladder.

Before you start, take a moment to familiarize yourself with the Fitting Instructions and the components received.

Refer to Page 2 for a list of all the components, quantities and tools required.

IMPORTANT WARNING!

IT IS CRITICAL THAT ALL FRONT RUNNER PRODUCTS BE PROPERLY AND SECURELY ASSEMBLED AND ATTACHED TO YOUR VEHICLE. IMPROPER ATTACHMENT COULD RESULT IN AN AUTOMOBILE ACCIDENT, AND COULD CAUSE SERIOUS BODILY INJURY OR DEATH. YOU ARE RESPONSIBLE FOR ASSEMBLING AND SECURING ALL FRONT RUNNER PRODUCTS TO YOUR VEHICLE, CHECKING THE ATTACHMENTS PRIOR TO USE, AND PERIODICALLY INSPECTING THE PRODUCTS FOR ADJUSTMENT, WEAR AND DAMAGE. THEREFORE, YOU MUST READ AND UNDERSTAND ALL OF THE INSTRUCTIONS AND PRECAUTIONS SUPPLIED WITH YOUR FRONT RUNNER PRODUCT PRIOR TO INSTALLATION OR USE. IF YOU DO NOT UNDERSTAND ALL OF THE INSTRUCTIONS AND CAUTIONS, OR IF YOU HAVE NO MECHANICAL EXPERIENCE AND ARE NOT THOROUGHLY FAMILIAR WITH THE INSTALLATION PROCEDURES, YOU SHOULD HAVE THE PRODUCT INSTALLED BY A PROFESSIONAL INSTALLER OR OTHER QUALIFIED PERSONNEL.

NOTE: Front Runner will not be responsible for any damage caused by the failure to install the product according to these instructions.

Please call us if you have any questions about the installation of this product.

© 2020 FRONT RUNNER VEHICLE OUTFITTERS

1 GET ORGANIZED

IN THE BOX

1	1 X	Ladder Top Assembly
2	16 X	M6 Flat Washer
3	16 X	M6 Nyloc Nut
4	16 X	M6 Nut Cap
5	1 X	Right Hand Ladder Side
6	1 X	Ladder Rung - SJ2
7	10 X	M6 x 12 Button Head Screw
8	2 X	M8 Nut Cap
9	2 X	M8 x 40 Hex Screw
10	2 X	M8 Spring Washer
11	2 X	M8 x 19 x 2 Flat Washer
12	2 X	Ladder Rung - SJ1
13	2 X	12mm Spacer
14	2 X	M6 x 16 Button Head Screw
15	1 X	M10 x 40 x 1.25 Hex Bolt
16	1 X	M10 Spring Washer
17	1 X	M10 Flat Washer
18	1 X	15mm Spacer
19	1 X	Ladder Support Arm
20	1 X	Left Hand Ladder Side
21	4 X	M6 x 16 Button Head Screw

TOOLS NEEDED

FIGURE 1.1

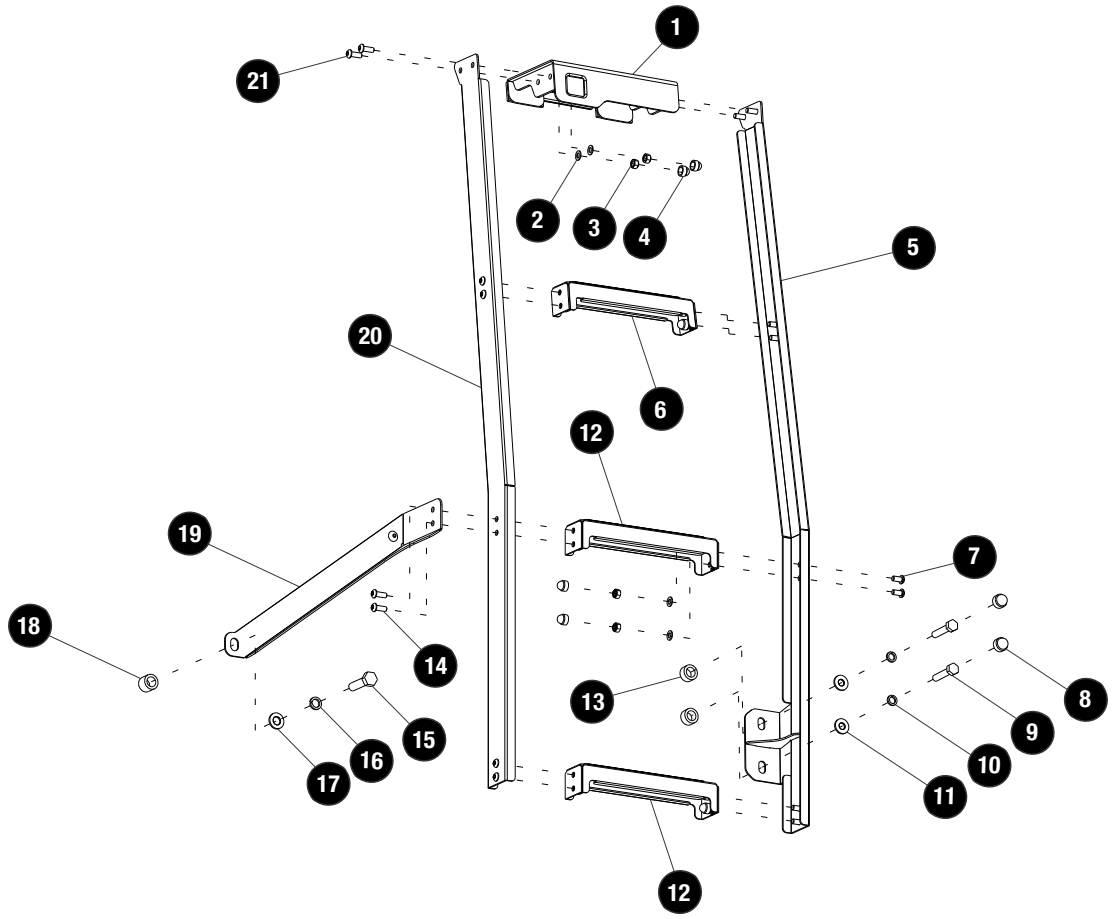

 © 2020 FRONT RUNNER VEHICLE OUTFITTERS

2 PREPARE

2.1

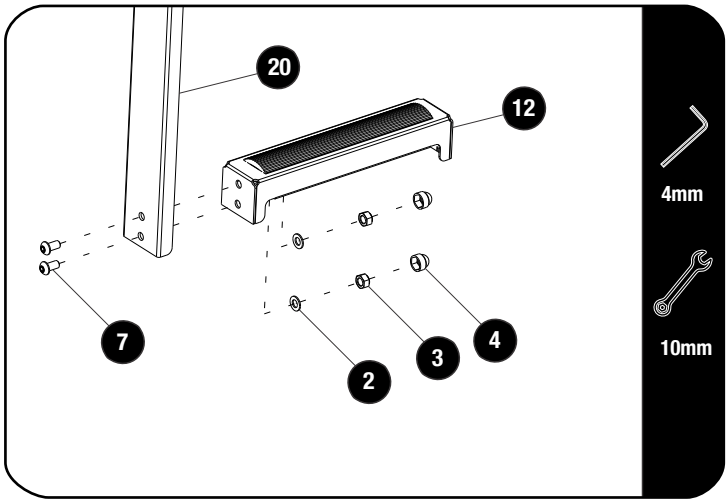

Secure 1 of 2 Ladder Rungs (Item 12) to the Left Hand Ladder Side (Item 20) using two M6x12 Button Head Screws, two M6 Flat Washers and two M6 Nyloc Nuts (Item 7, 2 & 3). Finish off by placing two M6 Nut Caps (Item 4) on the M6 Nyloc Nuts.

2.2

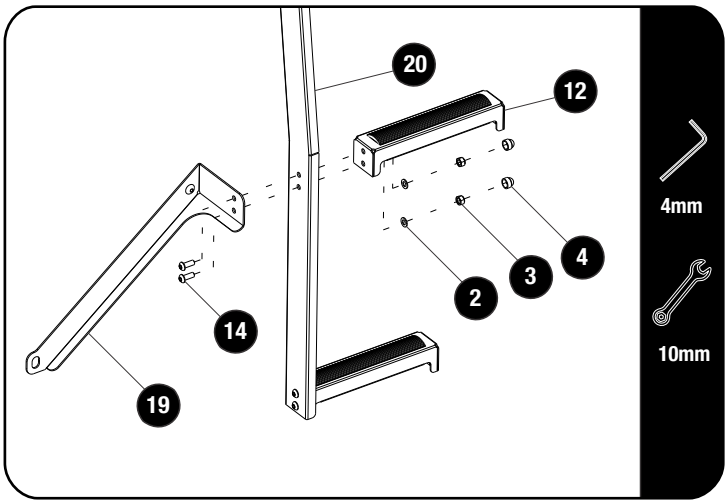

Secure the 2nd Ladder Rung (Item 12) and the Ladder Support Arm (Item 19) to the Left Hand Ladder Side (Item 20) using two M6x16 Button Head Screws, two M6 Flat Washers and two M6 Nyloc Nuts (Item 14, 2 & 3). Finish off by placing two M6 Nut Caps (Item 4) on the M6 Nyloc Nuts.

2.3

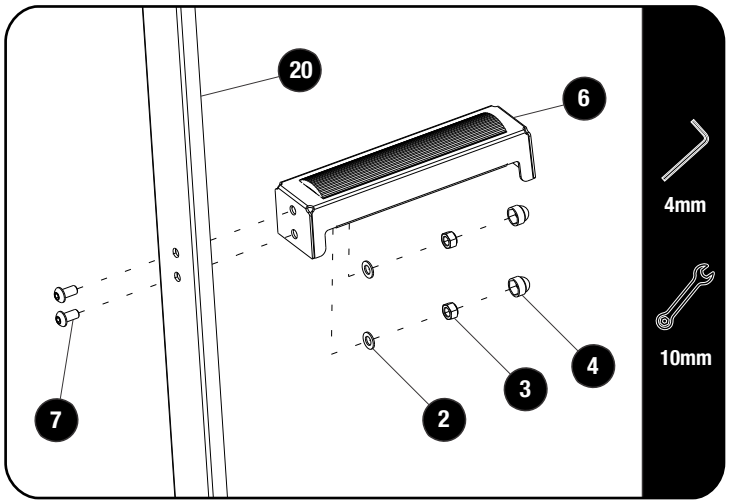

Secure Ladder Rungs (Item 6) to the Left Hand Ladder Side (Item 20) using two M6x12 Button Head Screws, two M6 Flat Washers and two M6 Nyloc Nuts (Item 7, 2 & 3). Finish off by placing two M6 Nut Caps (Item 4) on the M6 Nyloc Nuts.

© 2020 FRONT RUNNER VEHICLE OUTFITTERS

2 PREPARE

2.4

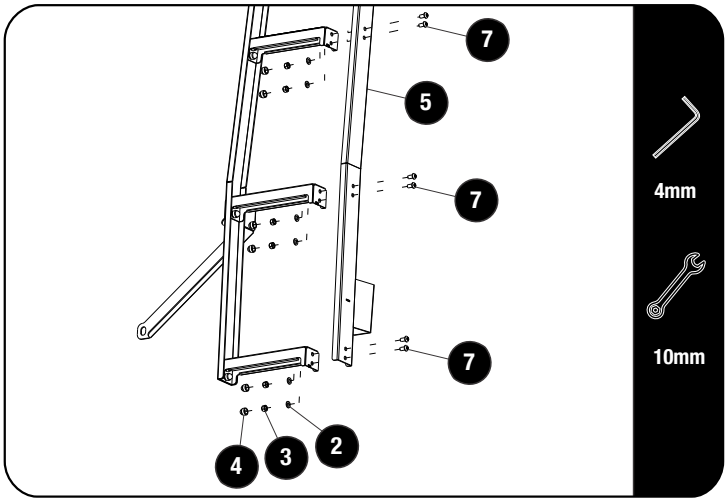

Secure the Right Hand Ladder Side (Item 5) to the already secured Ladder Rungs using six M6x12 Button Head Screws, six M6 Flat Washers and six M6 Nyloc Nuts (Item 7, 2 & 3). Finish off by placing six M6 Nut Caps (Item 4) on the M6 Nyloc Nuts.

2.5

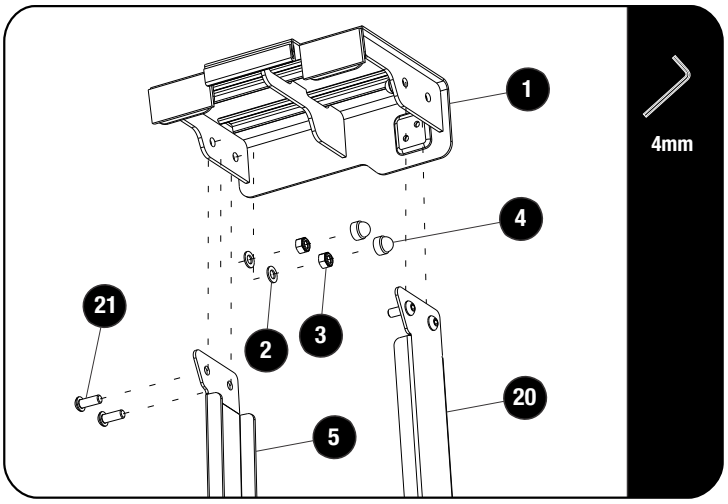

Secure the Ladder Top Assembly (Item 1) between the Ladder Sides (Item 5 & 20) using four M6x16 Button Head Screws, four M6 Flat Washers, four M6 Nyloc Nuts (Item 21, 2 & 3). Finish off by placing four M6 Nut Caps (Item 4) on the M6 Nyloc Nuts.

 © 2020 FRONT RUNNER VEHICLE OUTFITTERS

3 FIT AND SECURE

3.1

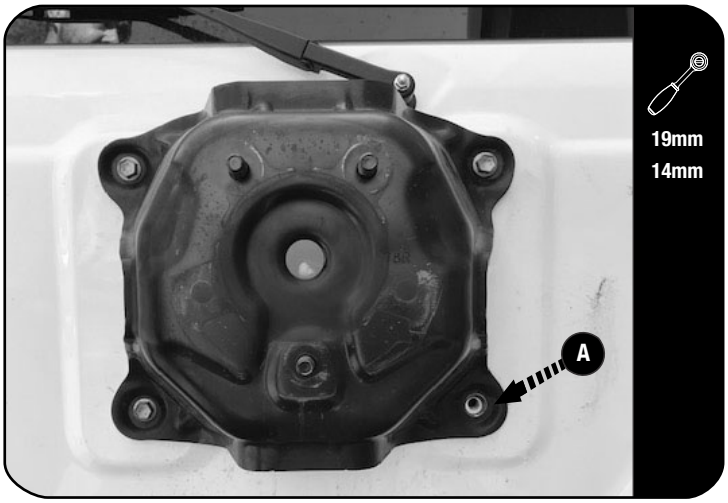

Remove the spare wheel from the spare wheel carrier.

A Loosen and remove the bottom, right hand screw of the spare wheel carrier.

3.2

Unclip and remove the bottom hinge cover.

A Loosen and remove the two hinge screws.

3.3

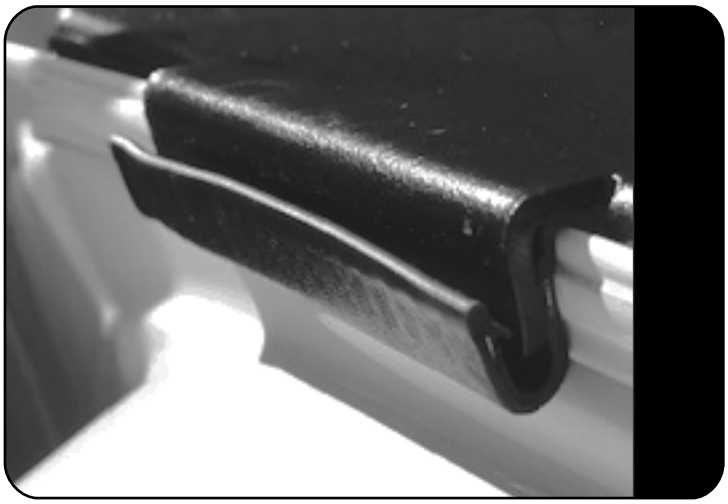

Carefully open the rear door. Do not let the rear door swing open.

Hook the top of the Ladder over the top edge on the right hand side of the door and align the Ladder mounting slots with the hinge bolt holes and the bottom hole of the spare wheel carrier.

 © 2020 FRONT RUNNER VEHICLE OUTFITTERS

3 FIT AND SECURE

3.4

13mm

Insert the two 10mm Spacers (Item 13) between the Hinge and the Ladder. Guide the M8x40 Hex Bolt with a M8 Spring Washer and M8 Flat Washer through each mounting slot and spacer and loosely tighten (Item 9, 10 & 11).

3.5

17mm

Insert the 15mm Spacer (Item 18) between the spare wheel carrier and the Ladder Support Arm (Item 19). Guide the M10x40x1.25 Hex Bolt with an M10 Spring Washer and an M10 Flat Washer through the mounting slot and spacer and loosely tighten (Item 15, 16 & 17).

3.6

13mm
17mm
19mm

Fully tighten the Screws in 3.4 and 3.5. Finish off by placing M8 Nut Caps (Item 8) on the M8x40 Hex Screw heads in 3.4. Refit the spare wheel to the spare wheel carrier.

© 2020 FRONT RUNNER VEHICLE OUTFITTERS

4 FINISH

Congratulations! You did it. Take a step back and admire your work!

5 INSTALL OTHER VEHICLE AND RACK ACCESSORIES

Now's the time to visit your favorite Front Runner Dealer in person or online.

Be sure to tag us. We love to see our gear in action! #FrontRunnerOutfitters #BornToRoam

Share your adventures on:

© 2020 FRONT RUNNER VEHICLE OUTFITTERS