FRONT RUNNER

MERCEDES GELANDEWAGEN G CLASS (1979-2018)

ENG

LAMG002

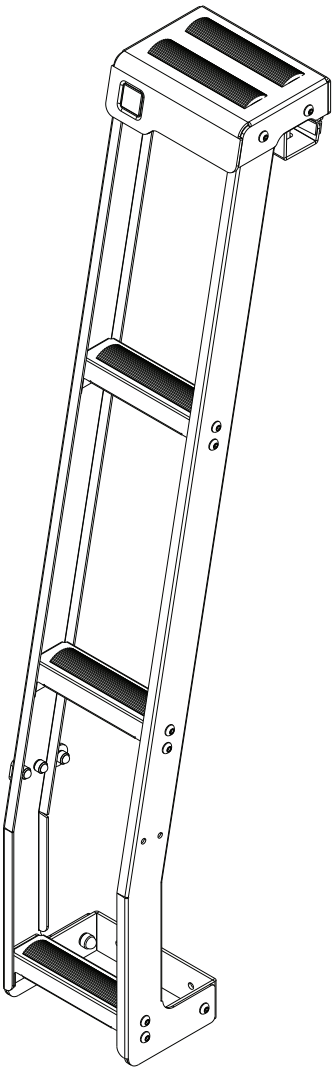

READ ME !

Thank you for purchasing Front Runner Mercedes Gelandewagen G Class (1979-2018) Ladder.

Before you start, take a moment to familiarize yourself with the Fitting Instructions and the components received.

Refer to Page 2 for a list of all the components, quantities and tools required.

IMPORTANT WARNING!

IT IS CRITICAL THAT ALL FRONT RUNNER PRODUCTS BE PROPERLY AND SECURELY ASSEMBLED AND ATTACHED TO YOUR VEHICLE. IMPROPER ATTACHMENT COULD RESULT IN AN AUTOMOBILE ACCIDENT, AND COULD CAUSE SERIOUS BODILY INJURY OR DEATH. YOU ARE RESPONSIBLE FOR ASSEMBLING AND SECURING ALL FRONT RUNNER PRODUCTS TO YOUR VEHICLE, CHECKING THE ATTACHMENTS PRIOR TO USE, AND PERIODICALLY INSPECTING THE PRODUCTS FOR ADJUSTMENT, WEAR AND DAMAGE. THEREFORE, YOU MUST READ AND UNDERSTAND ALL OF THE INSTRUCTIONS AND PRECAUTIONS SUPPLIED WITH YOUR FRONT RUNNER PRODUCT PRIOR TO INSTALLATION OR USE. IF YOU DO NOT UNDERSTAND ALL OF THE INSTRUCTIONS AND CAUTIONS, OR IF YOU HAVE NO MECHANICAL EXPERIENCE AND ARE NOT THOROUGHLY FAMILIAR WITH THE INSTALLATION PROCEDURES, YOU SHOULD HAVE THE PRODUCT INSTALLED BY A PROFESSIONAL INSTALLER OR OTHER QUALIFIED PERSONNEL.

NOTE: Front Runner will not be responsible for any damage caused by the failure to install the product according to these instructions.

Please call us if you have any questions about the installation of this product.

© 2020 FRONT RUNNER VEHICLE OUTFITTERS

1 GET ORGANIZED

IN THE BOX

1	1 X	Ladder Top Clamp LH
2	1 X	Gutter Clamp LH
3	1 X	Ladder Top Clamp RH
4	1 X	Gutter Clamp RH
5	1 X	Ladder Side LH
6	8 X	M6 x 12 Button Head Screw
7	1 X	Bump Stop Plate
8	1 X	M5 x 16 Button Head Screw
9	1 X	Bump Stop
10	2 X	M5 x 10 Button Head Screw
11	3 X	M5 Flat Washer
12	3 X	M5 Nyloc Nut
13	3 X	M5 Nut Cap
14	10 X	M6 x 16 Button Head Screw
15	1 X	Bottom Support
16	1 X	Ladder Rung - MG2
17	14 X	M6 Nut Cap
18	18 X	M6 Nyloc Nut
19	20 X	M6 Flat Washer

IN THE BOX

20	2 X	Ladder Rung - MG1
21	1 X	Ladder Side RH
22	2 X	M6 x 60 Cap Screw
23	4 X	M6 Spring Washer
24	2 X	M6 x 19 x 1SS Flat Washer
25	2 X	M6 x 16 Hex Head Bolt
26	2 X	M6 Black Nylon Flat Washer

TOOLS NEEDED

3mm
4mm
5mm

8mm
10mm

Denatured
Alcohol

FIGURE 1.1

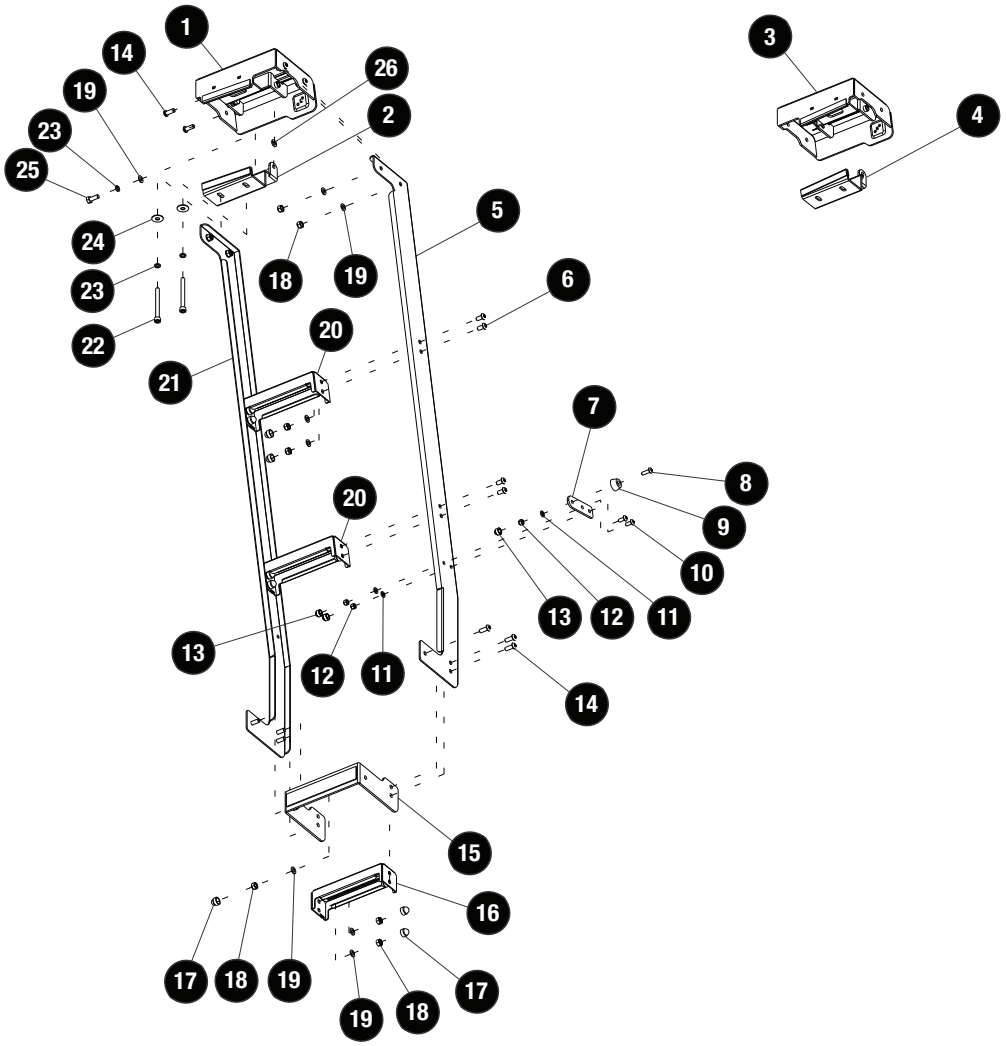

 © 2020 FRONT RUNNER VEHICLE OUTFITTERS

2 FIT AND SECURE

2.1

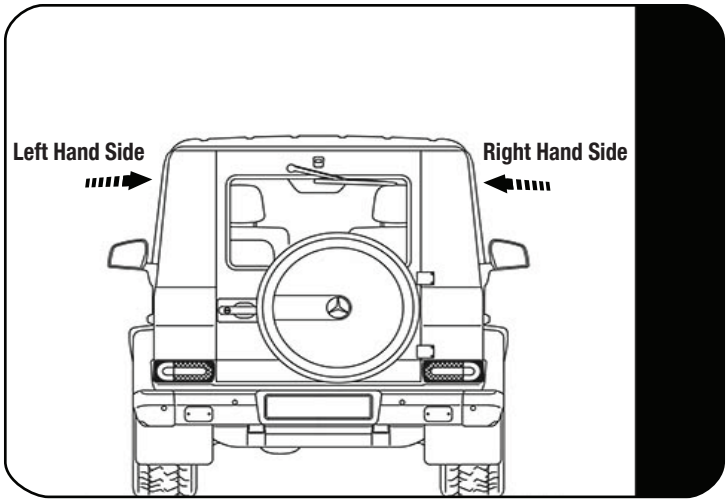

The door opening side will determine which side the ladder will be installed.

If the rear door opens to the right hand side, the ladder must be installed on the left hand side of the vehicle as shown.

2.2

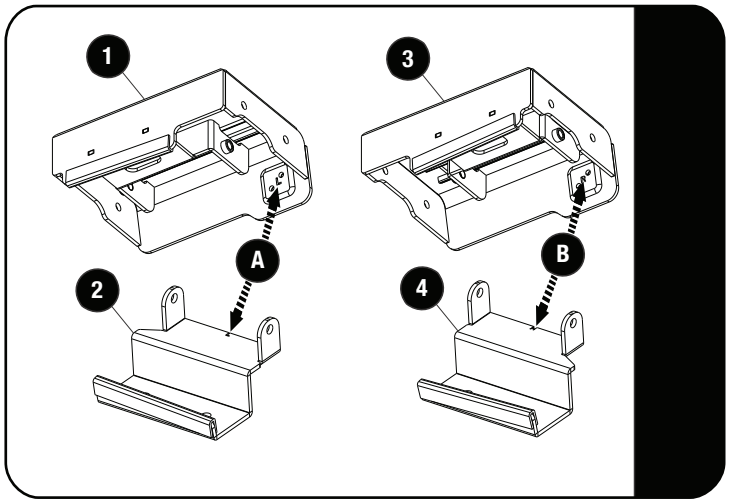

Identify the Ladder Top Clamp and Gutter Clamp you will use during the ladder assembly.

A L = Left Hand Side identifier

Use the Ladder Top Mount LH (Item 1) with the Gutter Clamp LH (Item 2) for a left hand side installation.

B R = Right Hand Side identifier

Use the Ladder Top Mount RH (Item 3) with the Gutter Clamp RH (Item 4) for a right hand side installation.

2.3

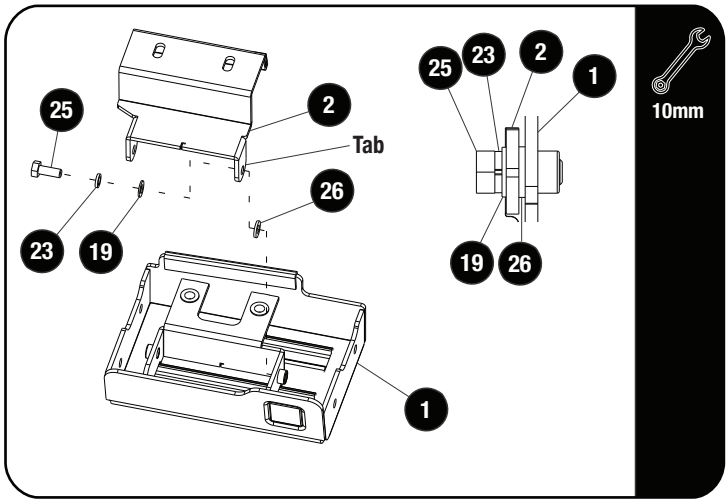

For the purpose of this fitment guide a left hand assembly and installation will be shown.

Assemble the Gutter Clamp LH (Item 2) to the Ladder Top Clamp LH (Item 1) using two M6x16 Hex Head Bolts, two M6 Spring Washers and two M6 Flat Washers (Item 25, 23 & 19). Insure to insert two M6 Black Nylon Washers (Item 26) between the Gutter Clamp tabs and the holes provided in the the Ladder Top Clamp.

© 2020 FRONT RUNNER VEHICLE OUTFITTERS

2 FIT AND SECURE

2.4

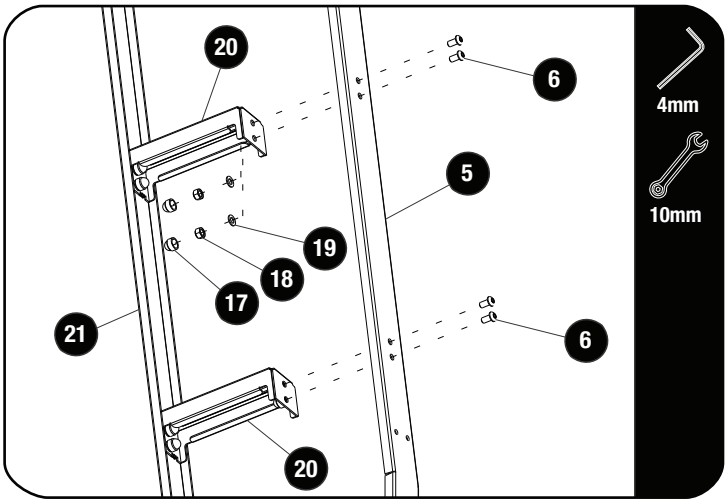

Assemble the two Ladder Rungs (Item 20) to the Ladder Side RH (Item 21) and then assemble Ladder Side LH (Item 5) as shown, using eight M6x12 Button Head Screws, eight M6 Flat Washers and eight M6 Nyloc Nuts (Item 6, 19 & 18). Finish off by placing eight M6 Nut Caps (Item 17) on the M6 Nyloc Nuts.

2.5

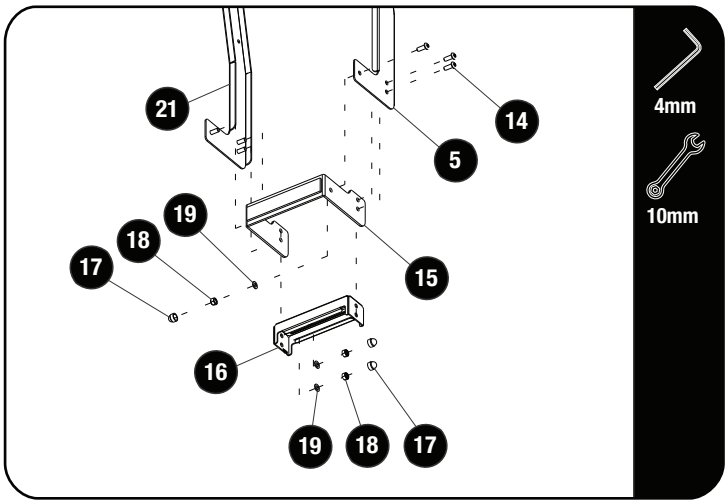

Assemble the Bottom Support (Item 15) and the Ladder Rung (Item 16) to the assembly in 2.4 using six M6x16 Button Head Screws, six M6 Flat Washers and six M6 Nyloc Nuts (Item 14, 19 & 18). Finish off by placing six M6 Nut Caps (Item 17) on the M6 Nyloc Nuts.

2.6

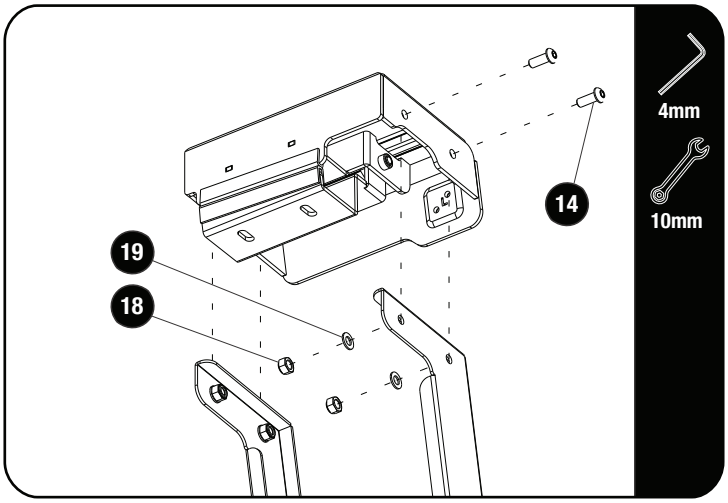

Assemble the Ladder Top in 2.3 to the assembly in 2.5 using four M6x16 Button Head Screw, four M6 Flat Washers and four M6 Nyloc Nuts (Item 14, 19 & 18)

© 2020 FRONT RUNNER VEHICLE OUTFITTERS

2 FIT AND SECURE

2.7

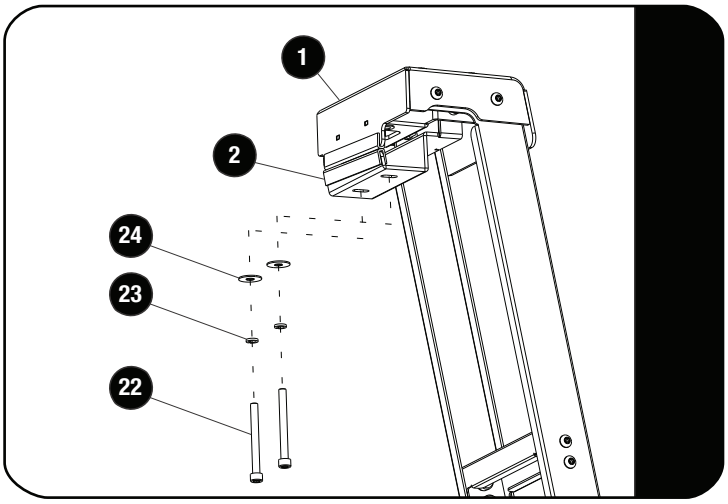

Loosely insert two M6x60 Cap Screws with two M6 Spring Washers and two M6x19x1SS Flat Washers (Item 22, 23 & 24) through the Gutter Clamp LH (Item 2) into the Ladder Top Clamp LH (Item 1) as shown.

2.8

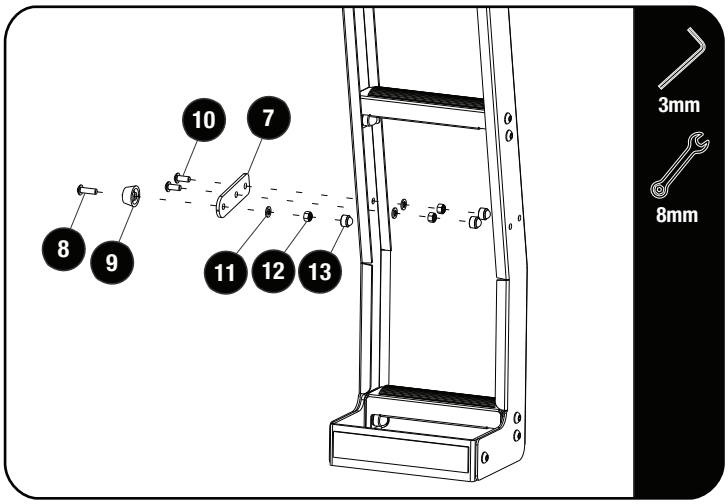

Assemble the Bump Stop (Item 9) to the Bump Stop Plate (Item 7) using the M5x16 Button Head Screw, one M5 Flat Washer and one M5 Nyloc Nut (Item 8, 11 & 12). Assemble the Bump Stop assembly to the right hand side (left hand side for RH installation) of the ladder using two M5x10 Button Head Screws, two M5 Flat Washers and two M5 Nyloc Nuts (Item 10, 11& 12). Finishing off placing three M5 Nut Caps (Item 13) on the M5 Nyloc Nuts.

2.9

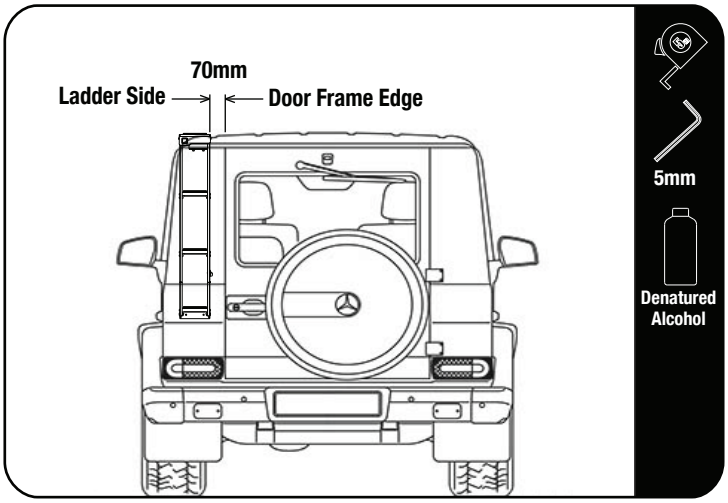

Swing open the Gutter Clamp. Fit the top assembly into vehicle's gutter and let the Bottom Support rest against the vehicle. Align and space the Ladder Side at the top and the Ladder Side at the bottom, 70mm away from door frame edge.

Fully tighten the two M6 x 60 Cap Screws, clamping the Ladder to the gutter.

Clean the surface area where the Double Sided Tape rests against the vehicle with Denatured Alcohol.

Make sure the spacing at the top and bottom is 70mm from the Door Frame Edge.

Remove the backing tape from the Double Sided Tape and firmly push and secure the bottom of the ladder against the vehicle.

© 2020 FRONT RUNNER VEHICLE OUTFITTERS

3

FINISH

Congratulations! You did it. Take a step back and admire your work!

4

INSTALL OTHER VEHICLE AND RACK ACCESSORIES

Now's the time to visit your favorite Front Runner Dealer in person or online.

Be sure to tag us. We love to see our gear in action! #FrontRunnerOutfitters #BornToRoam

Share your adventures on:

© 2020 FRONT RUNNER VEHICLE OUTFITTERS