FRONT RUNNER UNIVERSAL VEHICLE LADDER/TALL

ENG

LADD020

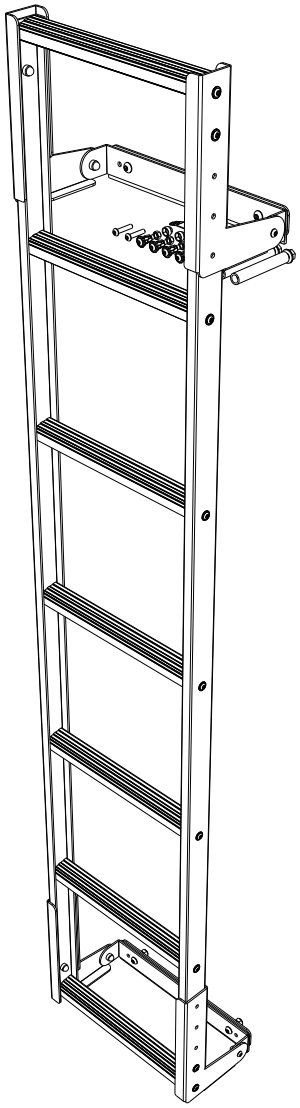

READ ME !

Thank you for purchasing a Front Runner Universal Vehicle Ladder / Tall.

Before you start, take a moment to familiarize yourself with the Fitting Instructions and the included components.

Refer to Page 2 for a list of all the components, quantities and tools required.

IMPORTANT WARNING!

IT IS CRITICAL THAT ALL FRONT RUNNER PRODUCTS BE PROPERLY AND SECURELY ASSEMBLED AND ATTACHED TO YOUR VEHICLE. IMPROPER ATTACHMENT COULD RESULT IN AN AUTOMOBILE ACCIDENT, AND COULD CAUSE SERIOUS BODILY INJURY OR DEATH. YOU ARE RESPONSIBLE FOR ASSEMBLING AND SECURING ALL FRONT RUNNER PRODUCTS TO YOUR VEHICLE, CHECKING THE ATTACHMENTS PRIOR TO USE, AND PERIODICALLY INSPECTING THE PRODUCTS FOR ADJUSTMENT, WEAR AND DAMAGE. THEREFORE, YOU MUST READ AND UNDERSTAND ALL OF THE INSTRUCTIONS AND PRECAUTIONS SUPPLIED WITH YOUR FRONT RUNNER PRODUCT PRIOR TO INSTALLATION OR USE. IF YOU DO NOT UNDERSTAND ALL OF THE INSTRUCTIONS AND CAUTIONS, OR IF YOU HAVE NO MECHANICAL EXPERIENCE AND ARE NOT THOROUGHLY FAMILIAR WITH THE INSTALLATION PROCEDURES, YOU SHOULD HAVE THE PRODUCT INSTALLED BY A PROFESSIONAL INSTALLER OR OTHER QUALIFIED PERSONNEL.

NOTE: Front Runner will not be responsible for any damage caused by the failure to install the product according to these instructions.

Please call us if you have any questions about the installation of this product.

 © 2022 FRONT RUNNER VEHICLE OUTFITTERS

1 GET ORGANIZED

IN THE BOX

1	2 X	Ladder Side
2	6 X	Ladder Rung
3	2 X	Side Bracket RH
4	2 X	Side Bracket LH
5	2 X	Swivel Mount Bracket
6	2 X	Inner Mounting Plate
7	4 X	M6 x 16 Flange Button Head
8	12 X	M6 x 25 Thread Forming Screw
9	12 X	M6 Nyloc Nut
10	4 X	M8 x 16 x 1.6 Flat Washer
11	4 X	M6 x 16 Button Head Screw
12	4 X	M8 x 30 Button Head Screw
13	4 X	M8 Nyloc Nut
14	4 X	Anti Crush Tube
15	4 X	M8 x 100 Hex Head Bolt

IN THE BOX

16	4 X	M8 x 19 x 2 Flat Washer
17	4 X	M6 Jack Nut
18	4 X	M6 x 25 Button Head Bolt
19	1 X	Jack Nut Tool
20	2 X	M6 x 30 Button Head Bolt
21	12 X	M6 Nut Cap

TOOLS NEEDED

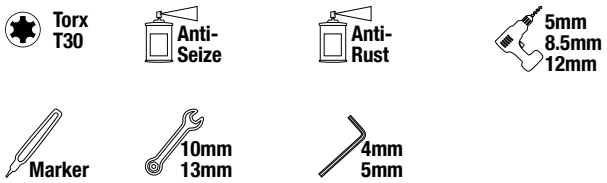

FIGURE 1.1

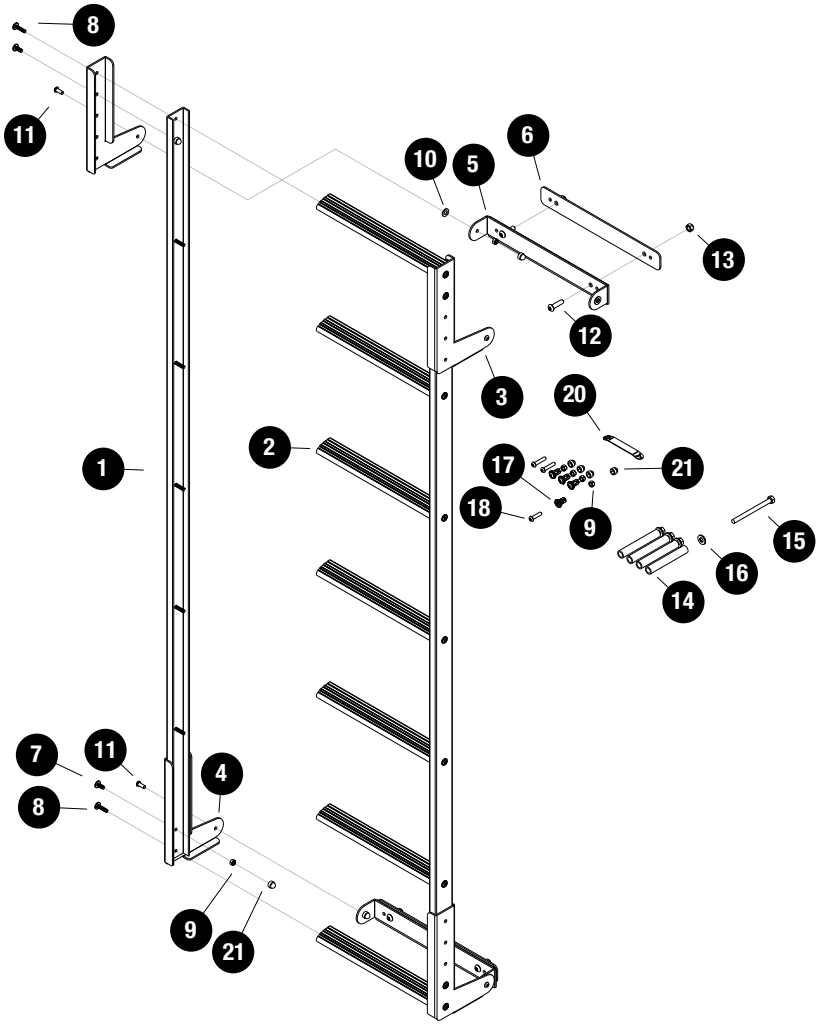

 © 2022 FRONT RUNNER VEHICLE OUTFITTERS

2 FIT AND SECURE

2.1

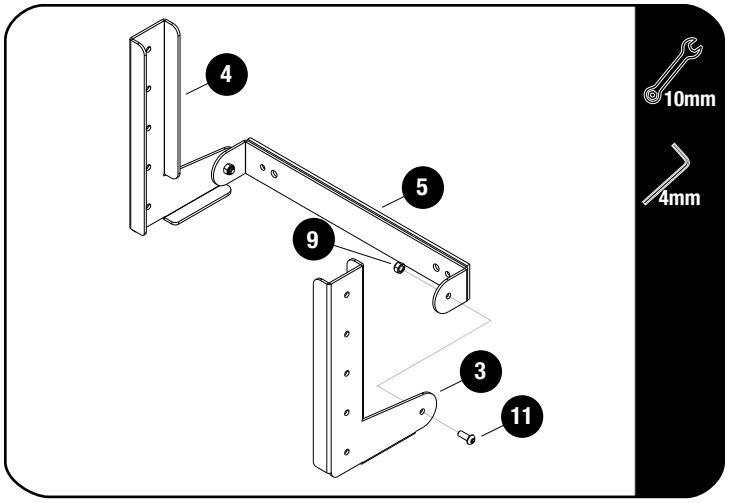

Loosely assemble the LH & RH Side Brackets (Item 3 & 4) to the Swivel Mount Bracket (Item 5) using M6 x 16 Button Head Bolts and M6 Nyloc Nuts (Items 9 & 11) as shown.

2.2

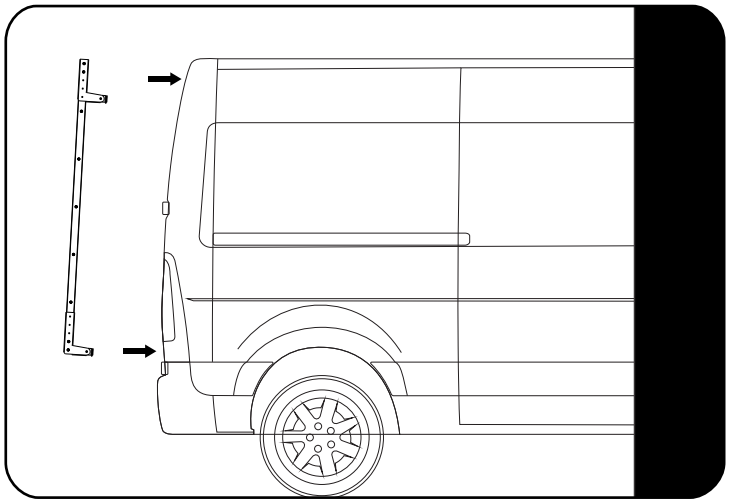

Find suitable rigid mounting points to prevent the door from deforming.

This will help decide the position of (Item 2) in 2.3

Apply a little Anti seize/oil on screw threads before inserting. Note these are thread forming screws. Apply Anti-rust around all holes drilled

2.3

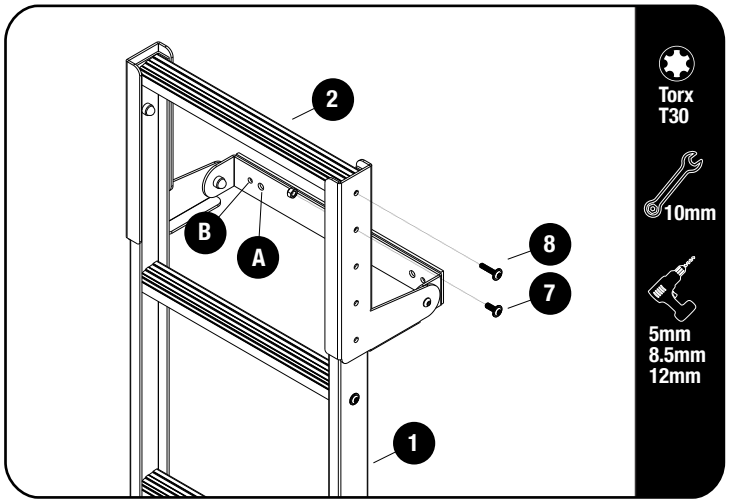

Secure the Rungs (Item 2) to the Ladder Sides (Item 1) to suit the position of the vehicle, using M6 x 25 Thread Forming Screws and M6 x 16 Flange Button Heads (Items 7 & 8). Refer to Fig 1.1.

Place the assembled Ladder against the door and mark the holes to be drilled on the Top and Bottom.

Check that position and the markings are correct before drilling.

Option A: (Recommended)

Drill a 5mm pilot hole and open up to a 8.5mm

Option B:

If there is limited acces (cavity) and it is not possible to drill through the double skinned door an M6 Jack Nuts needs to be used, drill a 5mm Pilot hole and open it up to a 12mm Hole.

© 2022 FRONT RUNNER VEHICLE OUTFITTERS

2 FIT AND SECURE

2.4

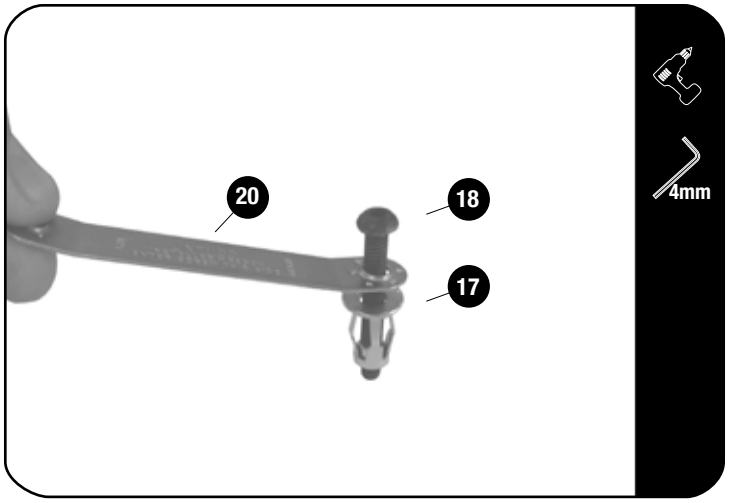

Insert a M6 x 30 Button Head Bolt (Item 18) into the Jack Nut Tool (Item 20) and loosely fit a Jack Nut (Item 17) to the button head bolt as shown.

Using the Jack Nut Tool and a M6 x 30 button head bolt, set the M6 jack nut into both the holes, opened in step 2.2.

Using a cordless driver and a 4mm allen cordless bit, set the jack nut into the hole while holding the Jack Nut Tool, to prevent the Jack Nut from turning.

2.5

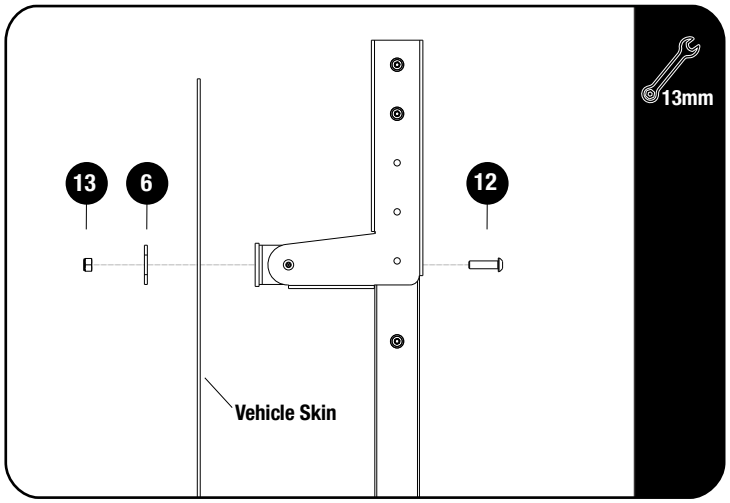

Single Skinned Door: Recommeded

Remove the backing type from the Rubber Strip on the Swivel Mount Bracket (Item 5).

Secure the Ladder to the door using M8 x 30 Button Head Screws, Inner Mounting Plates and M8 Nyloc Nuts (Items 6, 12 & 13).

Fully tighten all fasteners.

Place Nut Caps over all Hex Bolts and Nyloc Nuts (Item 21)

2.6

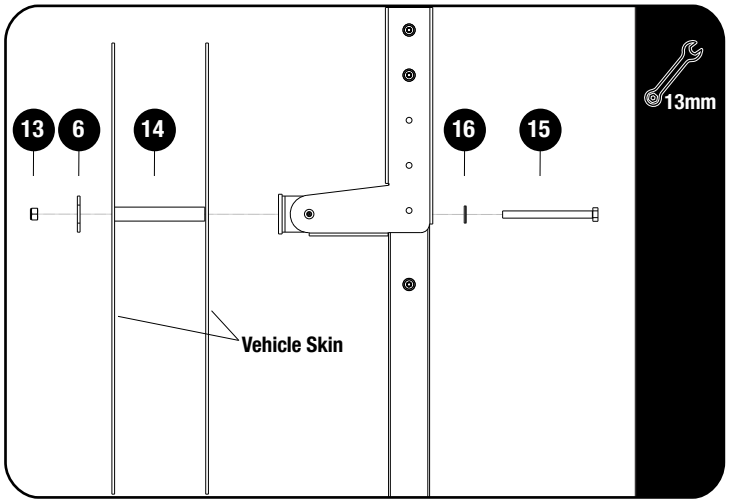

Double Skinned Door: Recommeded

Remove the backing type from the Rubber Strip on the Swivel Mount Bracket (Item 5).

If the door is double skinned open the holes that were drilled in Step 2.2 to 15.5mm.

Trim the Anti Crush Tube (Item 14) to fit snuggly in the door cavity of the double skinned door.

This prevents the door panel from devorming when the bolts are thightened.

Secure the Universal Ladder using M8 x 100 Hex Head Bolts, M8 x 19 x 2 Flat Washers, Anti Crush Tube, Inner Mounting Plates and M8 Nyloc Nuts (Items 6, 13, 14, 15 & 16).

Fully tighten all fasteners.

Place Nut Caps over all Hex Bolts and Nyloc Nuts (Item 21).

© 2022 FRONT RUNNER VEHICLE OUTFITTERS

2 FIT AND SECURE

2.7

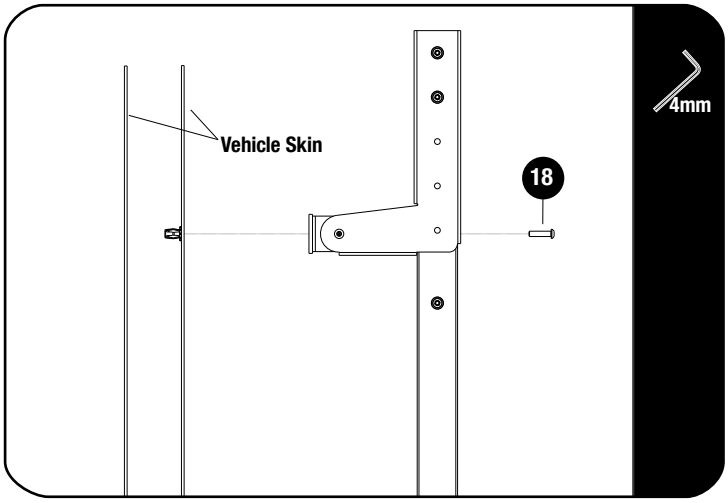

Double Skinned Door With No Access:

Remove the backing type from the Rubber Strip on the Swivel Mount Bracket (Item 5).

Secure the Universal Ladder to the vehicle using M6 x 25 Button Head Bolts (Item 18).

Fully tighten all fasteners.

Place Nut Caps over all Hex Bolts and Nyloc Nuts (Item 21)

3 FINISH

Congratulations! You did it. Take a step back and admire your work!

4 INSTALL OTHER VEHICLE AND RACK ACCESSORIES

Now's the time to visit your favorite Front Runner Dealer in person or online.

Be sure to tag us. We love to see our gear in action! #FrontRunnerOutfitters #BornToRoam

Share your adventures on:

© 2022 FRONT RUNNER VEHICLE OUTFITTERS