START HERE!

READ ME FIRST

Don't be a hero and muscle through this installation without reading these fitting instructions first! Improper installation of this gear may void certain aspects of your warranty.

Before you begin, take a moment and open all your Front Runner Rack Kit boxes and gather the assembly instructions for the various components.

A complete kit will contain:

1. Front Runner Mounting System specific to your vehicle
2. Front Runner Rack Tray or Load Bar Slats

This document will guide you through the assembly of the Mounting System and assist you in fitting the Rack Tray or Load Bars to your specific vehicle.

Please refer to the next page for a list of all the components, quantities and tools required.

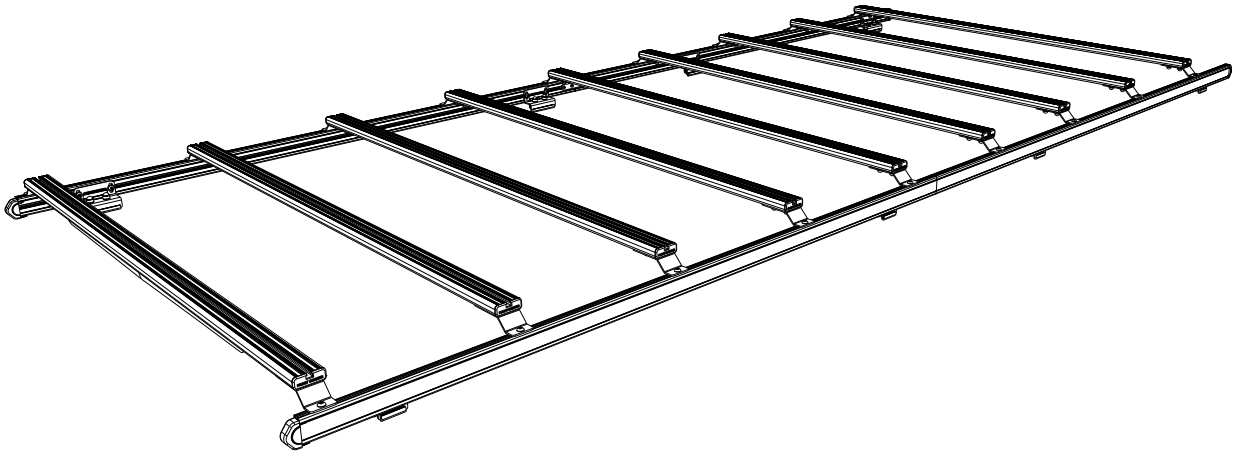

IMPORTANT WARNING! ⚠

IT IS CRITICAL THAT ALL FRONT RUNNER PRODUCTS BE PROPERLY AND SECURELY ASSEMBLED AND ATTACHED TO YOUR VEHICLE. IMPROPER ATTACHMENT COULD RESULT IN AN AUTOMOBILE ACCIDENT, AND COULD CAUSE SERIOUS BODILY INJURY OR DEATH. YOU ARE RESPONSIBLE FOR ASSEMBLING AND SECURING ALL FRONT RUNNER PRODUCTS TO YOUR VEHICLE, CHECKING THE ATTACHMENTS PRIOR TO USE, AND PERIODICALLY INSPECTING THE PRODUCTS FOR ADJUSTMENT, WEAR AND DAMAGE. THEREFORE, YOU MUST READ AND UNDERSTAND ALL OF THE INSTRUCTIONS AND PRECAUTIONS SUPPLIED WITH YOUR FRONT RUNNER PRODUCT PRIOR TO INSTALLATION OR USE. IF YOU DO NOT UNDERSTAND ALL OF THE INSTRUCTIONS AND CAUTIONS, OR IF YOU HAVE NO MECHANICAL EXPERIENCE AND ARE NOT THOROUGHLY FAMILIAR WITH THE INSTALLATION PROCEDURES, YOU SHOULD HAVE THE PRODUCT INSTALLED BY A PROFESSIONAL INSTALLER OR OTHER QUALIFIED PERSONNEL.

NOTE: Front Runner will not be responsible for any damage caused by the failure to install the product according to these instructions.

Please call us if you have any questions about the installation of this product.

 © 2026 FRONT RUNNER VEHICLE OUTFITTERS

1 GET ORGANIZED

IN THE BOX

1	4 X	Side Profile 1762mm
2	10 X	Slat Assembly
3	1 X	Van Rack Wind Deflector
4	1 X	Van Rack Joiner Kit
5	2 X	Van Track End Cap (Pair)
6	4 X	FPCR Foot (Pair)

TOOLS NEEDED

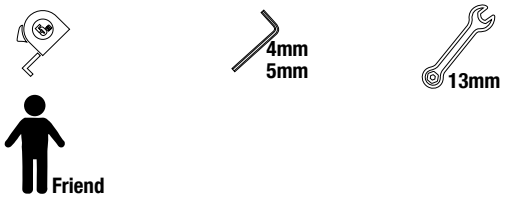

FIGURE 1.1

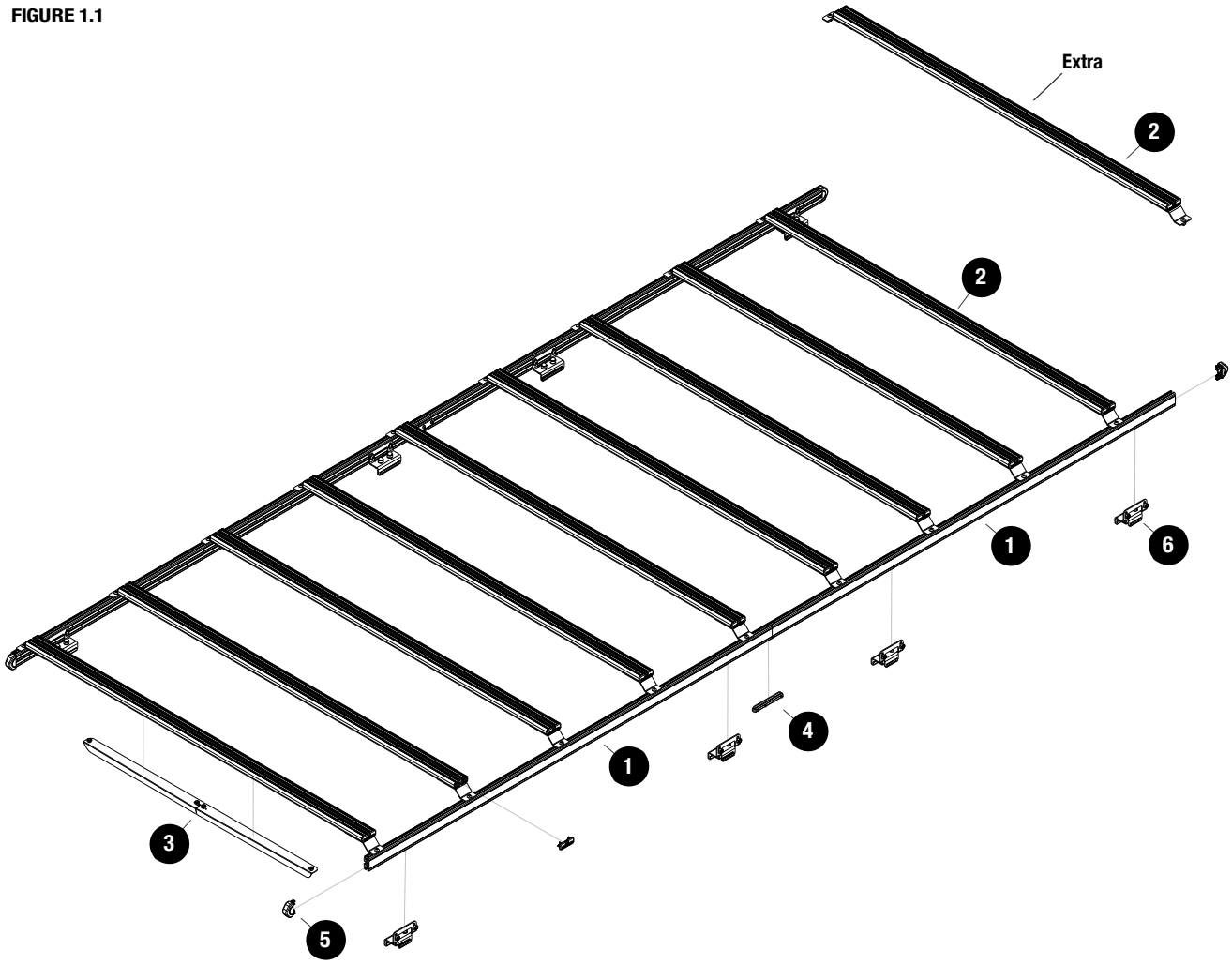

 © 2026 FRONT RUNNER VEHICLE OUTFITTERS

1 GET ORGANIZED

1 SPVT004 - SIDE PROFILE

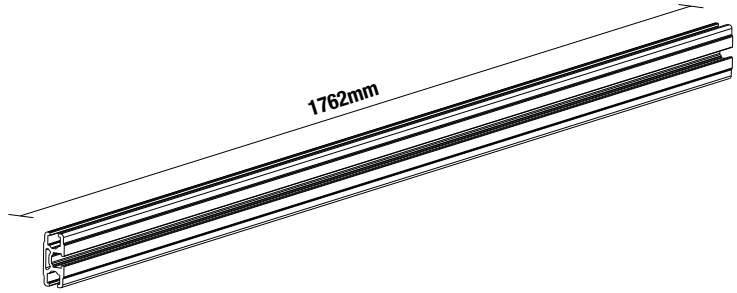

#	QTY	IN THE BOX
1	4 X	Side Profile (1762mm)

2 RRNS1475 (FAVF001 & RRAC209) - SLAT ASSEMBLY

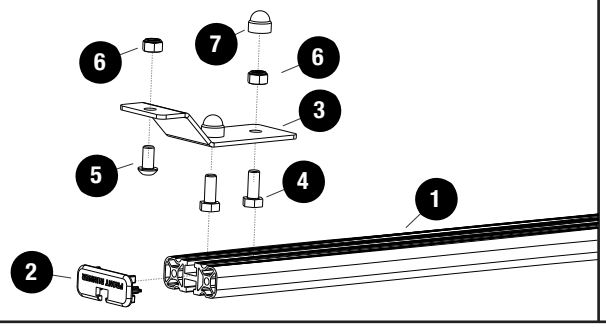

#	QTY	IN THE BOX
1	10 X	Narrow Slat
2	20 X	Narrow Slat End Cap
3	20 X	Slat Z Bracket
4	40 X	M8 x 20 Hex Head Bolt
5	20 X	M8 x 16 Button Head Bolt
6	60 X	M8 Nyloc Nut
7	40 X	M8 Nut Cap

3 WDST013 - VAN RACK WIND DEFLECTOR

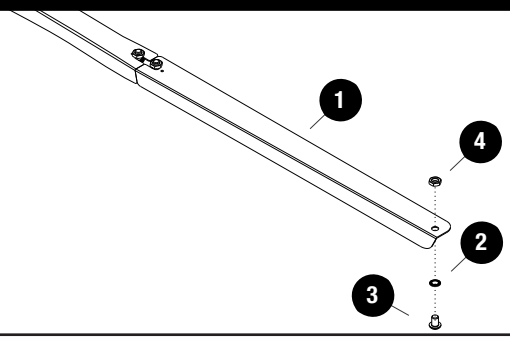

#	QTY	IN THE BOX
1	2 X	Wind Deflector (1LH & 1 RH)
2	4 X	Schnorr Washer
3	4 X	M8 x 12 Button Head Bolt
4	4 X	M8 Thin Nut

© 2026 FRONT RUNNER VEHICLE OUTFITTERS

1 GET ORGANIZED

4 RRAC207 - VAN RACK JOINER KIT

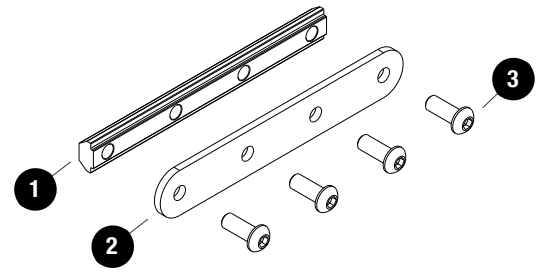

#	QTY	IN THE BOX
1	2 X	SPVT Joiner Bar
2	2 X	Joiner Plate
3	8 X	M6 x 16 Button Head Bolt

5 RRAC208 - VAN TRACK END CAP

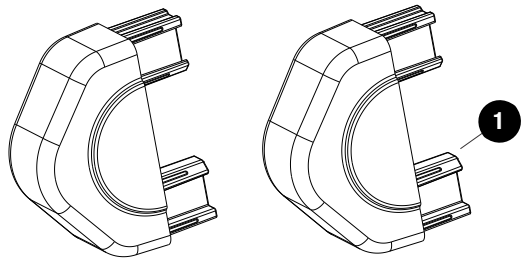

#	QTY	IN THE BOX
1	4 X	End Cap

6 FAVF002 - FPCR FOOT (PAIR)

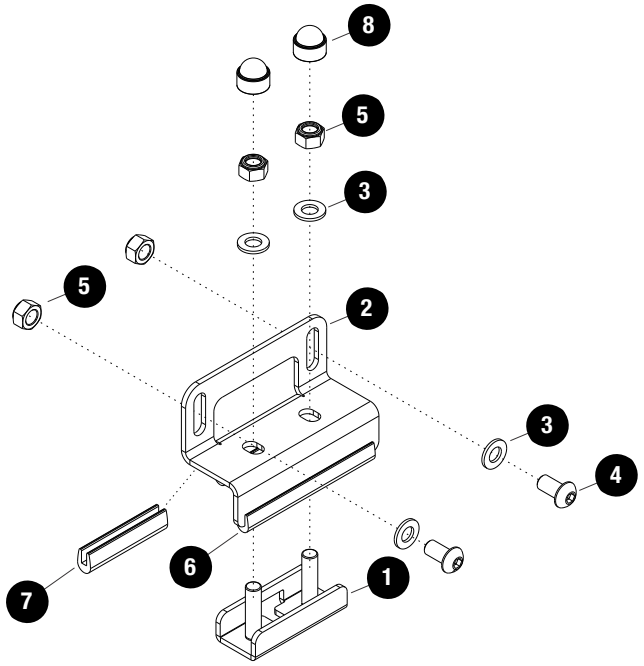

#	QTY	IN THE BOX
1	8 X	Inner Foot Plate
2	8 X	Foot
3	32 X	M8 x 16 x 1.6 Flat Washer
4	16 X	M8 x 16 Button Head Bolt
5	32 X	M8 Nyloc Nut
6	8 X	Rubber U (90mm Long)
7	8 X	Rubber U (50mm Long)
8	32 X	M8 Nut Cap

© 2026 FRONT RUNNER VEHICLE OUTFITTERS

2 PLUG REMOVAL

2.1

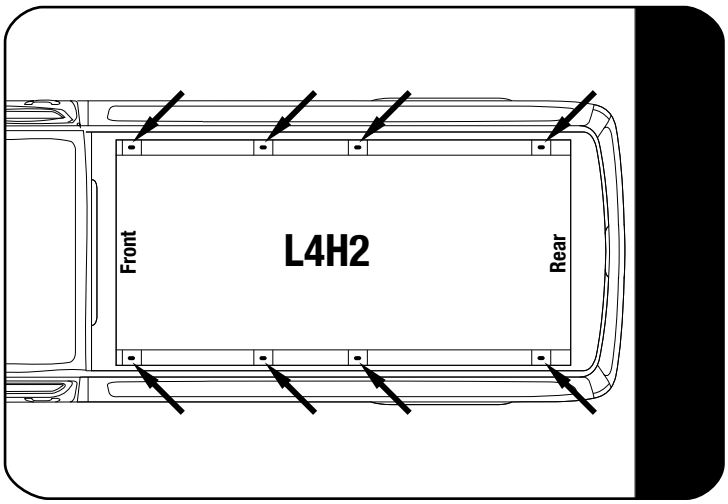

Locate the factory mounting fixtures on the vehicle's roof.

2.2

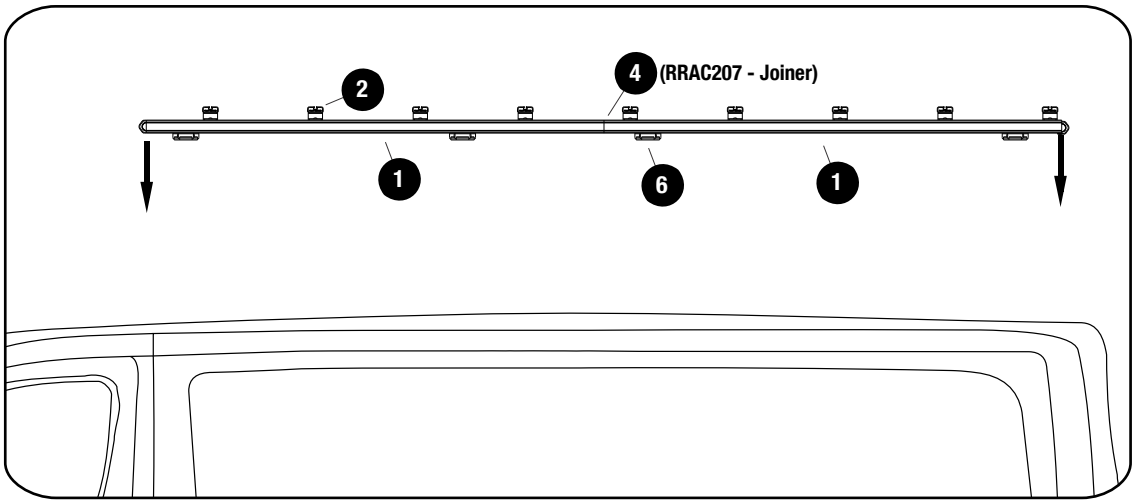

2.3

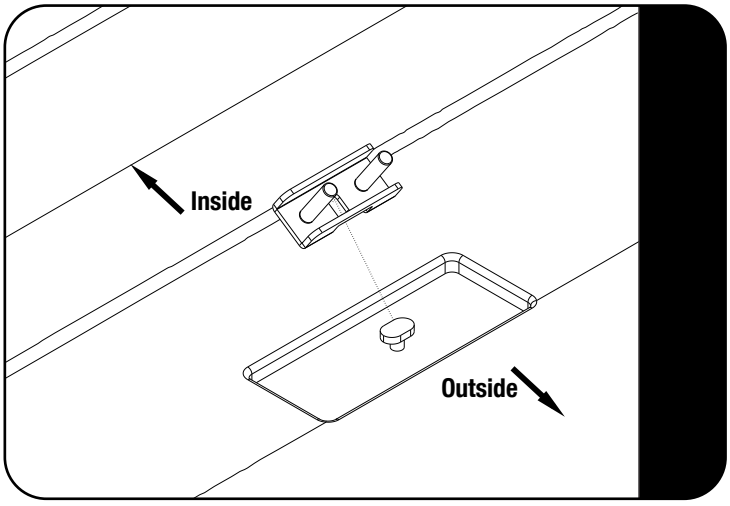

Slide the Inner Foot Plate under the factory mounting fixture as shown.

Make sure that the the bracket is straight and seated against the factory mounting fixture.

Refer to Item 6 on page 4 for assembly.

 © 2026 FRONT RUNNER VEHICLE OUTFITTERS

3 SIDE PROFILE ASSEMBLY

3.1

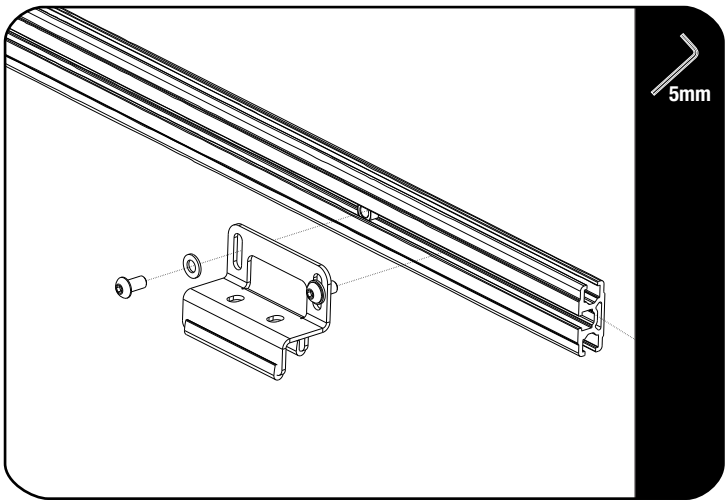

Loosely assemble the FPCR Feet (Item 7) using M8 x 16 Button Head Bolts, M8 Flat Washers and M8 Nyloc Nuts and slide them into the side profiles. They must still be able to slide freely.

Refer to Item 6 on page 4 for assembly.

See 2.2 for positioning around Joiners

3.2

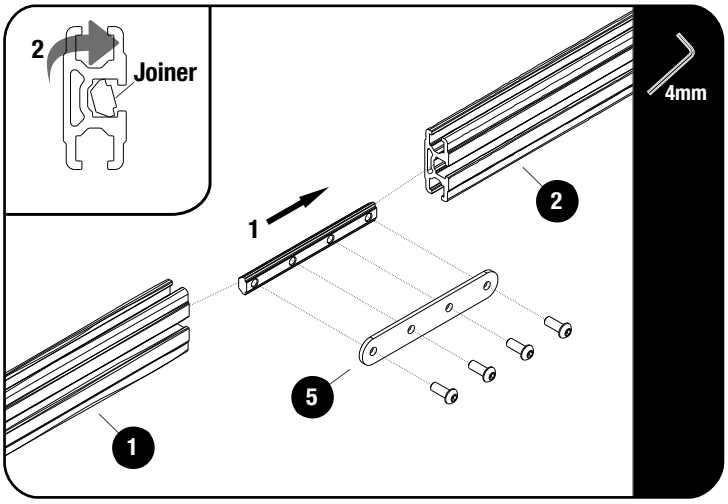

Place Joiner into the Side Profile and twist into position as shown.

Refer to Item 5 on Page 4.

Assemble the Side Profiles (Item 1) using the Rack Joiners (Item 4) and M6 x 16 Button Head Bolts and fully tighten.

See 2.2 for Side Profile orientation.

Tightening Torque 16Nm / 11.8 ft lbs

3.3

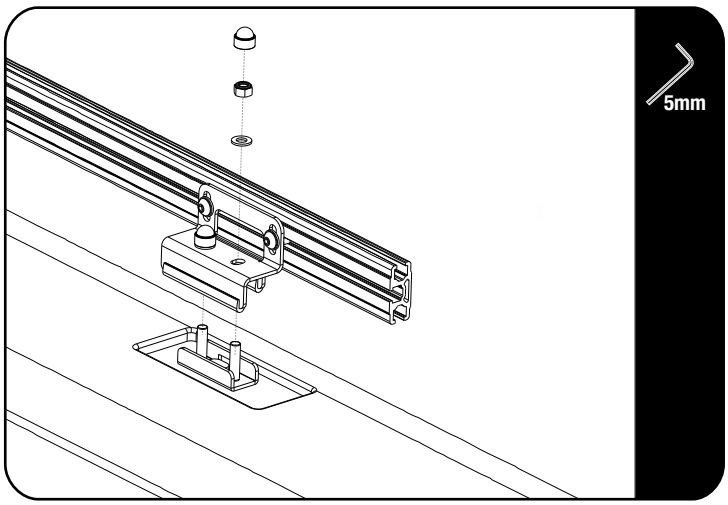

Ensure Rubber Trim is fitted to both sides of the foot.

Place pre-assembled Side Profiles over the Inner Foot Brackets. Secure the feet to the roof using the Inner Foot Bracket, M8 x 16 Flat Washers, and M8 Nyloc Nuts. You will need a friend to help. Fully tighten.

Refer to Item 6 on page 4.

Tightening Torque 15Nm / 11.1 ft lbs

© 2026 FRONT RUNNER VEHICLE OUTFITTERS

4 WIND DEFLECTOR ASSEMBLY

4.1

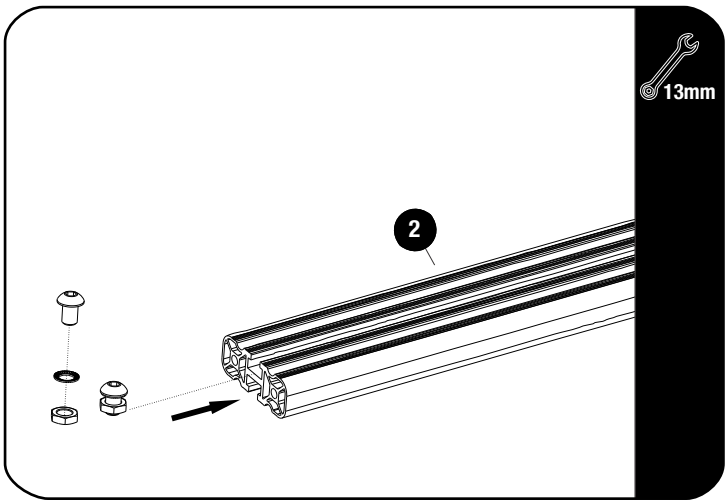

Insert two Button Head Bolts, M8 Half Nuts and M8 Schnorr Washers assemblies into the Narrow Slat as shown. Slide them to the center of the Narrow Slat (Item 2), making sure that the Schnorr Washer is above the T-Slot Channel.

Refer to Item 3 on page 3.

4.2

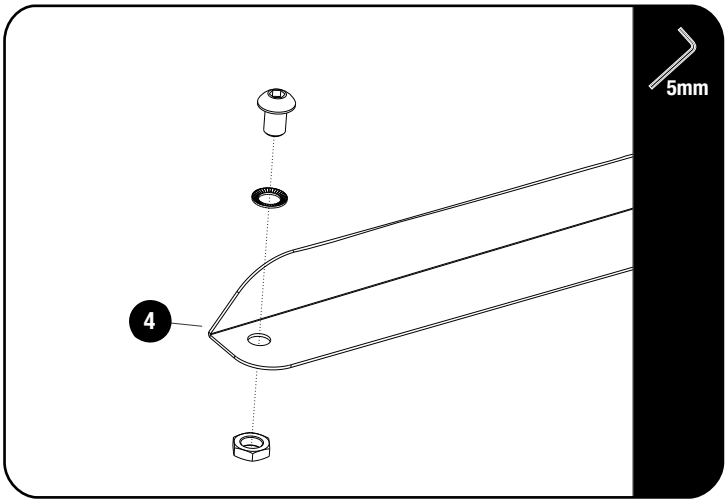

Loosely assemble the M8 x 12 Button Head Bolt, M8 Schnorr Washers and M8 Thin Nut both LH & RH Wind Deflectors (Item 4) as shown.

Refer to Item 3 on page 3.

4.3

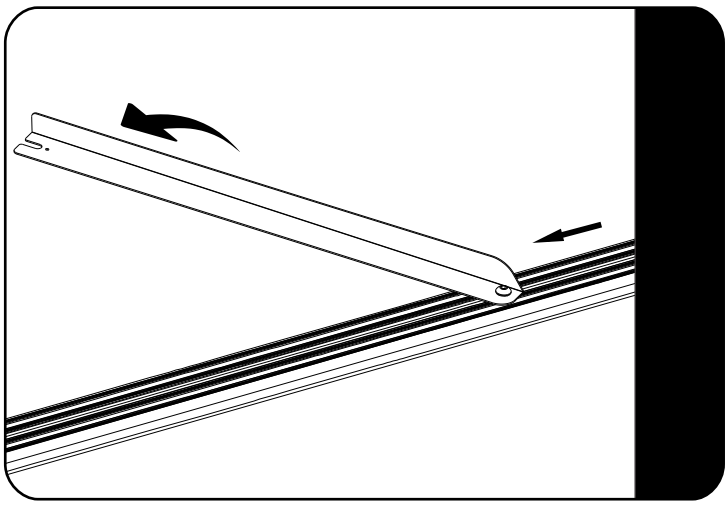

Slide the nut assembled to the Wind Deflector into the T-slot of the Narrow Slat as shown.

Refer to Item 3 on page 3.

 © 2026 FRONT RUNNER VEHICLE OUTFITTERS

4 WIND DEFLECTOR FIT & SECURE

4.4

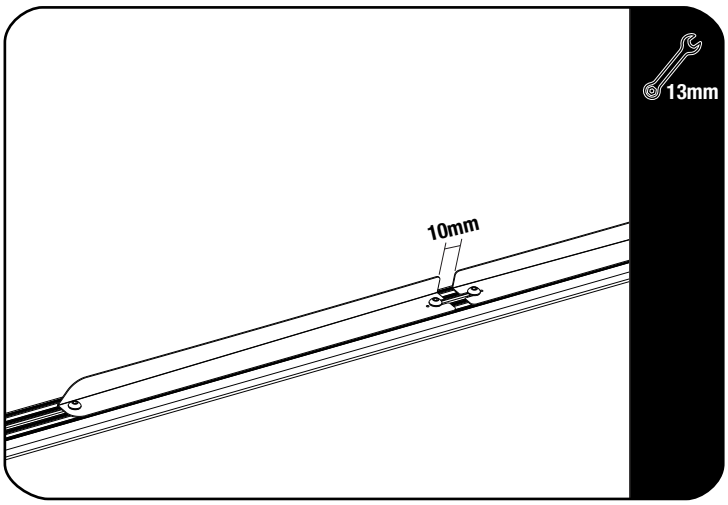

Center the Wind Deflector on the rack and move the bolt assemblies from fig 4.1 into the slots as shown in fig 4.4.

Leave a 10mm gap between the LH and RH Wind Deflectors and fully tighten.

Refer to Item 3 on page 3.

Tightening Torque 20Nm / 14.75 ft lbs

5 NARROW SLAT ASSEMBLY

5.1

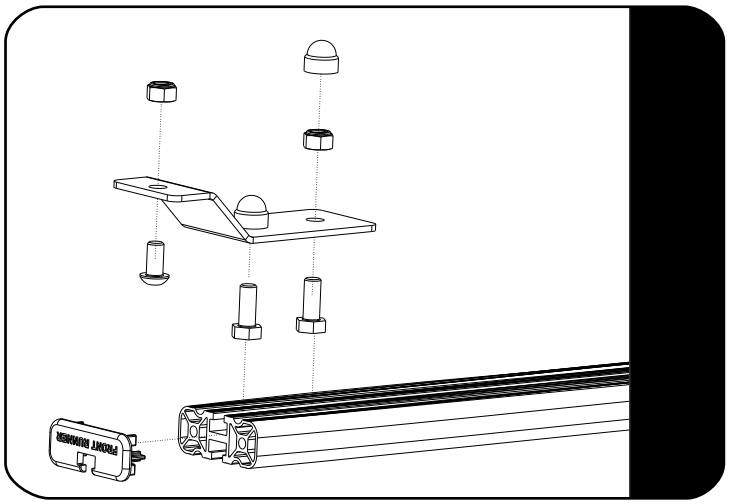

Loosely assemble the Slat Z Brackets (Item 2) to the Narrow Slats using M8 x 20 Hex Bolts and M8 Nyloc Nuts.

Place the Narrow Slat End Caps on the slats (Item 2). See orientation in 5.1.

Refer to Item 2 on page 3.

 © 2026 FRONT RUNNER VEHICLE OUTFITTERS

5 NARROW SLAT FIT & SECURE

5.2

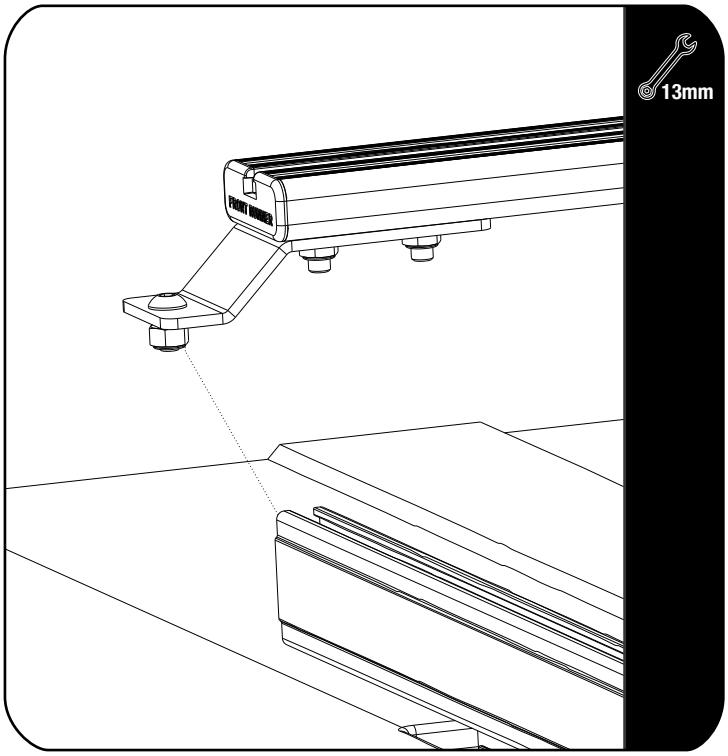

Slide pre-assembled Slats into the Side Profiles as shown. Space the Slats at 404mm increments, or at your chosen spacing. These can be adjusted at any stage.

Additional Slats can be added (RRNS1475 sold seperately).

Refer to Item 2 on page 3.

5.3

 © 2026 FRONT RUNNER VEHICLE OUTFITTERS

5 NARROW SLAT FIT & SECURE

5.4

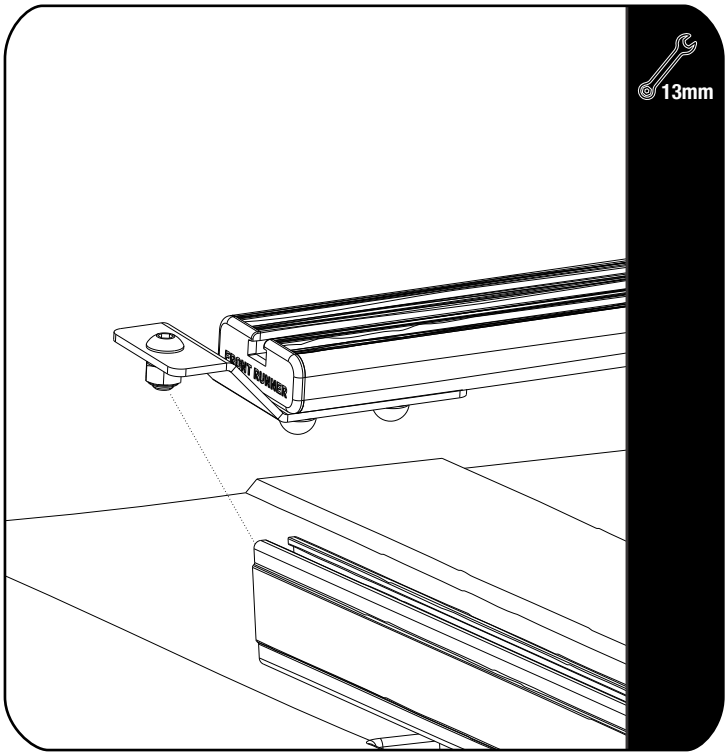

The Slat Z brackets (Item 2) can be inverted as shown if you wish to have the rack lower on your vehicle.

5.5

 © 2026 FRONT RUNNER VEHICLE OUTFITTERS

5 NARROW SLAT FIT & SECURE

5.6

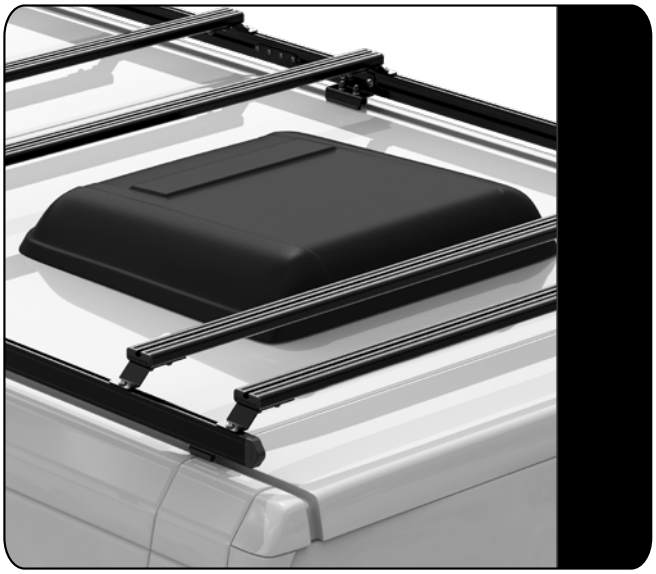

If a roof A/C is fitted to the vehicle, space the slats around the A/C at 202mm increments on shorter lengths and 404mm on the longer lengths

The slats can be positioned in front and behind the A/C unit.

Fully tighten all fasteners.

Tightening Torque 20Nm / 14.75 ft lbs

Place Nut Caps over all Hex Bolts and Nyloc Nuts.

6 COMPLETION

6.1 Congratulations! You did it. Take a step back and admire your work!

7 INSTALL OTHER VEHICLE AND RACK ACCESSORIES

Now's the time to visit your favorite Front Runner dealer in person or online.

IMPORTANT!

FRONT RUNNER RACK KITS OFTEN HAVE A HIGHER LOAD RATING THAN THE VEHICLES THEY ARE MOUNTED TO. PLEASE REFER TO YOUR SPECIFIC VEHICLE MANUFACTURER FOR A RECOMMENDED ROOF RATING. FRONT RUNNER CANNOT BE RESPONSIBLE FOR IMPROPER LOADING BEYOND THE VEHICLE MANUFACTURER'S STATED LOAD CAPACITY.

Be sure to tag us. We love to see our gear in action! #FrontRunnerOutfitters #BornToRoam

Share your adventures on:

© 2026 FRONT RUNNER VEHICLE OUTFITTERS