START HERE!

READ ME FIRST

Don't be a hero and muscle through this installation without reading these fitting instructions first! Improper installation of this gear may void certain aspects of your warranty.

Before you begin, take a moment and open all your Front Runner rack kit boxes and gather the assembly instructions for the various components.

A complete kit will contain:

1. A Front Runner Mounting System specific to your vehicle
2. A Front Runner Rack Tray or Load Bar Slats

This document will guide you through the assembly of the mounting system and assist you in fitting the roof rack tray or load bars to your specific vehicle.

Please refer to the next page for a list of all the components, quantities and tools required.

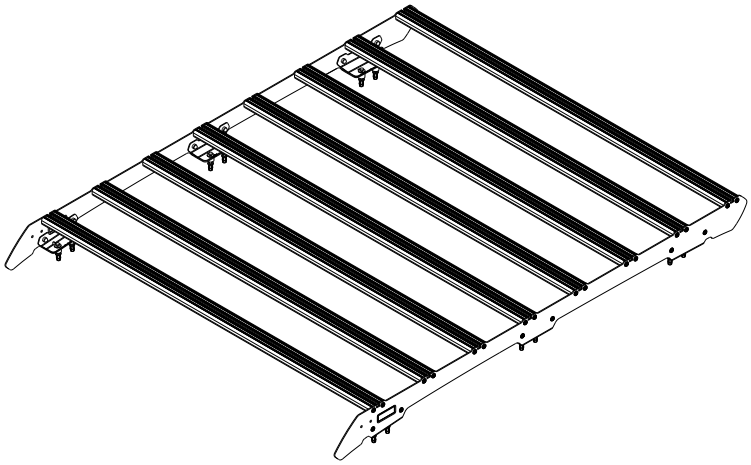

IMPORTANT WARNING! ⚠

IT IS CRITICAL THAT ALL FRONT RUNNER PRODUCTS BE PROPERLY AND SECURELY ASSEMBLED AND ATTACHED TO YOUR VEHICLE. IMPROPER ATTACHMENT COULD RESULT IN AN AUTOMOBILE ACCIDENT, AND COULD CAUSE SERIOUS BODILY INJURY OR DEATH. YOU ARE RESPONSIBLE FOR ASSEMBLING AND SECURING ALL FRONT RUNNER PRODUCTS TO YOUR VEHICLE, CHECKING THE ATTACHMENTS PRIOR TO USE, AND PERIODICALLY INSPECTING THE PRODUCTS FOR ADJUSTMENT, WEAR AND DAMAGE. THEREFORE, YOU MUST READ AND UNDERSTAND ALL OF THE INSTRUCTIONS AND PRECAUTIONS SUPPLIED WITH YOUR FRONT RUNNER PRODUCT PRIOR TO INSTALLATION OR USE. IF YOU DO NOT UNDERSTAND ALL OF THE INSTRUCTIONS AND CAUTIONS, OR IF YOU HAVE NO MECHANICAL EXPERIENCE AND ARE NOT THOROUGHLY FAMILIAR WITH THE INSTALLATION PROCEDURES, YOU SHOULD HAVE THE PRODUCT INSTALLED BY A PROFESSIONAL INSTALLER OR OTHER QUALIFIED PERSONNEL.

NOTE: Front Runner will not be responsible for any damage caused by the failure to install the product according to these instructions.

Please call us if you have any questions about the installation of this product.

 © 2023 FRONT RUNNER VEHICLE OUTFITTERS

1 GET ORGANIZED

IN THE BOX

1	8 X	Slim Sport Slats
2	2 X	Footrail 1 LH / 1 RH
3	2 X	Front Foot Support 1 LH / 1 RH
4	2 X	Center Foot Support 1 LH / 1 RH
5	2 X	Rear Foot Support 1 LH / 1 RH
6	12 X	M6 x 16 Button Head Flange
7	32 X	M6 x 25 Thread Forming Screws
8	12 X	M6 Nyloc Nuts
9	24 X	M6 Plastic Nut Cap
10	12 X	M6 x 19 x 1 Flat Washer
11	12 X	M6 x 40 Hex Head Bolt
12	13 X	Long Jack Nuts
13	8 X	19 x 12.5 x 15 Spacer
14	4 X	19 x 12.5 x 12 Spacer
15	2 X	M6 x 35 Button Head Screw
16	1 X	Jack Nut Tool

TOOLS NEEDED

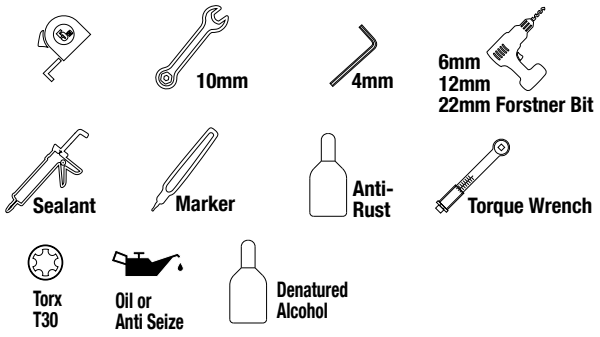

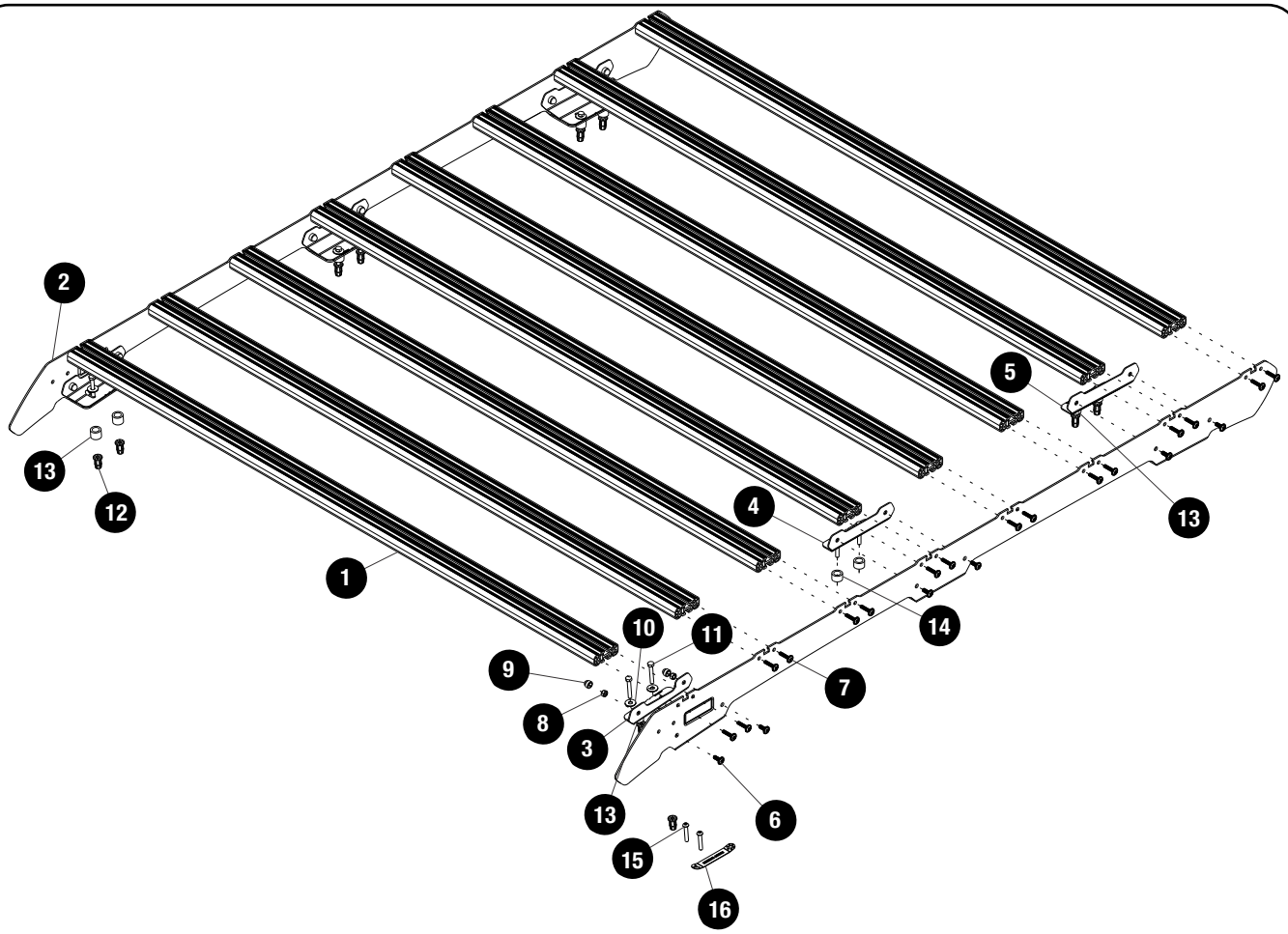

 © 2023 FRONT RUNNER VEHICLE OUTFITTERS

2 FIT AND SECURE

2.1

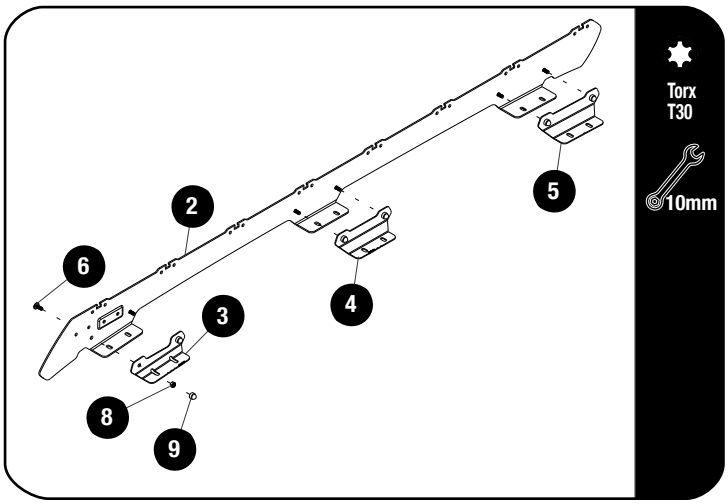

Secure the stiffener plates (Items 3, 4 & 5) to the Foot Rails (Item 2), using M6 x 16 Flange Button Head Screws & M6 Nyloc Nuts (Items 6 & 8). Fully tighten.

Do this with both the LH & RH Foot Rails.

Place M6 Nut Caps (Item 9) over all Nyloc Nuts.

Tightening Torque 9 - 11 Nm / 6.6 - 8.1 ft lb

2.2

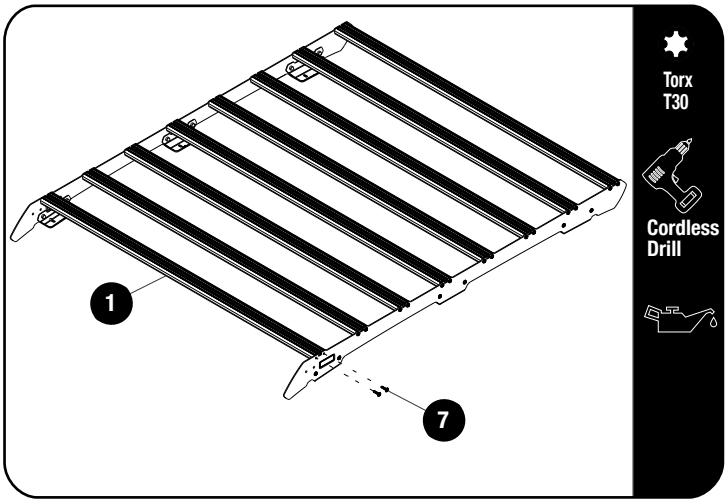

Use a little anti seize or oil on screw threads before inserting. Note these are Thread Forming Screws.

Assemble seven Slim Sport Slats (Item 1) to assembly 2.3 using M6 x 25 Thread Forming Screws (Item 7).

Tightening Torque 8-10Nm / 5.9 ft lb - 7.38 ft lb. Take care when using a cordless driver.

2.3

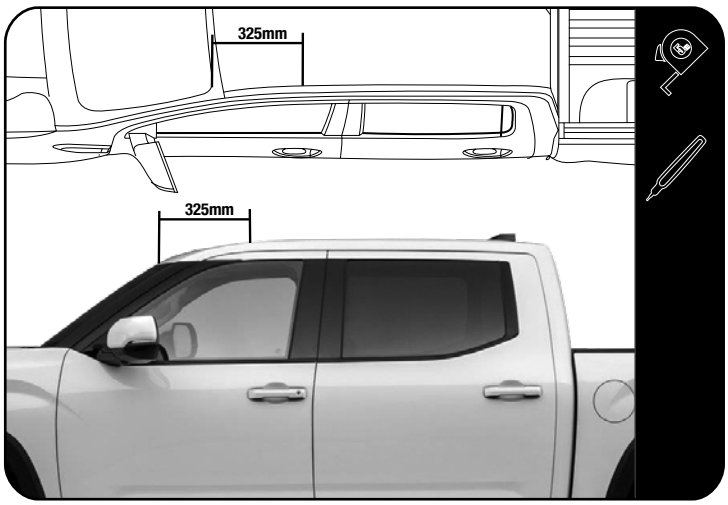

Measure 325mm backward from the top edge of the winscreen and make a mark, do this on both the LH / RH ditch.

Ask a friend to help place the assembled sports rack on the roof positioning the first hole in the foot rail with the center mark made earlier on the ditch and mark the 5 remaining holes per footrail.

© 2023 FRONT RUNNER VEHICLE OUTFITTERS

2 FIT AND SECURE

2.4

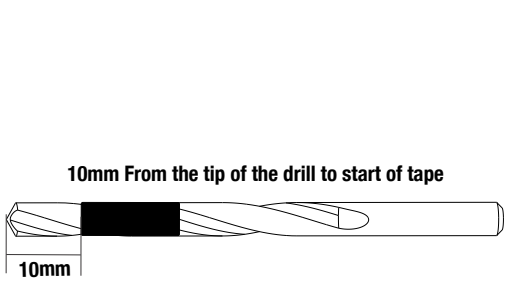

6mm
12mm
22mm
Forstner

Anti-Rust

TIP:
Place tape around the drill to mark a depth of 10mm, take care as there are airbags and canisters below.

Remove the assembled sports rack and drill the holes you marked, starting with a 22mm Forstner bit to drill a pilot hole and remove the mastic for the tube spacer, then drill a 6mm pilot hole before opening to a 12mm hole. There is no need for a lot of downward pressure. Let the drill do the work.

TAKE CARE NOT TO DRILL TO DEEP AS THE CURTAIN AIRBAG IS BELOW, USING A DRILL STOP IS ADVISED.

Clean the area around the holes drilled using a rag and denatured alcohol. Apply anti-rust around all the holes.

2.5

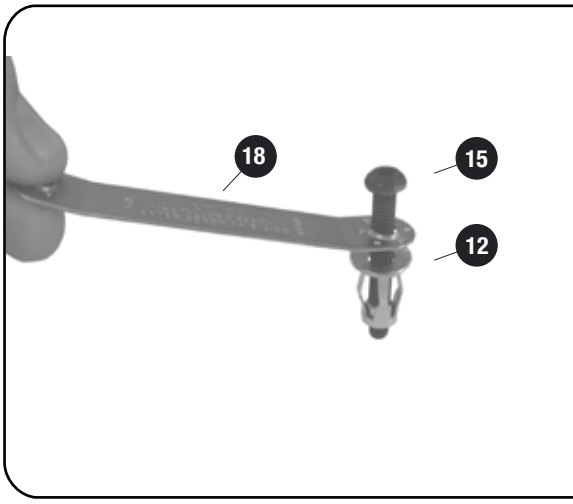

4mm

Insert a M6 x 30 Button Head Bolt (Item 15) into the Jack Nut Tool (Item 18) and loosely fit a Jack Nut (Item 12) to the button head bolt as shown.

Using a cordless driver and a 4mm allen cordless bit, set the jack nut into the holes from step 2.2 while holding the Jack Nut Tool, to prevent the Jack Nut from turning.

2.6

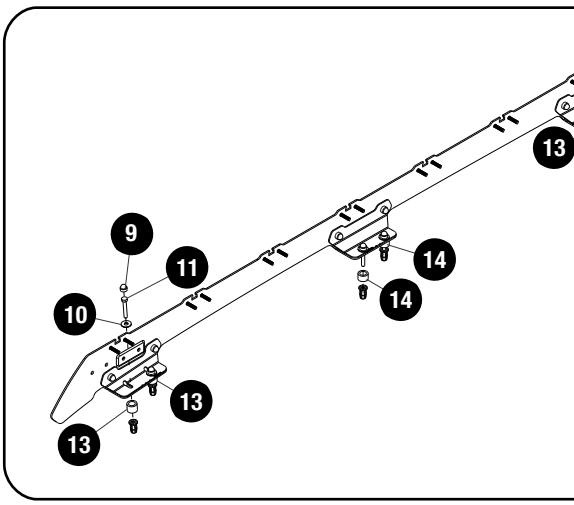

Sealant

10mm

Place the tube spacers (Item 13 & 14) into the mastic of all holes drilled, 2 x 15mm spacers in the front holes 2 x 12mm spacers in the middle holes and 2 x 15mm spacers in the rear holes. Fill the tube spacers with silicone sealant.

Place the sport rack on the roof over the holes / spacers.

Loosely assemble the sport rack to the roof using M6 x 40 Hex Bolts and M6 x 19 x 1 Flat Washers (Items 10 & 11).

Check if the rack is centered and fully tighten all fastners.

Place M6 Nut Caps (Item 9) over all hex bolts to finish off the nuts.

© 2023 FRONT RUNNER VEHICLE OUTFITTERS

4 COMPLETION

4.1 Congratulations! You did it. Take a step back and admire your work!

5 INSTALL OTHER VEHICLE AND RACK ACCESSORIES

Now's the time to visit your favorite Front Runner dealer in person or online.

IMPORTANT!

FRONT RUNNER RACK KITS OFTEN HAVE A HIGHER LOAD RATING THAN THE VEHICLES THEY ARE MOUNTED TO. PLEASE REFER TO YOUR SPECIFIC VEHICLE MANUFACTURER FOR A RECOMMENDED ROOF RATING. FRONT RUNNER CANNOT BE RESPONSIBLE FOR IMPROPER LOADING BEYOND THE VEHICLE MANUFACTURER'S STATED LOAD CAPACITY.

Be sure to tag us. We love to see our gear in action! #FrontRunnerOutfitters #BornToRoam

Share your adventures on:

© 2023 FRONT RUNNER VEHICLE OUTFITTERS