START HERE!

READ ME FIRST

Don't be a hero and muscle through this installation without reading these fitting instructions first! Improper installation of this gear may void certain aspects of your warranty.

Before you begin, take a moment and open all your Front Runner rack kit boxes and gather the assembly instructions for the various components.

A complete kit will contain:

1. A Front Runner Slimsport kit.

This document will guide you through the assembly of the mounting system and assist you in fitting the roof rack tray or load bars to your specific vehicle.

Please refer to the next page for a list of all the components, quantities and tools required.

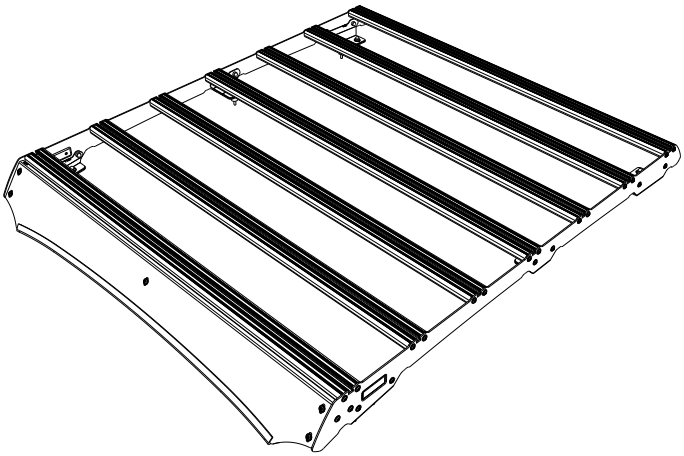

IMPORTANT WARNING! ⚠

IT IS CRITICAL THAT ALL FRONT RUNNER PRODUCTS BE PROPERLY AND SECURELY ASSEMBLED AND ATTACHED TO YOUR VEHICLE. IMPROPER ATTACHMENT COULD RESULT IN AN AUTOMOBILE ACCIDENT, AND COULD CAUSE SERIOUS BODILY INJURY OR DEATH. YOU ARE RESPONSIBLE FOR ASSEMBLING AND SECURING ALL FRONT RUNNER PRODUCTS TO YOUR VEHICLE, CHECKING THE ATTACHMENTS PRIOR TO USE, AND PERIODICALLY INSPECTING THE PRODUCTS FOR ADJUSTMENT, WEAR AND DAMAGE. THEREFORE, YOU MUST READ AND UNDERSTAND ALL OF THE INSTRUCTIONS AND PRECAUTIONS SUPPLIED WITH YOUR FRONT RUNNER PRODUCT PRIOR TO INSTALLATION OR USE. IF YOU DO NOT UNDERSTAND ALL OF THE INSTRUCTIONS AND CAUTIONS, OR IF YOU HAVE NO MECHANICAL EXPERIENCE AND ARE NOT THOROUGHLY FAMILIAR WITH THE INSTALLATION PROCEDURES, YOU SHOULD HAVE THE PRODUCT INSTALLED BY A PROFESSIONAL INSTALLER OR OTHER QUALIFIED PERSONNEL.

NOTE: Front Runner will not be responsible for any damage caused by the failure to install the product according to these instructions.

Please call us if you have any questions about the installation of this product.

© 2024 FRONT RUNNER VEHICLE OUTFITTERS

1 GET ORGANIZED

IN THE BOX

1	2 X	Foot Rail 1LH + 1RH
2	7 X	Slimsport Slat
3	2 X	Stiffener Plate 01
4	2 X	Stiffener Plate 02
5	2 X	Stiffener Plate 03
6	28 X	M6x25 Thread Forming Screw
7	12 X	M6x16 Flange Button Head
8	4 X	Spacer 19 x 12.5 x 24
9	6 X	Spacer 19 x 12.5 x 20
10	10 X	M6x19x1 Flat Washer
11	10 X	M6 Spring Washer
12	10 X	M6x45 Hex Bolt
13	22 X	M6 Nut Cap
14	12 X	M6 Nyloc Nut

TOOLS NEEDED

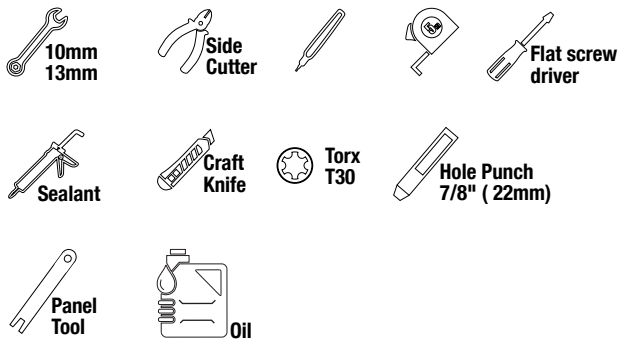

FIGURE 1.1

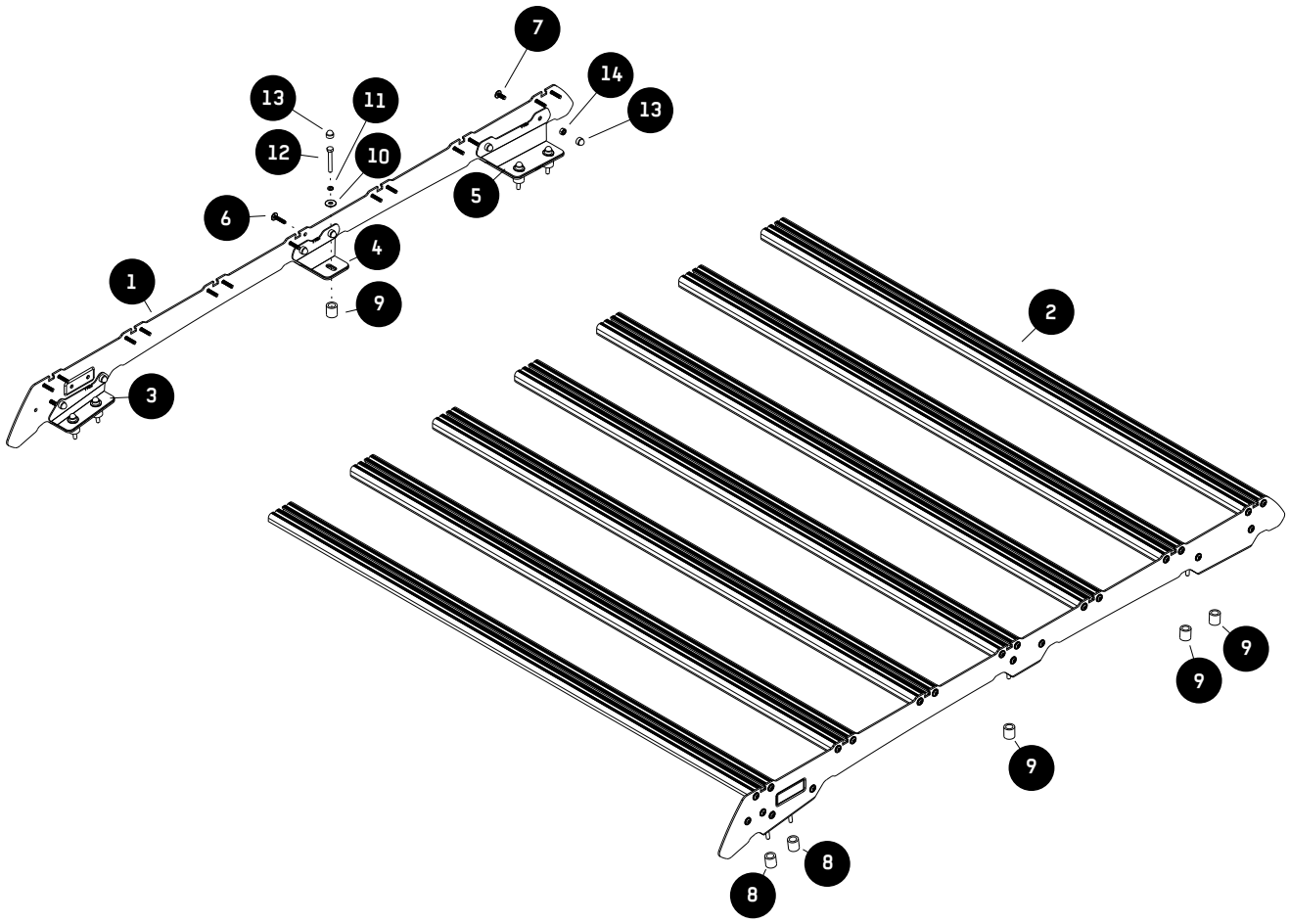

 © 2024 FRONT RUNNER VEHICLE OUTFITTERS

2 FIT AND SECURE

2.1

Using a panel tool or flat screw driver start from the front of the vehicle, lift and remove the two ditch moldings running along either side of the roof.

Remove the tape covering the ten mounting points in the ditch (five per side).

Starting at the front of the ditch molding measure and mark the following distances.

- 200mm

- 255mm

- 820mm

- 1270mm

- 1343mm.

Repeat this process on both the LH / RH ditch moldings.

2.2

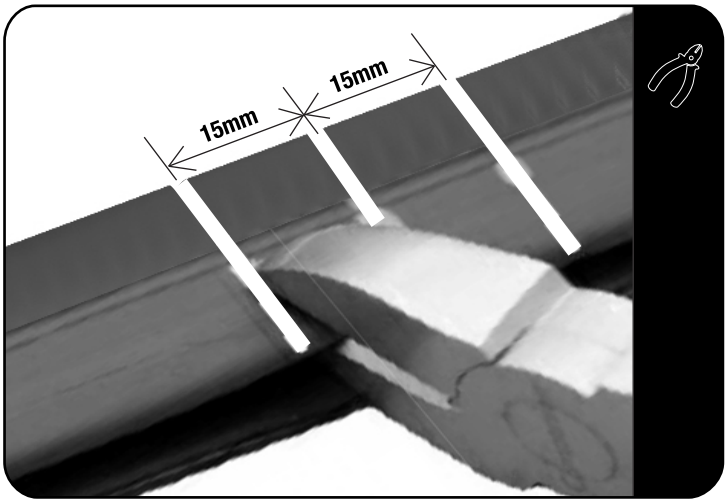

Working on the underside of the ditch molding, measure and mark a line 15mm either side of your original markings from Step 2.1 as shown in Step 2.2.

Using a pair of side cutters and a utility knife, remove the marked section of the ditch molding as shown in Step 2.2 through to Step 2.4.

2.3

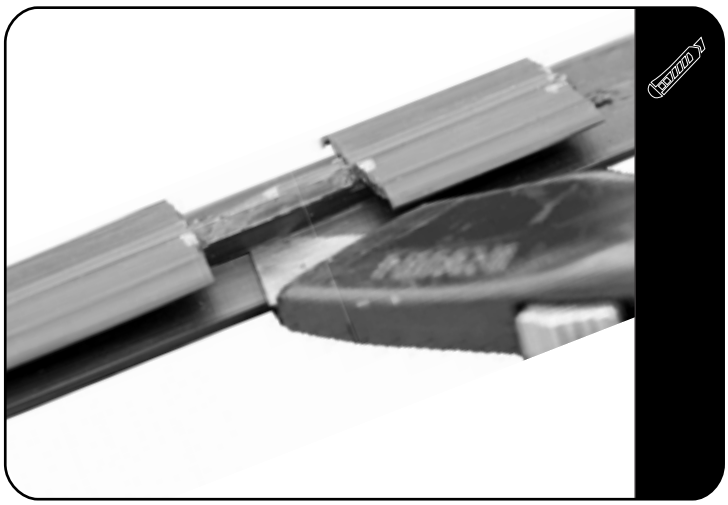

Refer to Step 2.2.

 © 2024 FRONT RUNNER VEHICLE OUTFITTERS

2 FIT AND SECURE

2.4

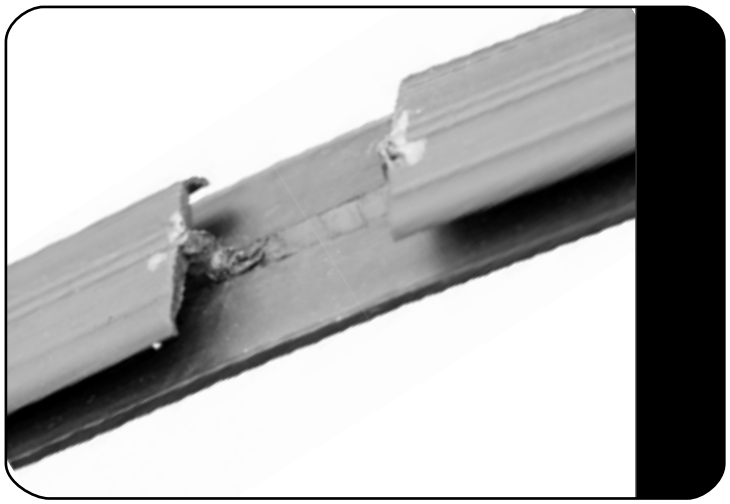

Refer to Step 2.2.

2.5

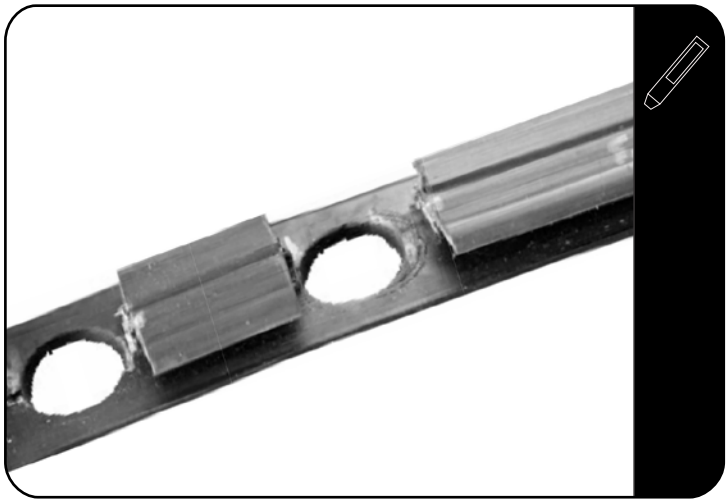

Using a 7/8" (22mm) hole punch, punch holes through the ditch molding centered on each of your markings.

2.6

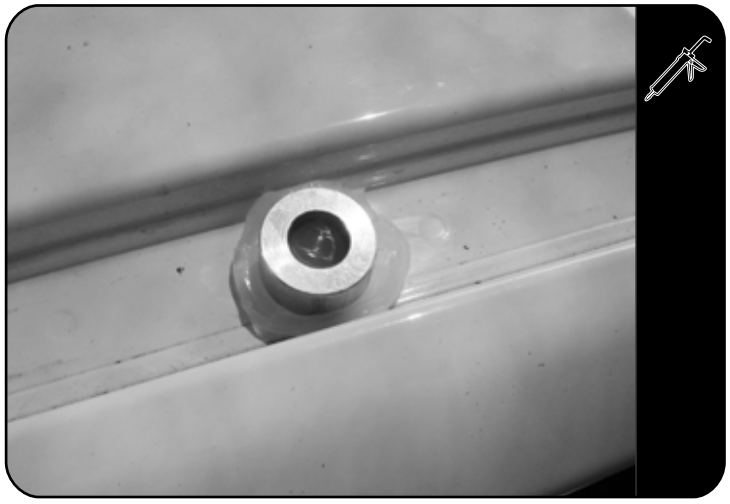

Clear the area around each mounting point in the ditch using a rag and denatured alcohol.

Refit the ditch mould.

Place a small amount of silicone over each mounting point, followed by the aluminium spacers as shown in Fig 1.1.

Note that the spacers are different sizes and need to be mounted according to Fig 1.1.

© 2024 FRONT RUNNER VEHICLE OUTFITTERS

2 FIT AND SECURE

2.7

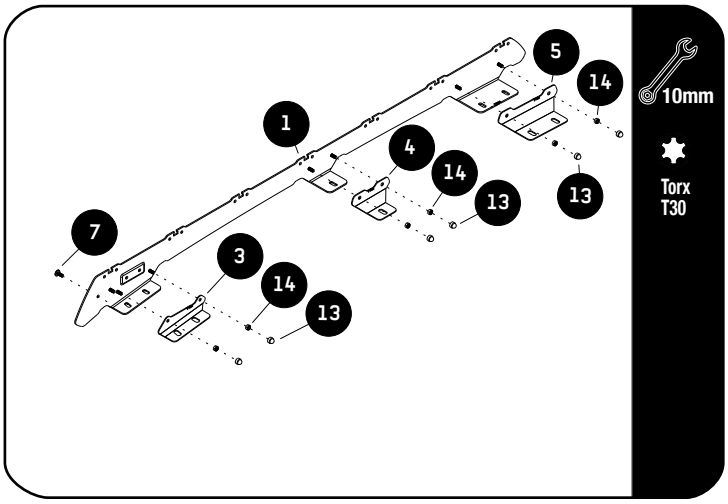

Assemble the Stiffener Plates (Items 3, 4 & 5) to the Foot Rail (Item 1) using M6 x 16 Flange Button Heads & M6 Nyloc Nuts (Items 7 & 14).

Do this for both the LH & RH foot rails.

Place M6 Nut Caps (Item 13) over all M6 Nyloc Nuts (Item 14).

2.8

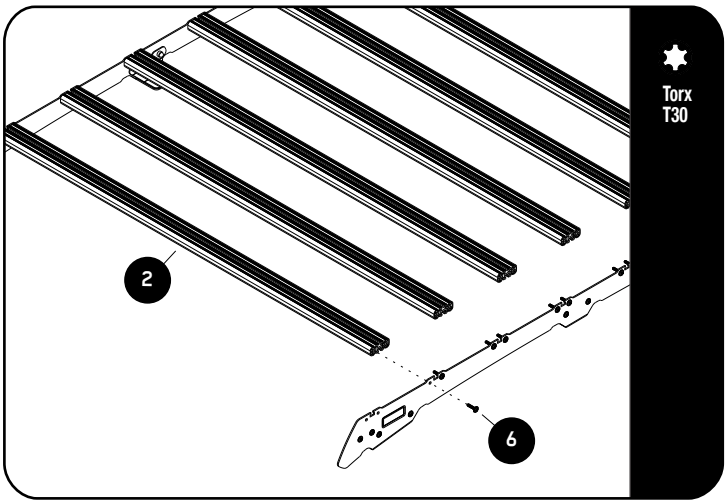

Do not fit the front slat.

Use a little oil on screw threads before inserting. Note, these are thread forming screws.

Assemble six Slats (Item 2) to the Foot Rails using M6 x 25 Thread Forming Screws (Item 6).

Tightening Torque 8-10Nm / 5.9 ft lb - 7.38 ft lb. Take care when using a cordless driver.

2.9

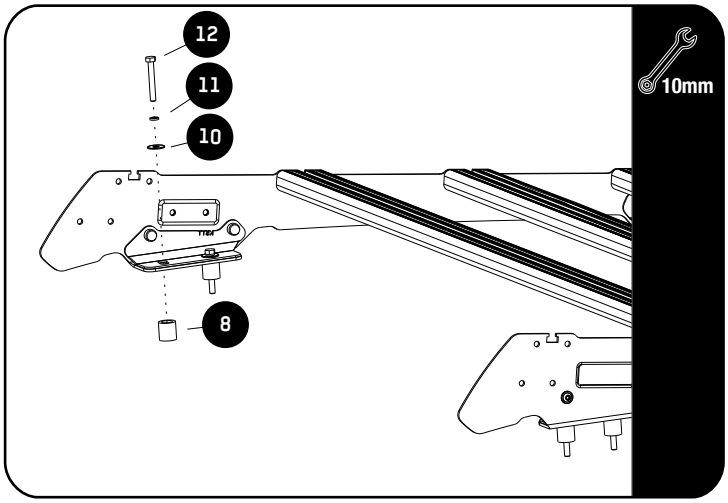

Place a bead of silicone on all hex bolt threads, before inserting & fastening.

Position the rack over the cab placing it on the spacers inserted earlier. Secure using M6 x 19 x 1 Flat Washers, M6 Spring Washers & M6 x 45 Hex Bolts (Items 10, 11 & 12). Fully tighten.

Place M6 Nut Caps over all Hex Bolts.

 © 2024 FRONT RUNNER VEHICLE OUTFITTERS

2 FIT AND SECURE

2.10 STANDARD WIND FAIRING ASSEMBLY

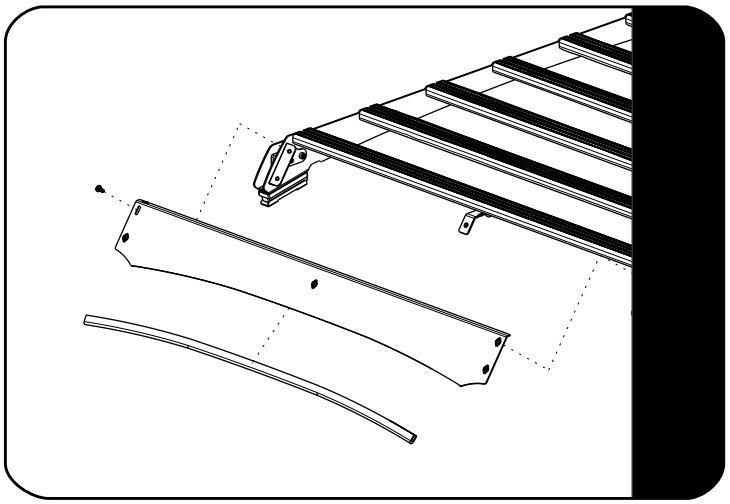

Refer to fitment guide RRAC231

2.11 LIGHT BAR WIND FAIRING ASSEMBLY

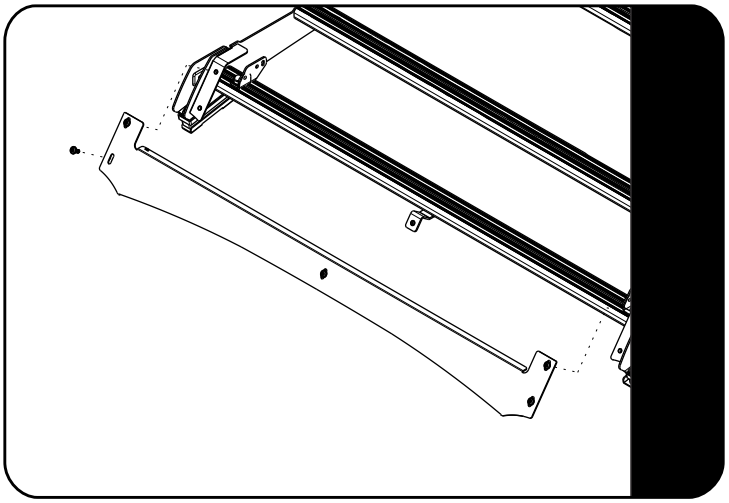

Refer to fitment guide RRAC192

© 2024 FRONT RUNNER VEHICLE OUTFITTERS

3 COMPLETION

3.1 Congratulations! You did it. Take a step back and admire your work!

4 INSTALL OTHER VEHICLE AND RACK ACCESSORIES

Now's the time to visit your favorite Front Runner Dealer in person or online.

IMPORTANT! ⚠

FRONT RUNNER RACK KITS OFTEN HAVE A HIGHER LOAD RATING THAN THE VEHICLES THEY ARE MOUNTED TO. PLEASE REFER TO YOUR SPECIFIC VEHICLE MANUFACTURER FOR A RECOMMENDED ROOF RATING. FRONT RUNNER CANNOT BE RESPONSIBLE FOR IMPROPER LOADING BEYOND THE VEHICLE MANUFACTURER'S STATED LOAD CAPACITY.

Be sure to tag us. We love to see our gear in action! #FrontRunnerOutfitters #BornToRoam

Share your adventures on:

© 2024 FRONT RUNNER VEHICLE OUTFITTERS