START HERE!

READ ME FIRST

Don't be a hero and muscle through this installation without reading these fitting instructions first! Improper installation of this gear may void certain aspects of your warranty.

Before you begin, take a moment and open all your Front Runner rack kit boxes and gather the assembly instructions for the various components.

A complete kit will contain:

1. A Front Runner Mounting System specific to your vehicle
2. A Front Runner Rack Tray or Load Bar Slats

This document will guide you through the assembly of the mounting system and assist you in fitting the roof rack tray or load bars to your specific vehicle.

Please refer to the next page for a list of all the components, quantities and tools required.

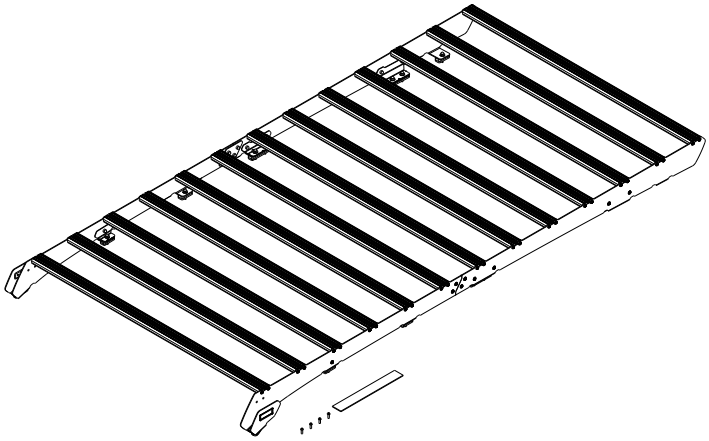

IMPORTANT WARNING! ⚠

IT IS CRITICAL THAT ALL FRONT RUNNER PRODUCTS BE PROPERLY AND SECURELY ASSEMBLED AND ATTACHED TO YOUR VEHICLE. IMPROPER ATTACHMENT COULD RESULT IN AN AUTOMOBILE ACCIDENT, AND COULD CAUSE SERIOUS BODILY INJURY OR DEATH. YOU ARE RESPONSIBLE FOR ASSEMBLING AND SECURING ALL FRONT RUNNER PRODUCTS TO YOUR VEHICLE, CHECKING THE ATTACHMENTS PRIOR TO USE, AND PERIODICALLY INSPECTING THE PRODUCTS FOR ADJUSTMENT, WEAR AND DAMAGE. THEREFORE, YOU MUST READ AND UNDERSTAND ALL OF THE INSTRUCTIONS AND PRECAUTIONS SUPPLIED WITH YOUR FRONT RUNNER PRODUCT PRIOR TO INSTALLATION OR USE. IF YOU DO NOT UNDERSTAND ALL OF THE INSTRUCTIONS AND CAUTIONS, OR IF YOU HAVE NO MECHANICAL EXPERIENCE AND ARE NOT THOROUGHLY FAMILIAR WITH THE INSTALLATION PROCEDURES, YOU SHOULD HAVE THE PRODUCT INSTALLED BY A PROFESSIONAL INSTALLER OR OTHER QUALIFIED PERSONNEL.

NOTE: Front Runner will not be responsible for any damage caused by the failure to install the product according to these instructions.

Please call us if you have any questions about the installation of this product.

 © 2023 FRONT RUNNER VEHICLE OUTFITTERS

1 GET ORGANIZED

IN THE BOX

1	1 X	Front Foot Rail LH
2	1 X	Front Foot Rail RH
3	1 X	Rear Foot Rail LH
4	1 X	Rear Foot Rail RH
5	2 X	Joiner plate
6	1 X	Front wing Bracket LH
7	1 X	Front wing Bracket RH
8	2 X	Front Stiffener Bracket
9	1 X	LH MID Stiffener Bracket
10	1 X	LH Rear Stiffener Bracket
11	1 X	RH MID Stiffener Bracket
12	1 X	RH Rear Stiffener Bracket
13	13 X	Slat
14	2 X	Front Spacer 10mm
15	6 X	10mm MID Spacer
16	6 X	6mm MID Spacer
17	4 X	10mm Rear Spacer
18	4 X	6mm Rear Spacer
19	52 X	M6 x 25 Thread Forming Screw
20	18 X	M6 x 16 Button Head Flange Screw

IN THE BOX

21	20 X	M6 Nyloc Nut
22	26 X	M6 Nut Cap
23	8 X	M6 x 19 x 1 Flat Washer
24	8 X	M8 x 19 x 2 Flat Washer
25	14 X	M6 x 35 Hex Bolt
26	2 X	M6 x 25 Countersink Screw
27	2 X	19mm x 50mm VBH Tape 3M
28	4 X	M6 x 20 Button Head Screw
29	1 X	VHB Tape 350mm x 25mm
30	8 X	M8 x 35 Hex Bolt
31	8 X	M8 Nut Cap
32	4 X	Sealing Cap
33	4 X	M6 x 12 x 1 Flat Washer

TOOLS NEEDED

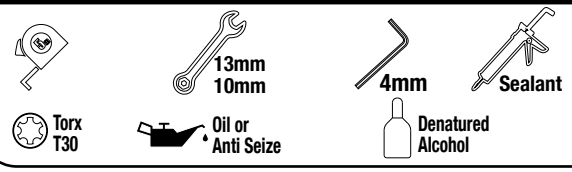

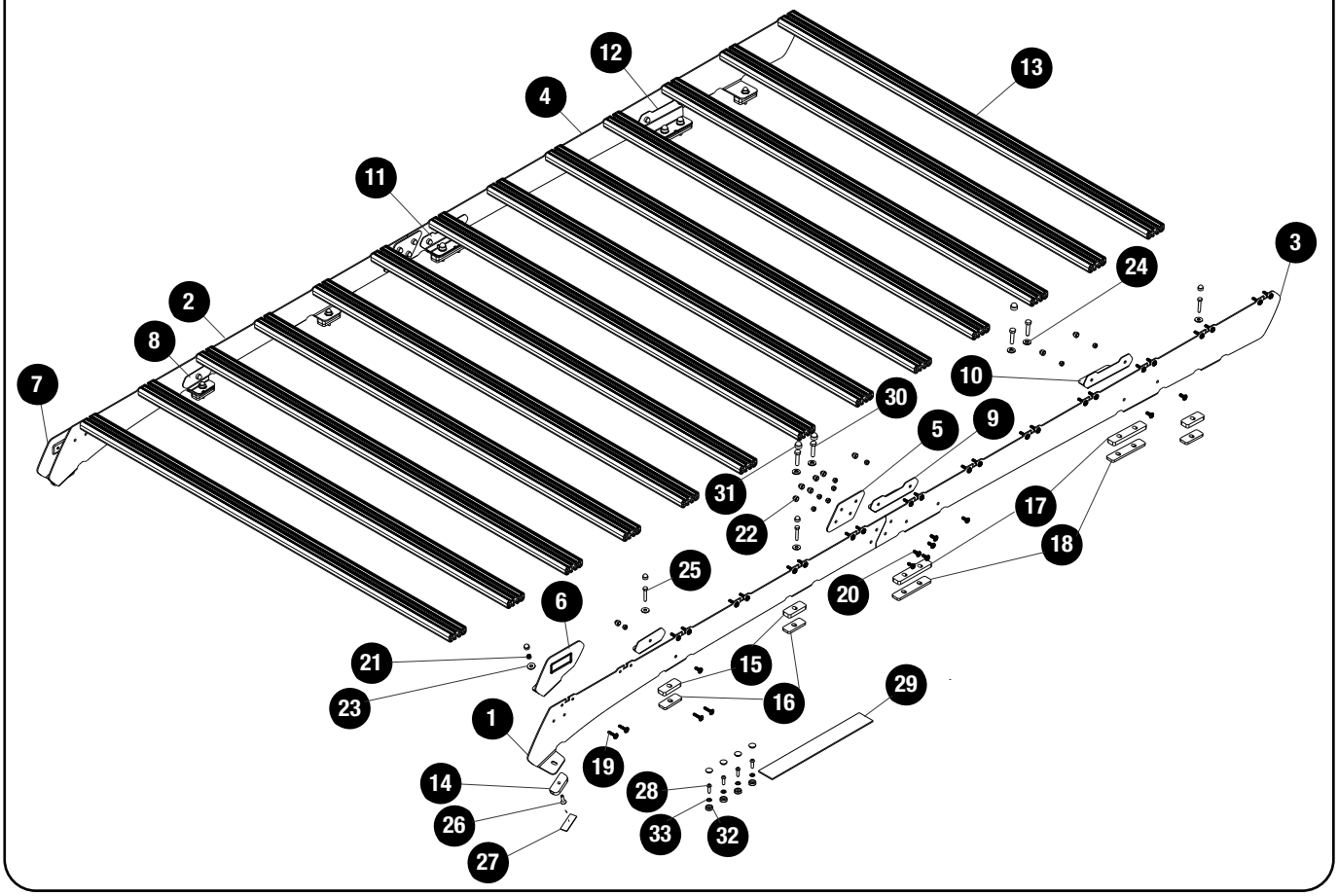

 © 2023 FRONT RUNNER VEHICLE OUTFITTERS

2 FIT AND SECURE

2.1

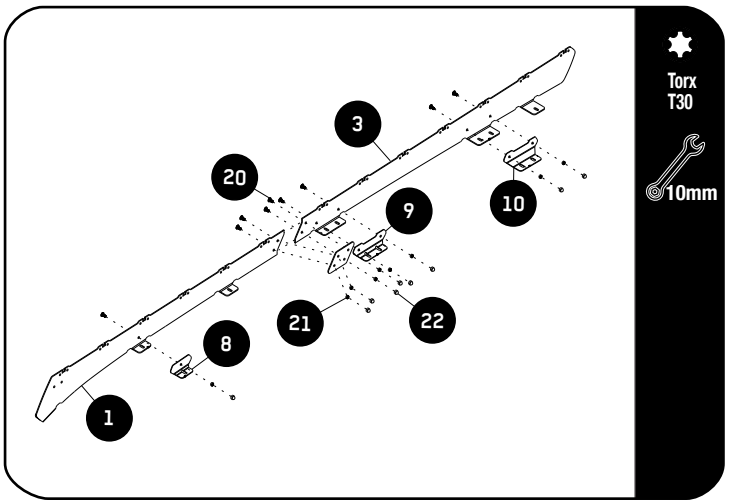

Join the Foot Rails(Item 1 & 3) together with the joiner plate (Item 5) as shown using M6x16 button head flange screws & M6 Nyloc Nuts (Items 20 & 21).

Secure the stiffener plates (Items 8, 9 & 10) to the Foot Rails (Item 1 & 3), using M6 x 16 Button head flange screws & M6 Nyloc Nuts (Items 20 & 21). Fully tighten.

Do this with both the LH & RH Foot Rails.

Place M6 Nut Caps (Item 22) over all Nyloc Nuts.

Tightening Torque 9 - 11 Nm / 6.6 - 8.1 ft lb

2.2

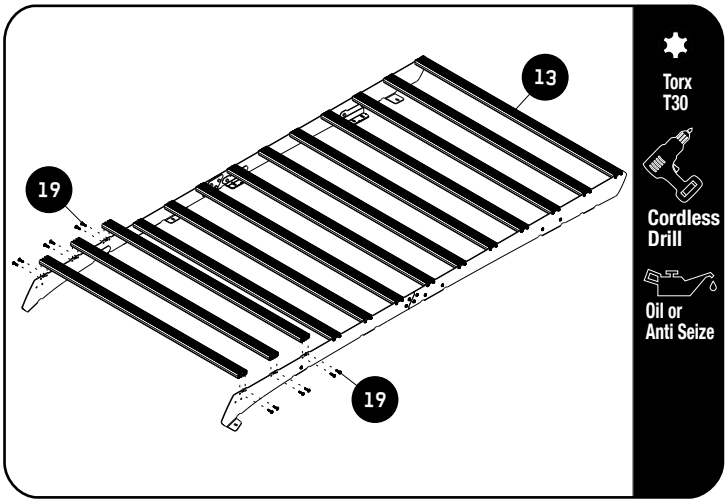

Use a little anti seize or oil on screw threads before inserting. Note these are Thread Forming Screws.

Assemble the 12 Slim Sport Slats (Item 13) to assembly 2.1 using M6 x 25 Thread Forming Screws (Item 19) and leave off the front slat.

REFER TO WIND FAIRING FITMENT GUIDE ON FRONT SLAT POSITION

Tightening Torque 8-10Nm / 5.9 ft lb - 7.38 ft lb. Take care when using a cordless driver.

2.3

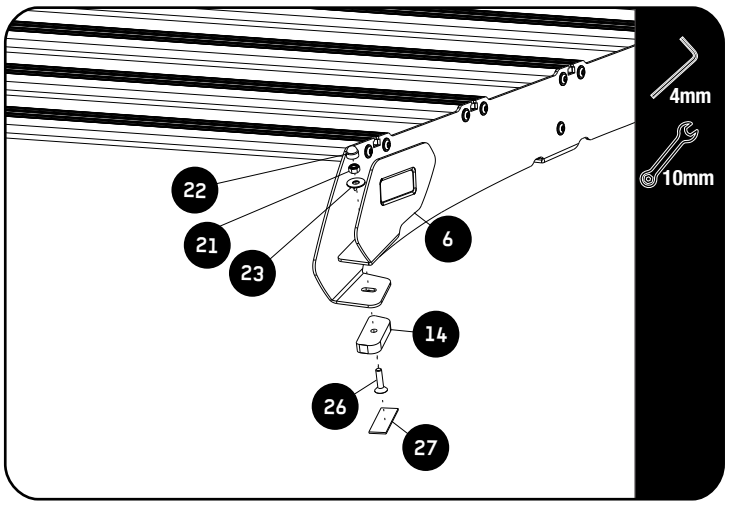

Assemble the Front wing Bracket (Item 6) to assembly 2.2.

Insert the M6 x 25 Countersink Screw (Item 26) through the bottom of the spacer (Item 14) and through the foot rail and Front wing Bracket (Item 6) as shown.Place the M6 x 19 x 1 Flat Washer (Item 23) over the M6 x 25 Countersink Screw (Item 26) together with the M6 Nylock nut and fully tighten. Place the M6 Nut cap over the M6 Nyloc Nut (Item 21 + 22).
Apply the 19mm x 50mm VHB Tape 3M (Item 27) to the underside of the spacer (Item 14). (Do not remove the backing tape yet)

Do this on the left and right side foot rails.

Before moving on to the next step, the OEM factory roof rails will need to be removed from the vehicle and the headliner will need to be dropped.

Check youtube for videos to assist in removing the rails and dropping the headliner.

© 2023 FRONT RUNNER VEHICLE OUTFITTERS

2 FIT AND SECURE

2.4

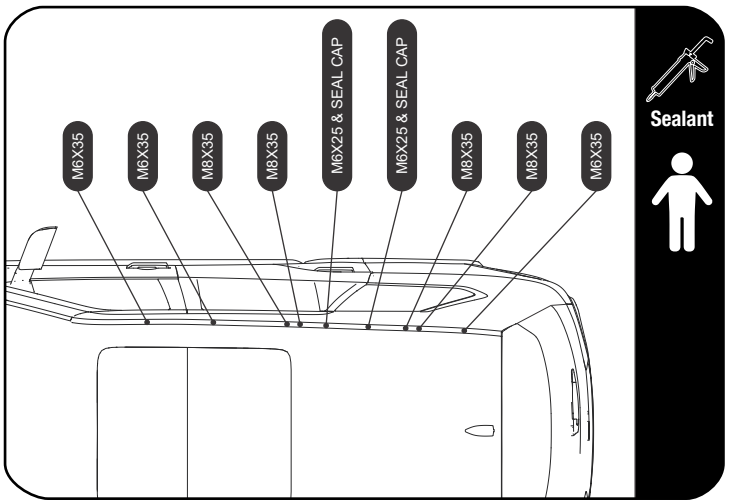

To secure the rack, the factory nuts need to be adhered to the inner roof skin. This will make the rack easily removable if needed. Unroll the 350mm long strip of VHB tape (item 29) place the eight M8 and ten M10 factory flange nuts onto the VHB tape and press down firmly (flange side down). Trim the excess tape to separate the nuts and pierce a hole with a screwdriver to allow a screw to be inserted.

Have a friend help with the next step. Using a M6 and M8 screw, insert it into the corresponding hole (see diagram) remove the VHB backing from the appropriate side nut and have your friend screw it on by a few threads from the inside of the vehicle. From the outside pull the screw upward to adhere it to the inner roof skin and remove the screw. Repeat this with all the other nuts.

2.5

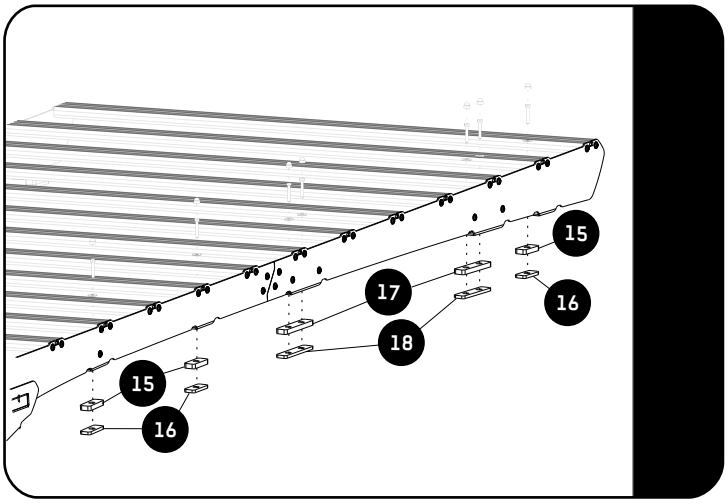

Fit the sealing cap, M6x25 Button Head Screws and M6x12x1 Flat Washers (Items 28,32 & 33) to the 4th & 5th holes from the rear. Do this on both the LH and RH side of the roof.

Place a small bead of silicon around all the remaining 14 holes (7 per side) and position the 6mm spacers over the 7 holes per side. Take note of the hole size as 4 are for M8 bolt and 3 are for M6 bolt. Place the matching 10mm spacers on top of the 6mm spacers and fill the holes with silicon.

2.6

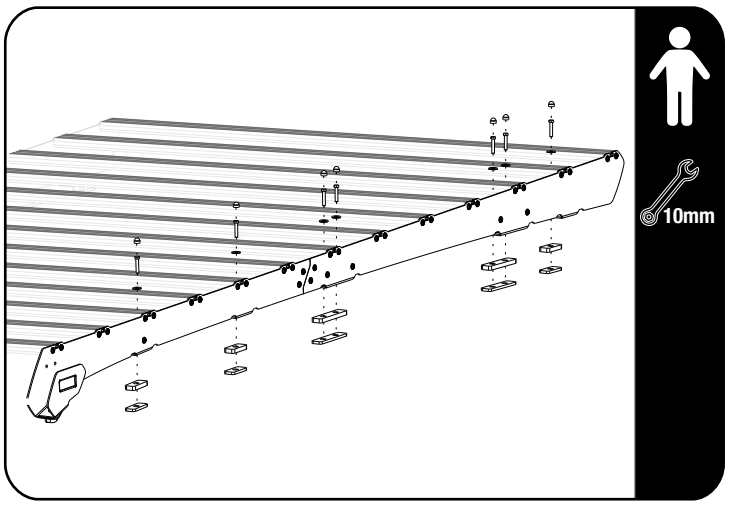

With the help of a friend lift the rack over the the roof and position it onto the spacers placed earlier.

Using the M6x35 screws (Item 25) together with M6x19 x 1 flat washers (Item 23) loosely tighten the LH and RH ditch rear screws. Lift the rack slightly in the front and remove the VHB backing. Lower the rack and position the front foot centrally in the ditch. Fit the remaining M6 screws and washers (item 25 & 23) as well as the eight M8x35 screws (Item 30) and M8 washers (Item 24) fully tighten all screws and place nut caps over all the screw heads.

Tightening Torque:
M8 : 15-20Nm / 11.06 ft lb - 14.75 ft lb
M6 : 8-10Nm / 5.9 ft lb - 7.38 ft lb

 © 2023 FRONT RUNNER VEHICLE OUTFITTERS

3 COMPLETION

3.1 Congratulations! You did it. Take a step back and admire your work!

4 INSTALL OTHER VEHICLE AND RACK ACCESSORIES

Now's the time to visit your favorite Front Runner dealer in person or online.

IMPORTANT!

FRONT RUNNER RACK KITS OFTEN HAVE A HIGHER LOAD RATING THAN THE VEHICLES THEY ARE MOUNTED TO. PLEASE REFER TO YOUR SPECIFIC VEHICLE MANUFACTURER FOR A RECOMMENDED ROOF RATING. FRONT RUNNER CANNOT BE RESPONSIBLE FOR IMPROPER LOADING BEYOND THE VEHICLE MANUFACTURER'S STATED LOAD CAPACITY.

Be sure to tag us. We love to see our gear in action! #FrontRunnerOutfitters #BornToRoam

Share your adventures on:

© 2023 FRONT RUNNER VEHICLE OUTFITTERS