START HERE!

READ ME FIRST

Don't be a hero and muscle through this installation without reading these fitting instructions first! Improper installation of this gear may void certain aspects of your warranty.

Before you begin, take a moment and open all your Front Runner rack kit boxes and gather the assembly instructions for the various components.

A complete kit will contain:

1. A Front Runner Mounting system specific to your vehicle
2. A Front Runner Rack Tray or Load bar Slats

This document will guide you through the assembly of the mounting system and assist you in fitting the roof rack tray or load bars to your specific vehicle.

Please refer to the next page for a list of all the components, quantities and tools required.

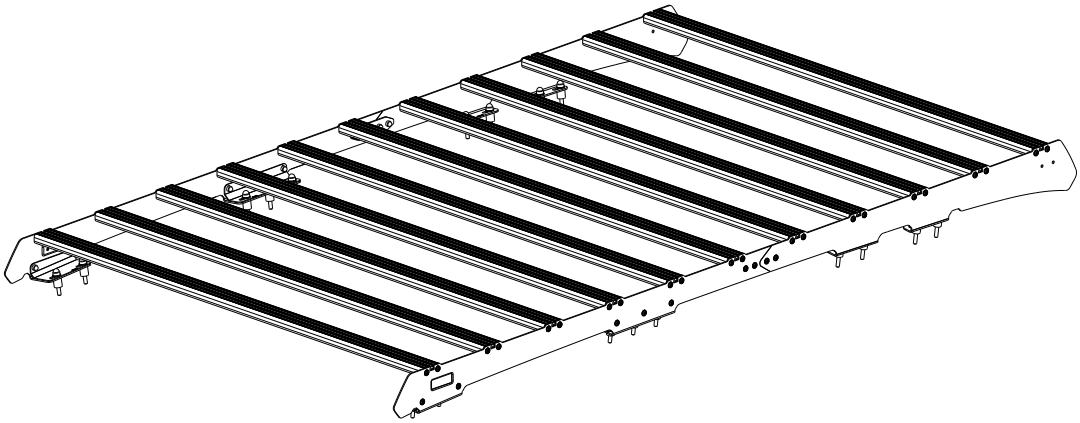

IMPORTANT WARNING! ⚠

IT IS CRITICAL THAT ALL FRONT RUNNER PRODUCTS BE PROPERLY AND SECURELY ASSEMBLED AND ATTACHED TO YOUR VEHICLE. IMPROPER ATTACHMENT COULD RESULT IN AN AUTOMOBILE ACCIDENT, AND COULD CAUSE SERIOUS BODILY INJURY OR DEATH. YOU ARE RESPONSIBLE FOR ASSEMBLING AND SECURING ALL FRONT RUNNER PRODUCTS TO YOUR VEHICLE, CHECKING THE ATTACHMENTS PRIOR TO USE, AND PERIODICALLY INSPECTING THE PRODUCTS FOR ADJUSTMENT, WEAR AND DAMAGE. THEREFORE, YOU MUST READ AND UNDERSTAND ALL OF THE INSTRUCTIONS AND PRECAUTIONS SUPPLIED WITH YOUR FRONT RUNNER PRODUCT PRIOR TO INSTALLATION OR USE. IF YOU DO NOT UNDERSTAND ALL OF THE INSTRUCTIONS AND CAUTIONS, OR IF YOU HAVE NO MECHANICAL EXPERIENCE AND ARE NOT THOROUGHLY FAMILIAR WITH THE INSTALLATION PROCEDURES, YOU SHOULD HAVE THE PRODUCT INSTALLED BY A PROFESSIONAL INSTALLER OR OTHER QUALIFIED PERSONNEL.

NOTE: Front Runner will not be responsible for any damage caused by the failure to install the product according to these instructions.
Please call us if you have any questions about the installation of this product.

 © 2023 FRONT RUNNER VEHICLE OUTFITTERS

1 GET ORGANIZED

IN THE BOX

1	2 X	Foot Rail Rear LH / RH
2	2 X	Foot Rail Front LH / RH
3	2 X	Stiffener Plate Rear
4	2 X	Stiffener Plate Front
5	18 X	M8 x 19 x 2 Flat Washer
6	18 X	M8 x 50 Hex Bolt
7	18 X	M8 Nut Cap
8	18 X	M6 x 16 Flange Button Head
9	44 X	M6 x 25 Tread Forming Screw
10	11 X	Slat
11	2 X	Joiner Plate
12	18 X	M6 Nyloc Nut
13	18 X	M6 Nut Cap
14	18 X	19 x 22 Spacer

TOOLS NEEDED

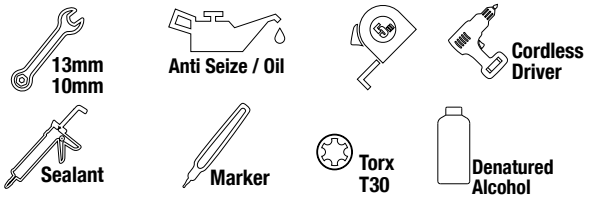

FIGURE 1.1

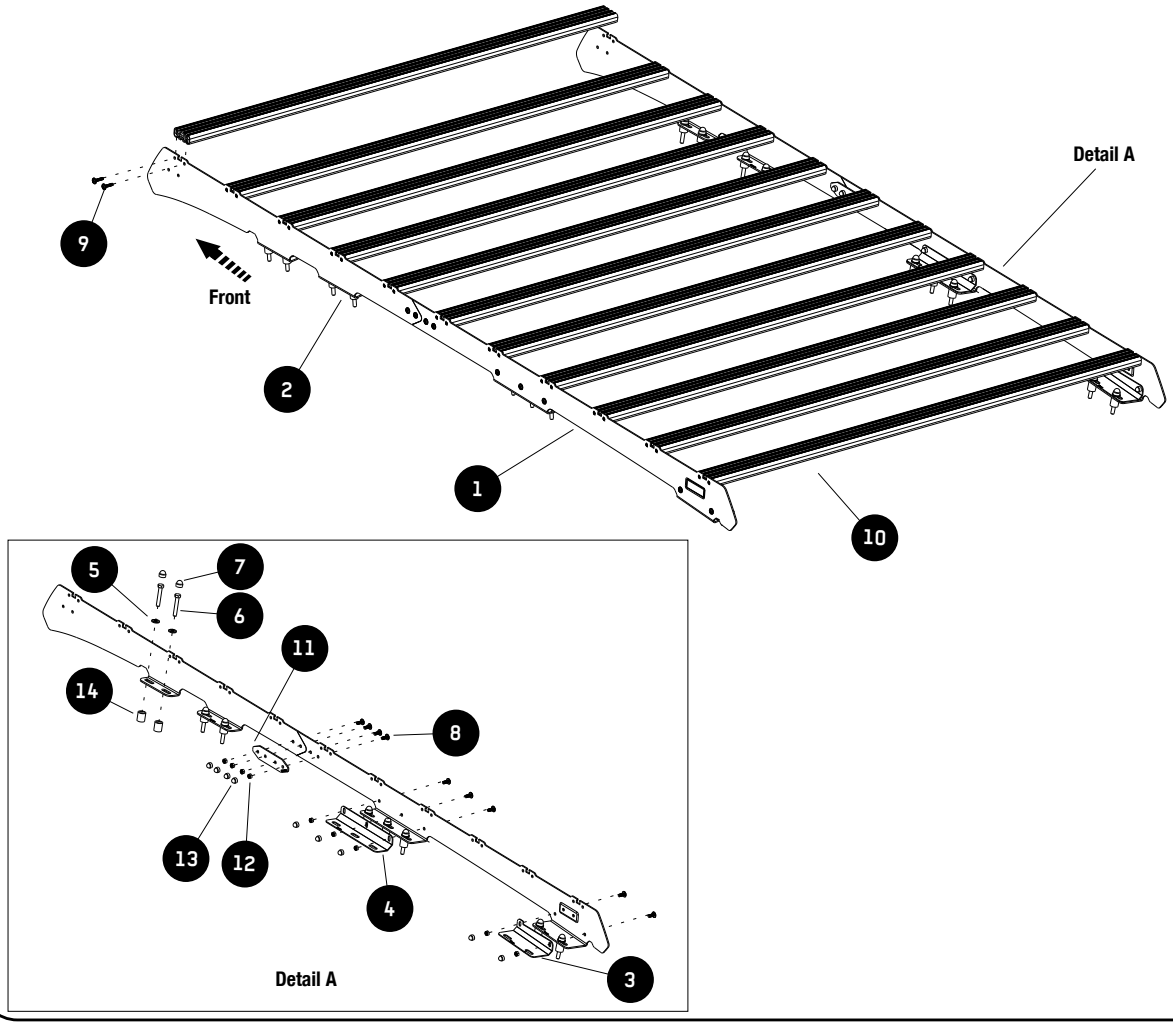

 © 2023 FRONT RUNNER VEHICLE OUTFITTERS

2 ASSEMBLY

2.1

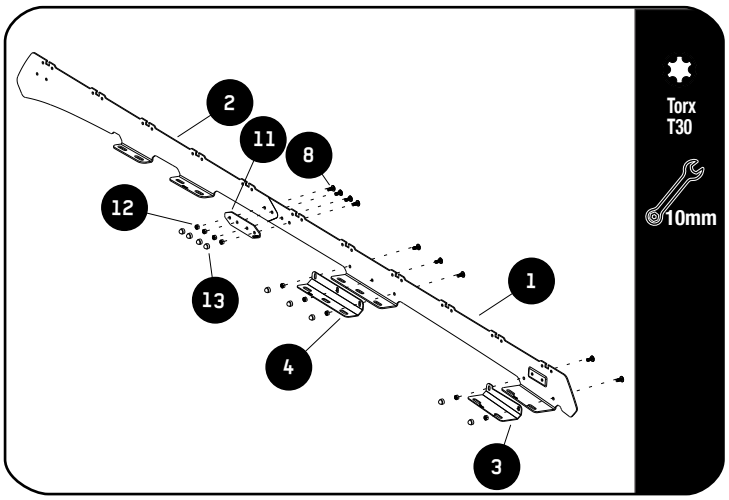

Secure the Stiffener Plates Front and Rear (Items 3 & 4) to the Foot Rails (Items 1) as shown using M6 x 16 Flange Button Head Bolts and M6 Nyloc Nuts (Items 8 & 12).

Secure the Joiner Plates (Item 11) to the Foot Rails (Items 1 & 2) using M6 x 16 Flange Button Head Bolts and M6 Nyloc Nuts (Items 8 & 12)

Do this to both LH & RH Foot Rails.

Place M6 Nut Caps (Item 13) over all Nyloc Nuts.

2.2

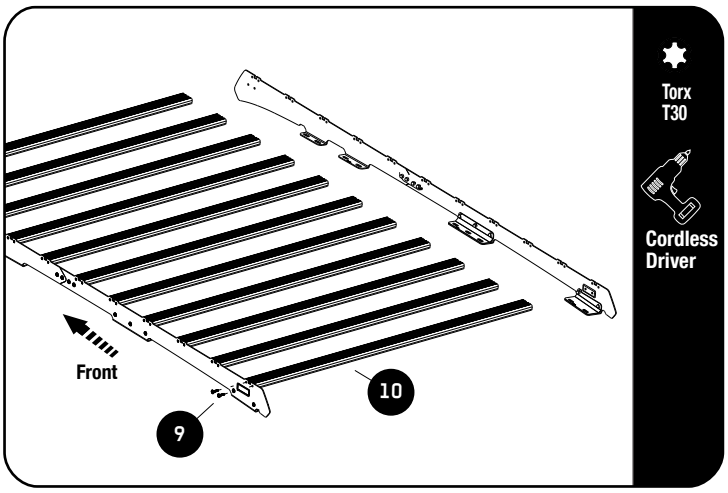

Fit 11 Slimsport Slats (Item 10) to assembly 2.1 using M6 x 25 Thread Forming Screws (Item 9).

Note: Do not fit front slat.

Apply a little Anti Seize / oil on screw threads before inserting. Note these are thread forming screws.

Tightening Torque 8-10Nm / 5.9 ft lb - 7.38 ft lb. Take care when using a cordless driver.

3 FIT AND SECURE

3.1

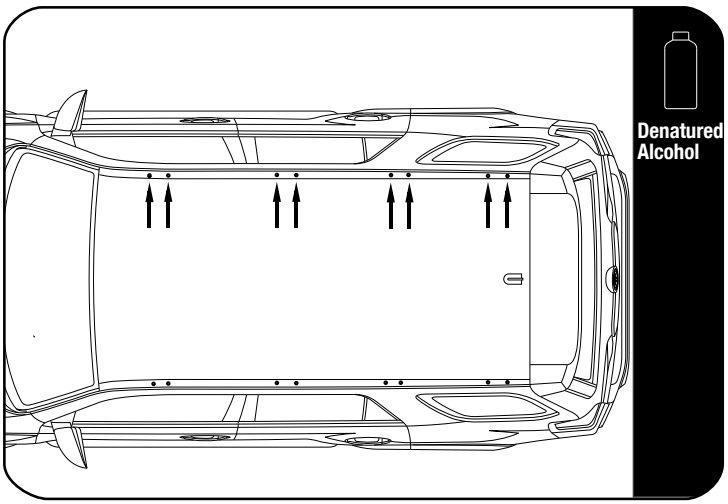

Remove Ditch Trim on both sides.

Clean thoroughly around each mounting hole.

© 2023 FRONT RUNNER VEHICLE OUTFITTERS

3 FIT AND SECURE

3.2

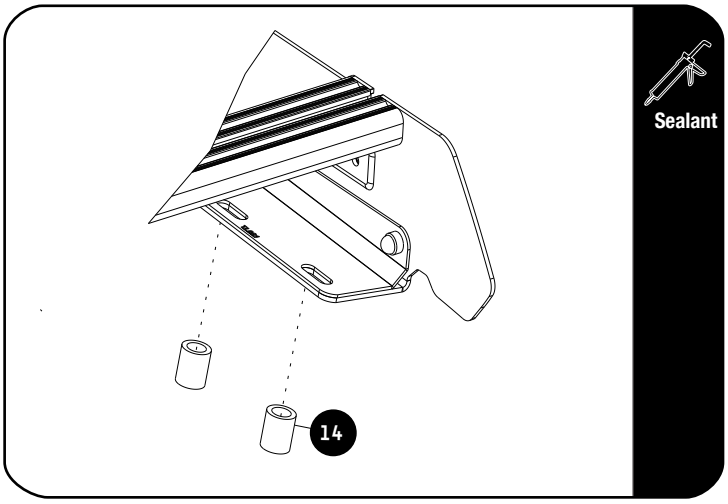

Place silicone around each of the fixing points.

Place Spacers (Item 14) over the mounting holes.

3.3

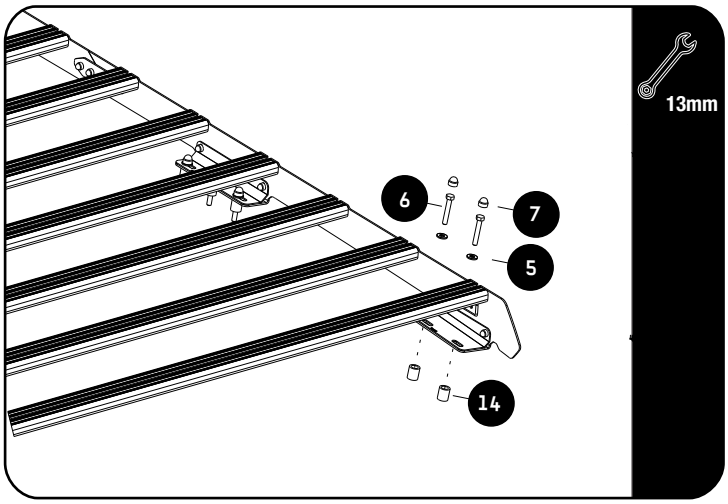

Place a bead of silicone down the length of each M8x50 bolt before inserting into Spacer (Item 14) and Factory Mounting Point.

Secure Rack assembly 2.2 using M8 x 19 x 2 Flat Washers and M8 x 50 Hex Bolts. (Items 5 & 6).

Fully tighten all fasteners.

Place M8 Nut Caps (Item 7) over all Hex Bolts.

<u>Tightening Torque</u>:

M8 : 15-20Nm / 11.06 ft lb - 14.75 ft lb

© 2023 FRONT RUNNER VEHICLE OUTFITTERS

4 FIT AND SECURE

4.1 STANDARD WIND FAIRING ASSEMBLY

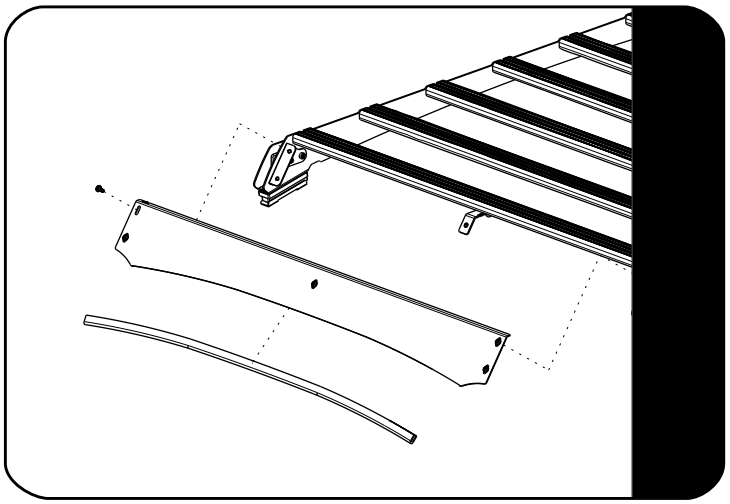

Refer to fitment guide RRAC281

4.2 LIGHT BAR WIND FAIRING ASSEMBLY

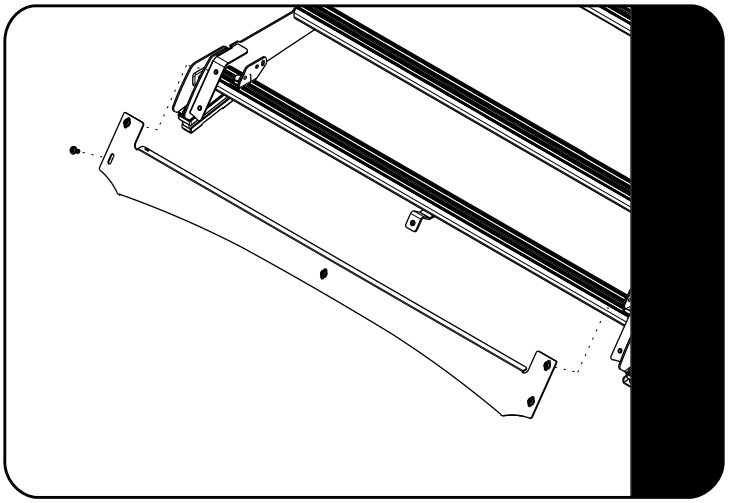

Refer to fitment guide RRAC282

© 2023 FRONT RUNNER VEHICLE OUTFITTERS

5 COMPLETION

5.1 Congratulations! You did it. Take a step back and admire your work!

6 INSTALL OTHER VEHICLE AND RACK ACCESSORIES

Now's the time to visit your favorite Front Runner dealer in person or online.

IMPORTANT! ⚠

FRONT RUNNER RACK KITS OFTEN HAVE A HIGHER LOAD RATING THAN THE VEHICLES THEY ARE MOUNTED TO. PLEASE REFER TO YOUR SPECIFIC VEHICLE MANUFACTURER FOR A RECOMMENDED ROOF RATING. FRONT RUNNER CANNOT BE RESPONSIBLE FOR IMPROPER LOADING BEYOND THE VEHICLE MANUFACTURER'S STATED LOAD CAPACITY.

Be sure to tag us. We love to see our gear in action! #FrontRunnerOutfitters #BornToRoam

Share your adventures on:

© 2023 FRONT RUNNER VEHICLE OUTFITTERS