START HERE!

READ ME FIRST

Don't be a hero and muscle through this installation without reading these fitting instructions first! Improper installation of this gear may void certain aspects of your warranty.

Before you begin, take a moment and open all your Front Runner Rack Kit boxes and gather the assembly instructions for the various components.

A complete kit will contain:

1. Front Runner Slimsport Kit

This document will guide you through the assembly of the Mounting System and assist you in fitting the Rack Tray or Load Bars to your specific vehicle.

Please refer to the next page for a list of all the components, quantities and tools required.

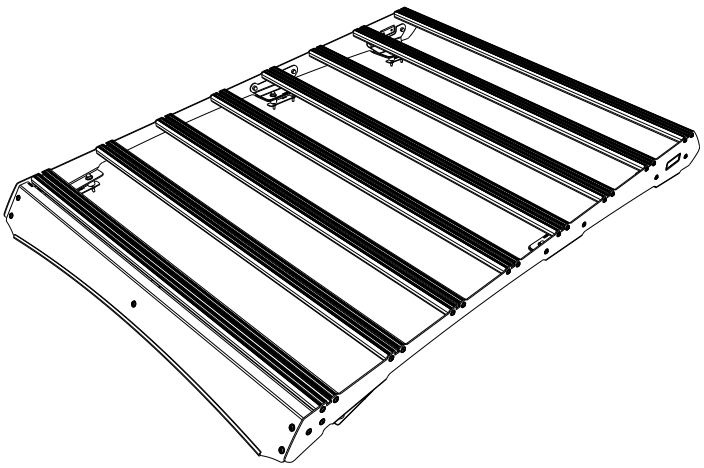

IMPORTANT WARNING! ⚠

IT IS CRITICAL THAT ALL FRONT RUNNER PRODUCTS BE PROPERLY AND SECURELY ASSEMBLED AND ATTACHED TO YOUR VEHICLE. IMPROPER ATTACHMENT COULD RESULT IN AN AUTOMOBILE ACCIDENT, AND COULD CAUSE SERIOUS BODILY INJURY OR DEATH. YOU ARE RESPONSIBLE FOR ASSEMBLING AND SECURING ALL FRONT RUNNER PRODUCTS TO YOUR VEHICLE, CHECKING THE ATTACHMENTS PRIOR TO USE, AND PERIODICALLY INSPECTING THE PRODUCTS FOR ADJUSTMENT, WEAR AND DAMAGE. THEREFORE, YOU MUST READ AND UNDERSTAND ALL OF THE INSTRUCTIONS AND PRECAUTIONS SUPPLIED WITH YOUR FRONT RUNNER PRODUCT PRIOR TO INSTALLATION OR USE. IF YOU DO NOT UNDERSTAND ALL OF THE INSTRUCTIONS AND CAUTIONS, OR IF YOU HAVE NO MECHANICAL EXPERIENCE AND ARE NOT THOROUGHLY FAMILIAR WITH THE INSTALLATION PROCEDURES, YOU SHOULD HAVE THE PRODUCT INSTALLED BY A PROFESSIONAL INSTALLER OR OTHER QUALIFIED PERSONNEL.

NOTE: Front Runner will not be responsible for any damage caused by the failure to install the product according to these instructions.

Please call us if you have any questions about the installation of this product.

 © 2022 FRONT RUNNER VEHICLE OUTFITTERS

1 GET ORGANIZED

IN THE BOX

1	2 X	Foot Rail 1 LH + 1 RH
2	2 X	Stiffener Plate 01 1LH + 1RH
2	2 X	Stiffener Plate 02 1LH + 1RH
4	8 X	Spacer 19 x 24
5	4 X	Spacer 19 x 20
6	4 X	Nut Plate 01
7	2 X	Nut Plate 02
8	12 X	M6 x 19 x 1 Flat Washer
9	12 X	M6 Spring Washer
10	12 X	M6 x 50 Hex Head Bolt
11	20 X	M6 Nut Cap
12	8 X	M6 x 16 Button Head Flange Bolt
13	8 X	M6 Nyloc Nut
14	32 X	M6 x 25 Thread Forming Screw
15	8 X	Narrow Slat (1140mm Long)

TOOLS NEEDED

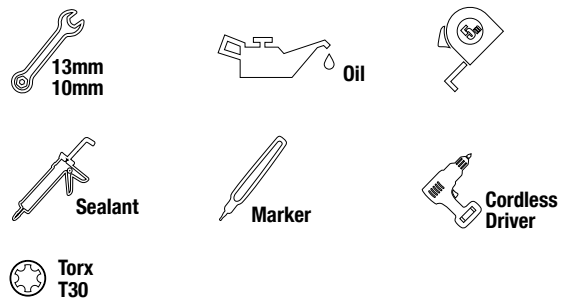

FIGURE 1.1

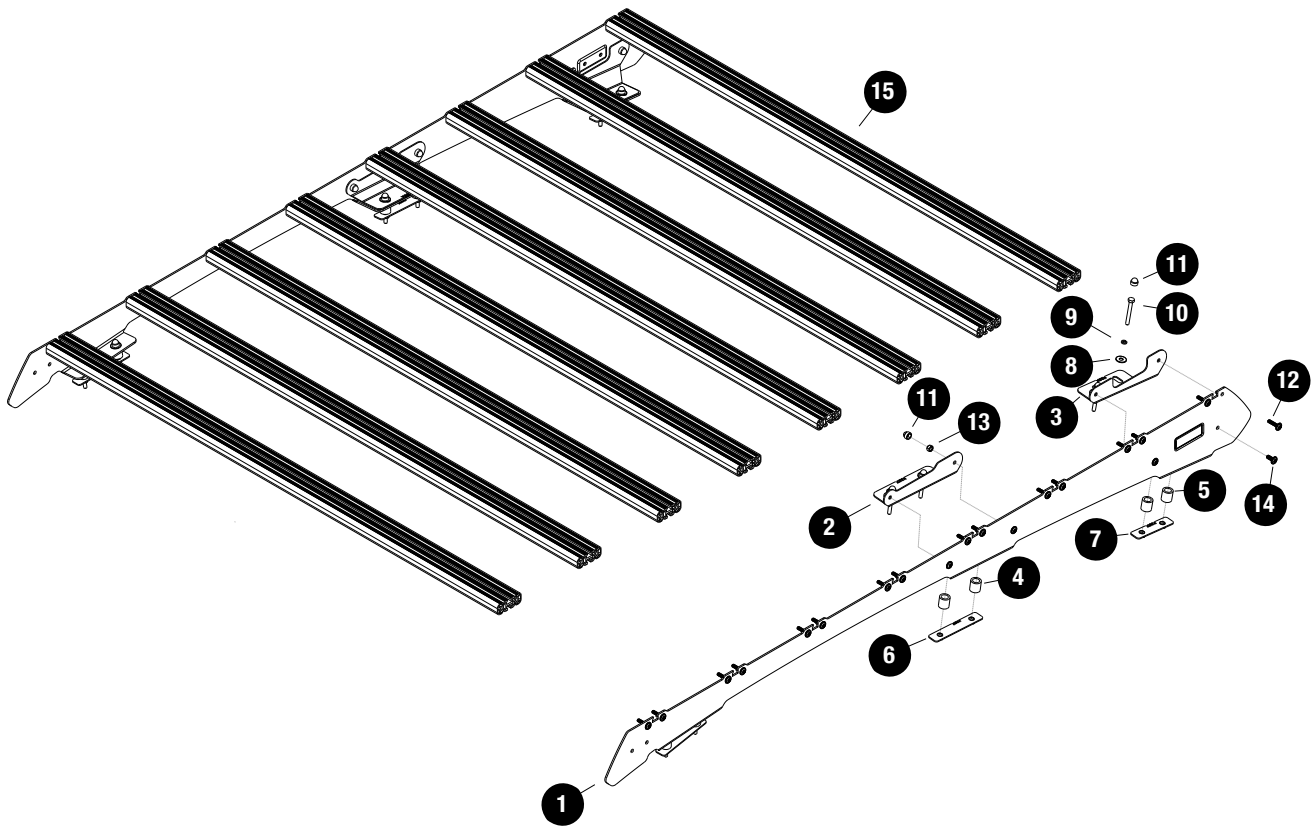

 © 2022 FRONT RUNNER VEHICLE OUTFITTERS

2 FIT AND SECURE

2.1

Drop the vehicle's roof lining.

Look online for videos to assist.

2.2

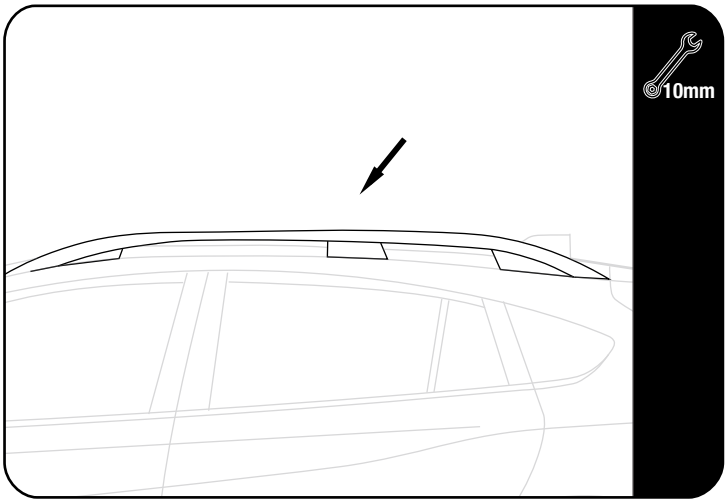

Remove the vehicle's Factory Roof Rails.

2.3

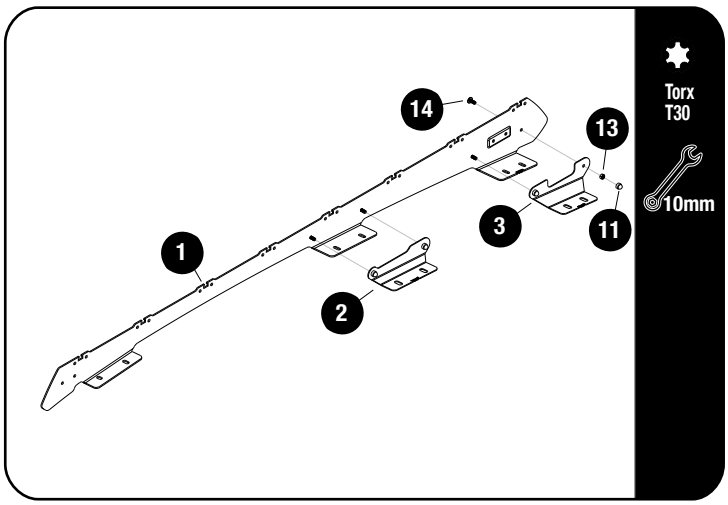

Secure the stiffener plates (Items 2 & 3) to the Foot Rails (Item 1), using M6 x 16 Flange Button Heads & M6 Nyloc Nuts (Items 13 & 14). Fully tighten.

Do this to both LH & RH Foot Rails.

Place M6 Nut Caps (Item 11) over all Nyloc Nuts.

Tightening Torque 9 - 11 Nm / 6.6 - 8.1 ft lb

© 2022 FRONT RUNNER VEHICLE OUTFITTERS

2 FIT AND SECURE

2.4

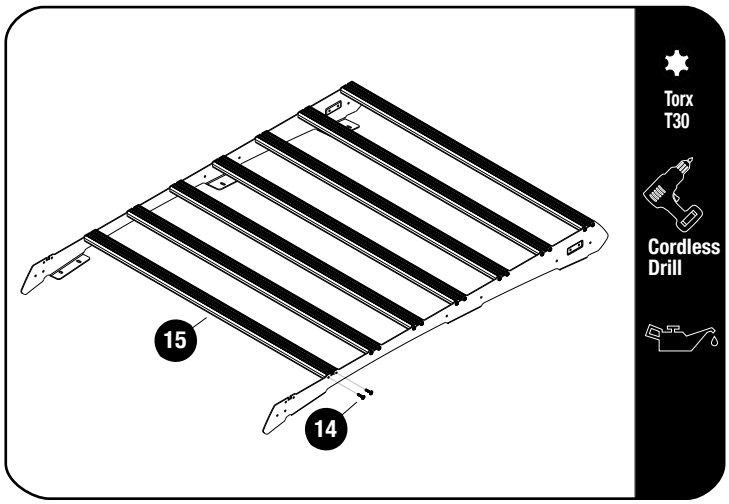

NOTE: Do not fit the front slat yet.

Use a little oil on screw threads before inserting. Note these are Thread Forming Screws.

Assemble seven Narrow Slats (Item 15) to assembly 2.3 using M6 x 25 Thread Forming Screws (Item 14).

Tightening Torque 8-10Nm / 5.9 ft lb - 7.38 ft lb. Take care when using a cordless driver.

2.5

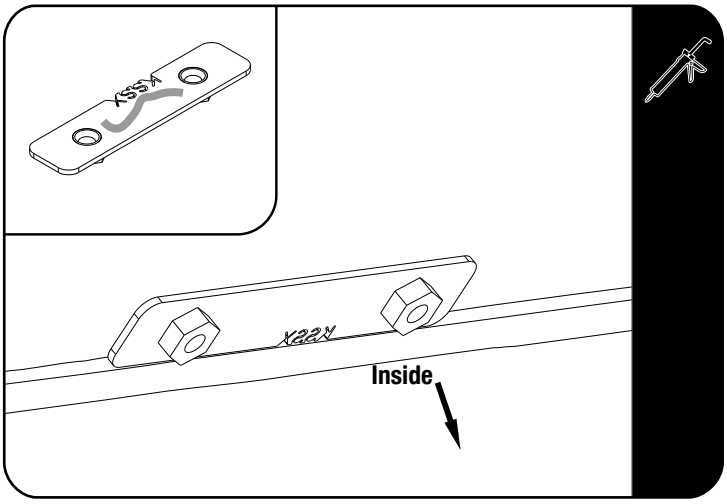

Apply a bead of sealant on the six Nut Plates (Items 6 & 7), and secure the Slimsport Roof Rack to the Nut assemblys as shown in Step 2.6. This will allow easy removal of the rack in the future.

Refer to Fig 1.1 for positioning.

2.6

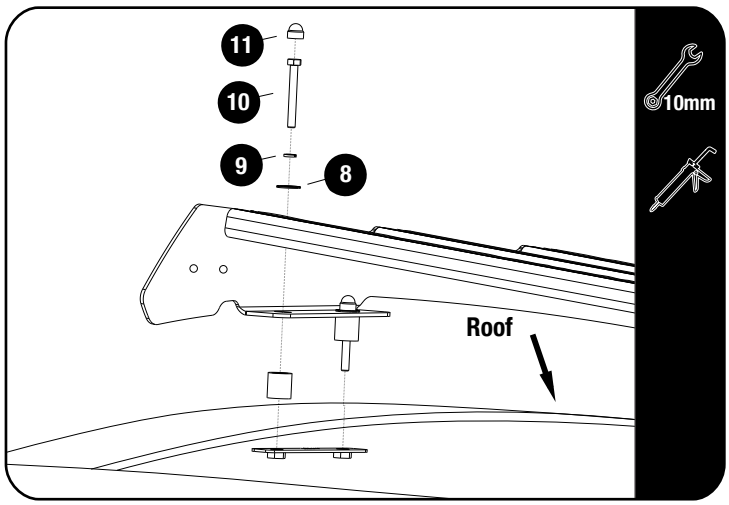

Apply Sealant over the 12 holes on the outside of the roof.

Place Spacers (Items 4 & 5) over the holes.

Refer to Fig 1.1 for Spacers positioning.

Apply a bead of sealant on the threads of the M6 x 50 Hex Bolts and secure the Slimsport Roof Rack to the Nut Plates inserted in 2.7 using M6 x 50 Hex Bolts, M6 Spring Washers & M6 x 19 x 1 Flat Washers (Items 8, 9 & 10). Fully tighten.

Tightening Torque 9 - 11 Nm / 6.6 - 8.1 ft lb

Place M6 Nut Caps (Item 11) over all Hex Bolts.

© 2022 FRONT RUNNER VEHICLE OUTFITTERS

2 FIT AND SECURE

2.7 STANDARD WIND FAIRING ASSEMBLY

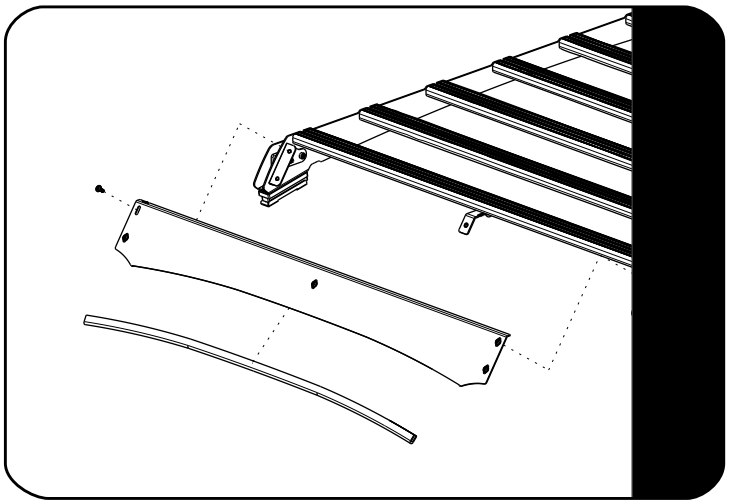

Refer to fitment guide RRAC235

2.8 LIGHT BAR WIND FAIRING ASSEMBLY

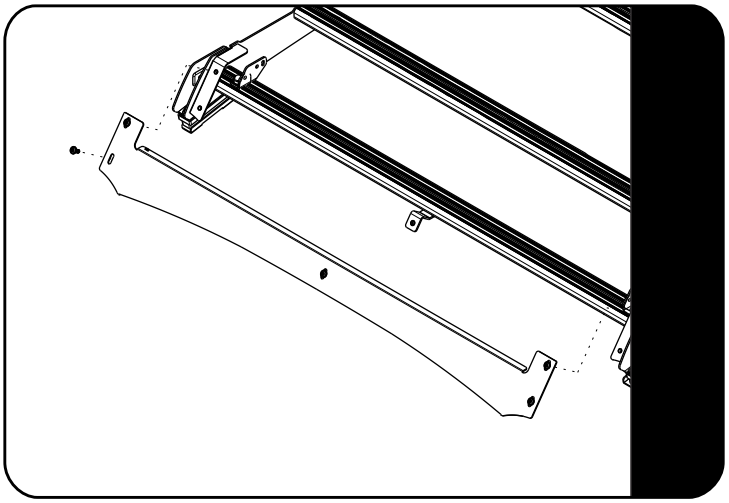

Refer to fitment guide RRAC211

© 2022 FRONT RUNNER VEHICLE OUTFITTERS

3 COMPLETION

3.1 Congratulations! You did it. Take a step back and admire your work!

4 INSTALL OTHER VEHICLE AND RACK ACCESSORIES

Now's the time to visit your favorite Front Runner dealer in person or online.

IMPORTANT! ⚠

FRONT RUNNER RACK KITS OFTEN HAVE A HIGHER LOAD RATING THAN THE VEHICLES THEY ARE MOUNTED TO. PLEASE REFER TO YOUR SPECIFIC VEHICLE MANUFACTURER FOR A RECOMMENDED ROOF RATING. FRONT RUNNER CANNOT BE RESPONSIBLE FOR IMPROPER LOADING BEYOND THE VEHICLE MANUFACTURER'S STATED LOAD CAPACITY.

Be sure to tag us. We love to see our gear in action! #FrontRunnerOutfitters #BornToRoam

Share your adventures on:

© 2022 FRONT RUNNER VEHICLE OUTFITTERS