START HERE!

READ ME FIRST

Don't be a hero and muscle through this installation without reading these fitting instructions first! Improper installation of this gear may void certain aspects of your warranty.

Before you begin, take a moment and open all your Front Runner rack kit boxes and gather the assembly instructions for the various components.

A complete kit will contain:

1. A Front Runner SlimSport Kit

This document will guide you through the assembly of the mounting system and assist you in fitting the roof rack tray or load bars to your specific vehicle.

Please refer to the next page for a list of all the components, quantities and tools required.

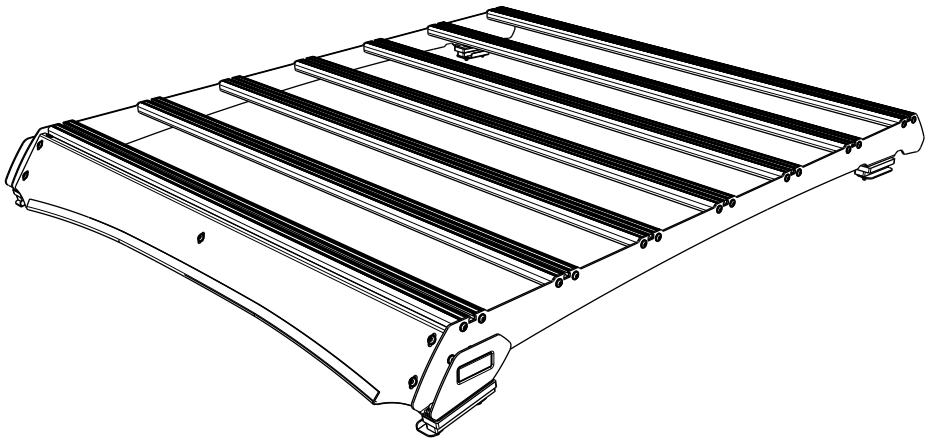

IMPORTANT WARNING! ⚠

IT IS CRITICAL THAT ALL FRONT RUNNER PRODUCTS BE PROPERLY AND SECURELY ASSEMBLED AND ATTACHED TO YOUR VEHICLE. IMPROPER ATTACHMENT COULD RESULT IN AN AUTOMOBILE ACCIDENT, AND COULD CAUSE SERIOUS BODILY INJURY OR DEATH. YOU ARE RESPONSIBLE FOR ASSEMBLING AND SECURING ALL FRONT RUNNER PRODUCTS TO YOUR VEHICLE, CHECKING THE ATTACHMENTS PRIOR TO USE, AND PERIODICALLY INSPECTING THE PRODUCTS FOR ADJUSTMENT, WEAR AND DAMAGE. THEREFORE, YOU MUST READ AND UNDERSTAND ALL OF THE INSTRUCTIONS AND PRECAUTIONS SUPPLIED WITH YOUR FRONT RUNNER PRODUCT PRIOR TO INSTALLATION OR USE. IF YOU DO NOT UNDERSTAND ALL OF THE INSTRUCTIONS AND CAUTIONS, OR IF YOU HAVE NO MECHANICAL EXPERIENCE AND ARE NOT THOROUGHLY FAMILIAR WITH THE INSTALLATION PROCEDURES, YOU SHOULD HAVE THE PRODUCT INSTALLED BY A PROFESSIONAL INSTALLER OR OTHER QUALIFIED PERSONNEL.

NOTE: Front Runner will not be responsible for any damage caused by the failure to install the product according to these instructions.
Please call us if you have any questions about the installation of this product.

 © 2022 FRONT RUNNER VEHICLE OUTFITTERS

1 GET ORGANIZED

IN THE BOX

1	2 X	Foot Rail 1LH & 1RH
2	2 X	Dimple Plate 1LH & 1RH
3	2 X	Front 10mm Spacer Top
4	2 X	Front 10mm Spacer Bottom
5	2 X	Rear 10mm Spacer Top
6	2 X	Rear 10mm Spacer Bottom
7	7 X	Slimsport Slat
8	28 X	M6x25 Thread Forming Screw
9	10 X	M6x19x1 Flat Washer
10	8 X	M6 Spring Washer
11	8 X	M6x50 Hex Bolt
12	8 X	M6 Nut Cap
13	2 X	Nut Plate
14	2 X	Universal Screw Cap (USA Spec only)
15	2 X	M6x12x1 Flat Washer (USA Spec only)
16	2 X	M6x25 Button Head (USA Spec only)
17	2 X	M6 Nyloc Nut (USA Spec only)

TOOLS NEEDED

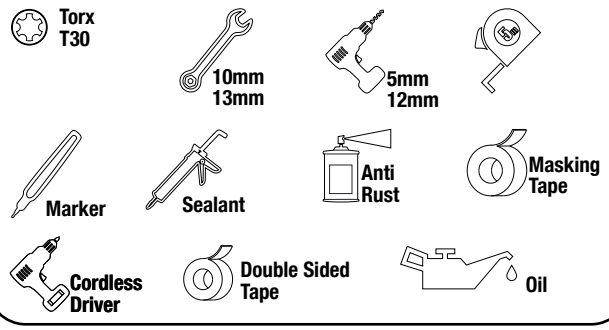

FIGURE 1.1

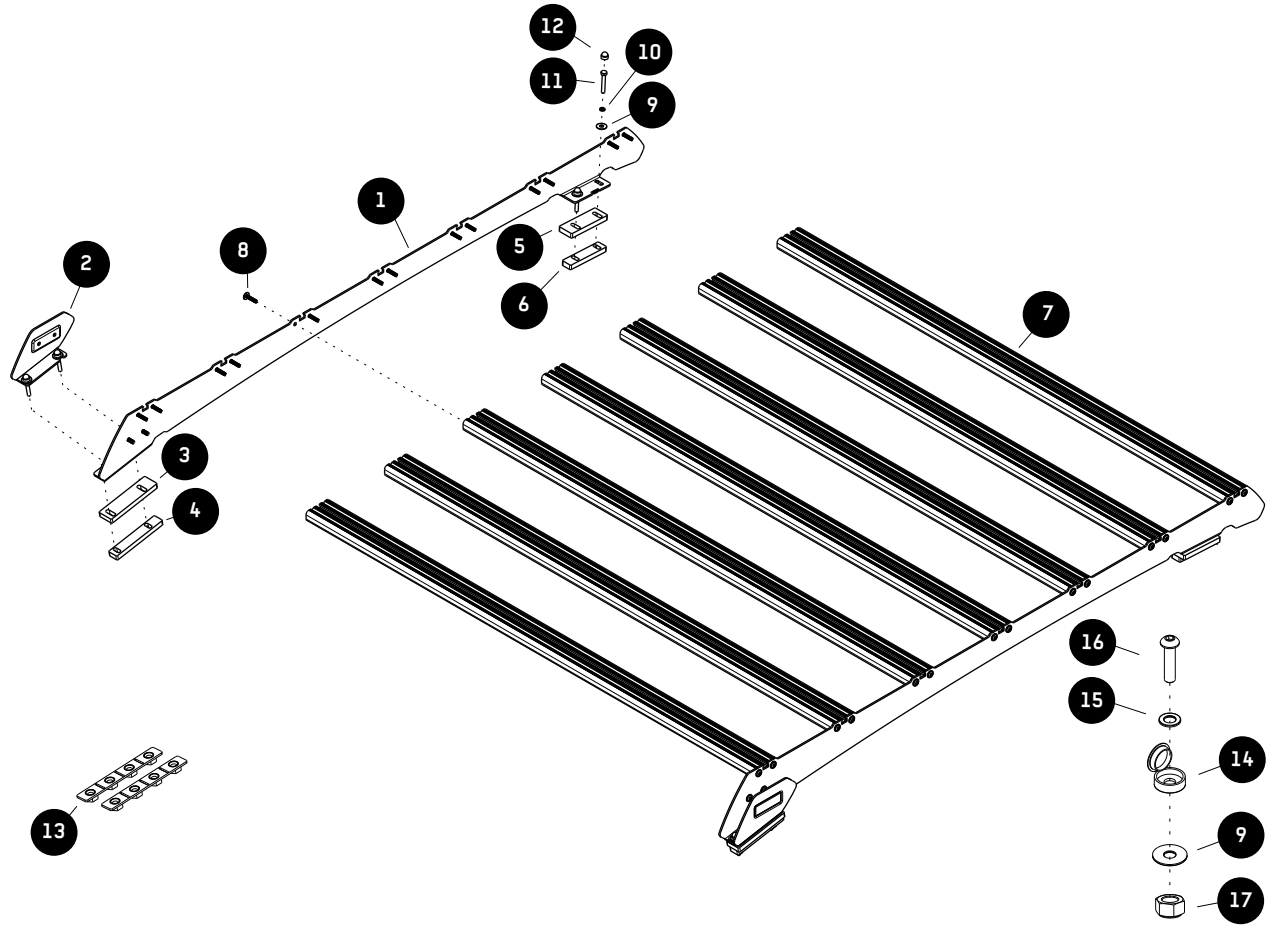

 © 2022 FRONT RUNNER VEHICLE OUTFITTERS

2 FIT AND SECURE

⚠ USA MODELS ONLY

2.10

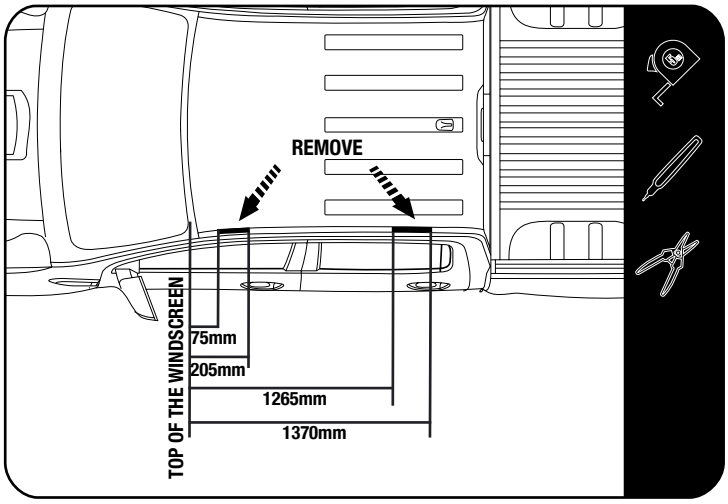

DITCH TRIM OPTION

Starting at the top edge of the vehicle's windscreen, measure and mark the dimensions as shown onto both the ditch LH & RH trim pieces.

Remove the two trim pieces and cut on each of your markings. Make sure to mark the various pieces so that you are able to place them back in their correct positions.

Refit the trim pieces in place using double sided tape NOT SUPPLIED.

Make sure the ditch & trim is clean before applying the tape.

NO TRIM OPTION

Remove the two ditch trim pieces and store in a safe place. Apply some silicone over the two rear holes. The two front holes will be used. Use the universal screw cap, M6 x 20 Button Head, M6 x 12 x 1 Flat Washer M6 x 19 x 1 Flat Washer & M6 Nyloc Nut (Items 9, 14, 15, 16 & 17) to seal the 2 rear holes.

2.11

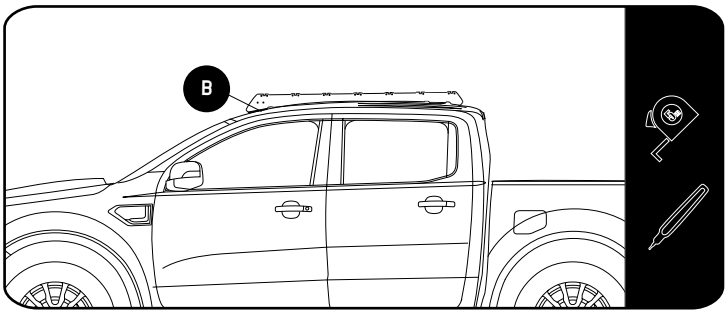

Align the front hole of the Foot Rail with the front hole in the roof (Indicated by B) and mark the centre of each slot in the foot rail on the vehicles roof. Do this with both LH & RH Foot Rails.

Before drilling into the vehicle assemble the Slimsport rack and place it on the vehicle to check for antenna clearance get a friend to help you (2.16).

2.12

Drill the 6 holes you marked earlier, starting with a 4mm pilot hole before going to the 6mm hole. There is no need for a lot of downward pressure. Let the drill do the work.

⚠ **Apply anti-rust to all the holes drilled.**

© 2022 FRONT RUNNER VEHICLE OUTFITTERS

2 FIT AND SECURE

⚠ MODELS WITHOUT FACTORY MOUNTED RAILS

2.13

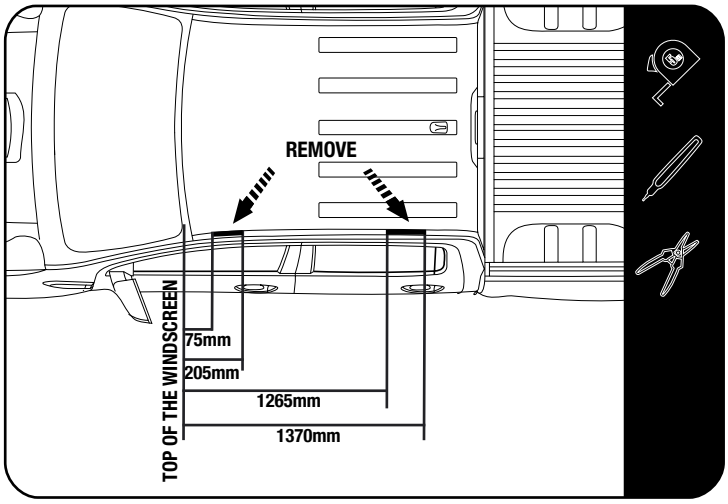

DITCH TRIM OPTION

Starting at the top edge of the vehicle's windscreen, measure and mark the dimensions as shown onto both of the LH & RH ditch trim pieces.

Remove the two trim pieces and cut on each of your markings. Make sure to mark the various pieces so that you are able to place them back in their correct positions.

Refit the ditch trim pieces in place using double sided tape NOT SUPPLIED.

Make sure the ditch & trim is clean before applying the tape.

2.14

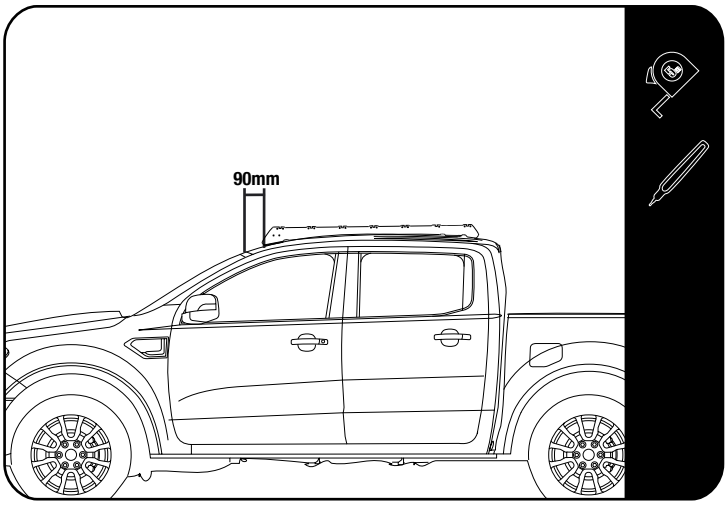

NO TRIM OPTION

Remove the two trim pieces.

Starting at the top edge of the vehicle's windscreen, measure and mark the dimension as shown onto both LH / RH ditch centre's.

Place the foot rail on the vehicles roof lining up the front slot centre with the mark you made and mark the centre of the remaining 3 slots. Do this on both the LH & RH side.

Before drilling into the vehicle assemble the Slimsport rack and place it on the vehicle to check for antenna clearance get a friend to help you (2.16).

2.15

Drill the 8 holes you marked earlier, starting with a 4mm pilot hole before going to the 6mm hole. There is no need for a lot of downward pressure. Let the drill do the work.

⚠ **Apply anti-rust to all the holes drilled.**

© 2022 FRONT RUNNER VEHICLE OUTFITTERS

2.16

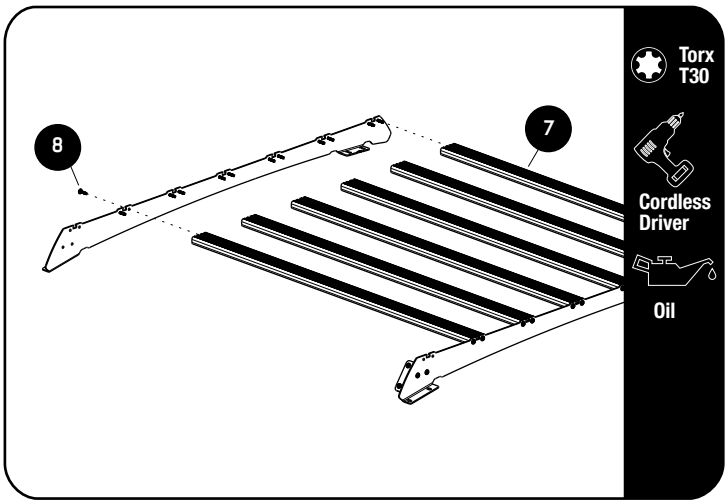

NOTE: Do not fit the front slat yet.

Apply a little oil on screw threads before inserting. Note these are thread forming screws.

Fit 6 Slimsport slats (Item 7) to assembly 2.16 using M6 x 25 Thread Forming Screws (Item 8). Starting from the front to the back, do not fit the front Slat yet.

Tightening Torque 8-10Nm / 5.9 ft lb - 7.38 ft lb. Take care when using a cordless driver.

2.17

Drop the vehicle's Roof Lining.

Look online for videos to assist.

2.18

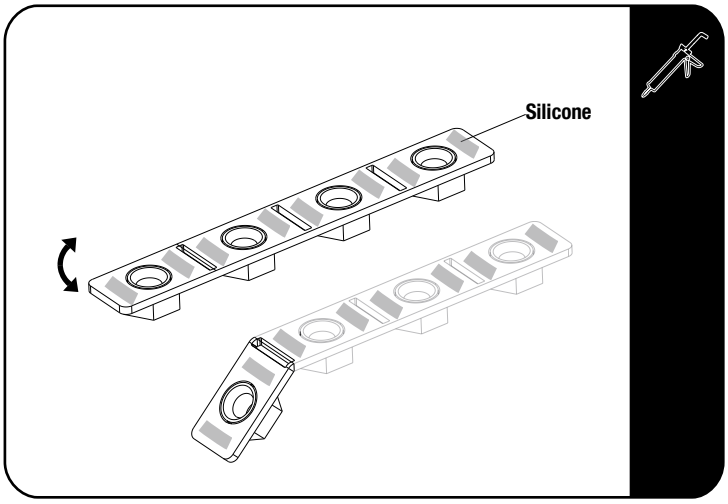

Place a bead of silicone on the nut plates (Item 13) as indicated. This will bond the nut plates in place.

For the first and second hole positions from the front, you can use the nut plate as an assembly tool (2.18) to align with the bolt and loosely assemble.

Twist the nut plate free after tightening and continue to next fixing point.

© 2022 FRONT RUNNER VEHICLE OUTFITTERS

2 FIT AND SECURE

2.19

Clean the area around the holes in the vehicle's roof using a rag and denatured alcohol. Place some silicone around each hole in the vehicle's roof.

Place the spacers as shown in Fig 1.1 in the vehicle's ditch, aligning the cut outs in the spacers with the holes in the vehicle's roof.

Place some silicone in the cut outs of the spacers as shown.

2.20

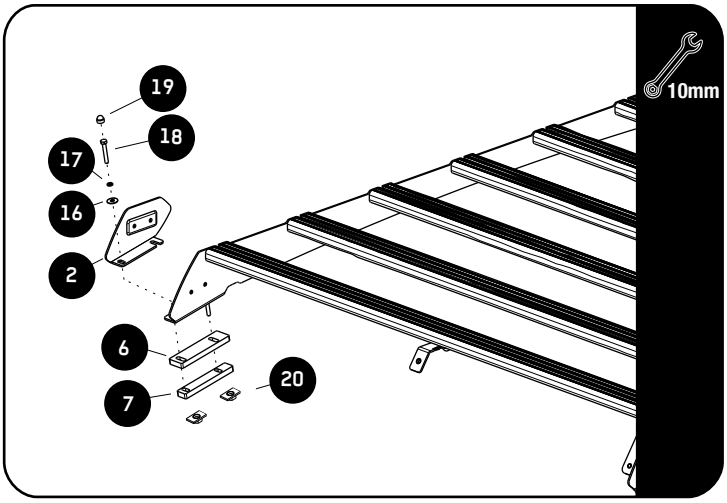

Refer to RRAC191 or RRAC230 before fully tightening Item 2.

Place a bead of silicone along the threads of the M6 x 50 Hex Bolts and secure the rack using M6 x 50 Hex Bolts, M6 Spring Washers, M6 x 19 x 1 Flat Washers, Dimple Plates & Nut Plates (Items 2, 9, 10 & 11).

Have a friend help hold the Nut Plates in position against the roof. Fully tighten.

Place M6 nut caps (Item 19) over all hex bolts. .

 © 2022 FRONT RUNNER VEHICLE OUTFITTERS

2 FIT AND SECURE

2.21 STANDARD WIND FAIRING ASSEMBLY

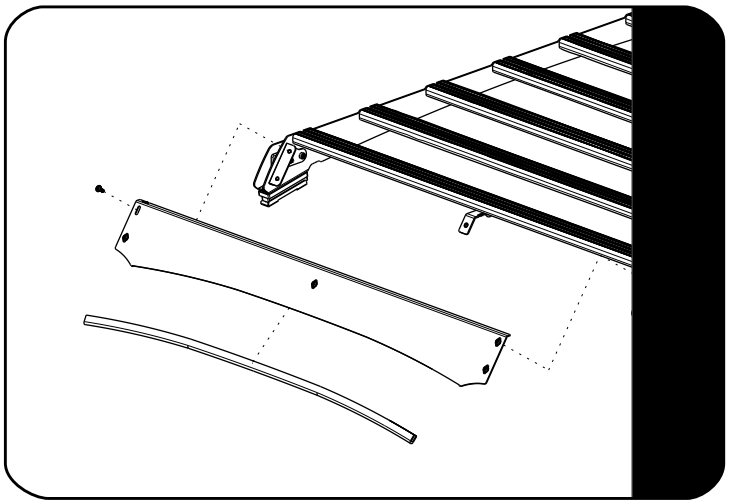

Refer to fitment guide RRAC230

2.22 LIGHT BAR WIND FAIRING ASSEMBLY

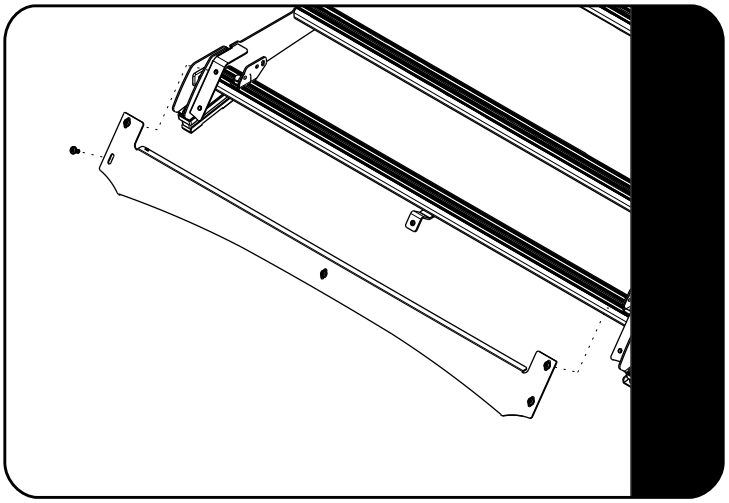

Refer to fitment guide RRAC191

© 2022 FRONT RUNNER VEHICLE OUTFITTERS

3 COMPLETION

3.1 Congratulations! You did it. Take a step back and admire your work!

4 INSTALL OTHER VEHICLE AND RACK ACCESSORIES

Now's the time to visit your favorite Front Runner dealer in person or online.

IMPORTANT! ⚠

FRONT RUNNER RACK KITS OFTEN HAVE A HIGHER LOAD RATING THAN THE VEHICLES THEY ARE MOUNTED TO. PLEASE REFER TO YOUR SPECIFIC VEHICLE MANUFACTURER FOR A RECOMMENDED ROOF RATING. FRONT RUNNER CANNOT BE RESPONSIBLE FOR IMPROPER LOADING BEYOND THE VEHICLE MANUFACTURER'S STATED LOAD CAPACITY.

Be sure to tag us. We love to see our gear in action! #FrontRunnerOutfitters #BornToRoam

Share your adventures on:

© 2022 FRONT RUNNER VEHICLE OUTFITTERS